# RECORD ONLY SUBMITTAL PACKAGE

## CSDG - 5181

**Prepared For:**

**Central States Diesel Generators**
**2001 S Prairie Ave**
**Waukesha, WI 53189-7307**

**THIS SUBMITTAL IS BEING PREPARED FOR RECORD PURPOSES ONLY**

The information presented in this submittal package has been approved

and is provided for record purposes only.

Date: 9/10/2026

Opportunity # 839988

BMS# 487419

Customer PO# 5181 / Signed Quote

**Serving Cummins Customers**
**cummins.com/sales-and-service**

# DISCLAIMER

## Serving Cummins Customers

Cummins power solutions are supported by the largest and best-trained worldwide certified sales/distributor network in the industry. This network will help you select and install the critical power solution to meet the requirements of your specific application. This same network provides experts with advanced technology to make your life easier while providing a seamless support experience.

***IMPORTANT:*** *The critical power solution information and specifications included in this pdf can be used by the site contractor(s) and/or engineer(s) to assist with planning for and accomplishing the overall power solution installation. Please forward this document to the appropriate personnel, as necessary.*

*It is the obligation of the electrical contractor and reviewing engineer to determine that the item quantities and accuracy of this submittal is correct as required for the job. Any inaccuracies or deviations must be addressed with Cummins Inc. before release to manufacturing. Any releases of material to manufacturing by the above parties constitute an acceptance of the accuracy of the submittal. Any changes after release will be viewed as a change order, subject to pricing changes. Please take the time to review this package for accuracy to prevent any after-shipment problems that could cause delay in energization.*

*Cummins certifies that these drawings, material lists, specification and datasheets have been checked prior to submittal and they:*

- *accurately depict the proposed equipment*
- *provide current information to the date of the submittal and*
- *present true and accurate equipment information.*

*This Approval Drawing Package is submitted as our interpretation of the project requirements and/or the specifications for this job. Please note that issuance of these submittals shall not be deemed or interpreted as performance nor acceptance of your purchase order terms and conditions.*

*For questions or comments regarding this submittal, please contact the Cummins Project Manager listed on the title page.*

# TABLE OF CONTENTS

**SECTION 1 - PROJECT INFORMATION**
Bill of Material

**SECTION 2 - GENERATOR SPECIFICATION SHEETS**
Generator Specification Sheet
Generator Data Sheet
PowerCommand Control (PCC) Specification Sheet
Alternator Data Sheet
Sound Data Sheet
Cooling System Data Sheet
EPA Certificate
Exhaust Specifcation Sheet
Prototype Test Summary

**SECTION 3 - GENERATOR ACCESSORIES**
Circuit Breaker Data Sheet and Information
Battery Specification Sheet
Battery Charger Specification Sheet

**SECTION 4 - GENERATOR DRAWINGS & INTERCONNECTS**
Generator and Enclosure Outline Drawing
Foundation Drawing
Fuel Tank Drawing
Circuit Breaker Installation Drawing
Vibration Isolator Drawing
DC Interconnect Wiring Diagram
AC Interconnect Wiring Diagram

**SECTION 5 - WARRANTY**
Generator Warranty Statement

# SECTION 1

## Project Information

## Bill of Material

| Feature Code | Description | Qty |
|---|---|---|
| **C800D6E** | **C800D6E, Commercial Diesel Generator Set, 60Hz, 800 kW (Bundle Product)** | **1** |
| C800 D6E | C800D6E, Diesel Genset, 60Hz, 800 kW | |
| A331-2 | Duty Rating - Standby Power (ESP) | |
| L170-2 | EmissionCert,EPA,Tier 2,NSPS CI Statiory Emergency | |
| L090-2 | Listing - UL 2200 | |
| R002-2 | Voltage - 277/480, 3 Phase, Wye, 4 Wire | |
| BE11-2 | Stator Temperature Rise - 125C | |
| B884-2 | Alternator-60Hz,Wye,480 Volt,125-C,Standby,12Lead | |
| Install-US-Stat | U.S. EPA, Stationary Emergency Application | |
| F202-2 | Housing-QS2,Base Mounted,Steel,with Exhaust | |
| F282-2 | Enclosure Wind Rating, 120 MPH | |
| P175-2 | Enclosure Color - Green, Steel | |
| L163-2 | Listing,ULC-S601-07 | |
| H703-2 | GENSET CONTROL-POWERCOMMAND 2.3 | |
| C345-2 | 1770 Gallon Sub-base Fuel Tank | |
| C346-2 | Fuel fill cap with 6" riser (Universal) | |
| C022-2 | Direct reading mechanical fuel level gauge (Universal) | |
| C351-2 | 2" Tank vent with 10" riser (Universal) | |
| C355-2 | 8" Emergency relief vent with 10" riser (Universal) | |
| C359-2 | Leak detection switch (Universal) | |
| C361-2 | Critical high/low fuel level switch (Universal) | |
| H609-2 | Control Mtg-Left Facing | |
| H606-2 | Meters-AC OutputAlog | |
| H678-2 | Display-Control,LCD | |
| H720-2 | AmpSentryTM Protective Relay | |
| KP74-2 | Stop Switch-Emergency,ExterllyMtd | |
| K020-2 | RUNNING TIME METER | |
| H536-2 | Control Display Language - English | |
| M683-2 | Circuit Breaker or Entrance Box - Single | |
| KU94-2 | CB or EB or TB-Right Only | |

| | | |
|---|---|---|
| M700-2 | Manual Circuit Breaker - Right | |
| KU16-2 | CirBrkr-1200A,Right,3P,600/415V,SS RMS,80%UL/IEC | |
| H712-2 | Indication-Gnd Fault,4-PoleXfrSw,RS | |
| KB72-2 | CB or EB or TB-Bottom Entry, Right | |
| 800ShortC&D | 800ShortC&D | |
| D041-2 | Engine Air Cleaner - Normal Duty | |
| DC02-2 | Air cleaner restriction Indicator - Mechanical | |
| K003-7 | Battery Charger-10A,24V | |
| E074-2 | Eng Cooling-Radiator,50C | |
| H389-2 | Shutdown - Low Coolant Level | |
| H556-2 | Coolant Heater-208/240/480V,40F Minimum Ambient Temp | |
| L312-2 | Genset Warranty - 3 Year Base, 1000 hours | |
| L050-2 | Literature - English | |
| A412-2 | Packing - None, Base Mounted Housing | |

Sales notes have been removed from BOM.

# SECTION 2

## Generator Specifications

# C1000D6ED C750D6E
# C900D6E C600D6E
# C800D6E

## DIESEL GENERATOR SET SPECIFICATION SHEET

**S17 ENGINE, 600-1000 kWe, 60 Hz, EPA TIER 2 NSPS CERTIFIED (STATIONARY EMERGENCY)**

### DESCRIPTION

Cummins commercial generator sets are fully integrated power generation systems for stationary standby power and data center applications.

The Centum™ Series meets the demand for efficient and sustainable power with performance, flexibility, and commitment – for the next generation of power.

### FEATURES

Cummins Heavy-Duty Engine: Rugged, four-cycle industrial diesel delivers reliable power, low emissions and fast response to load changes.

**Alternator:** Several alternator sizes offer selectable motor starting capability with low reactance 2/3 pitch windings, low waveform distortion with non-linear loads, fault clearing short-circuit capability and class H insulation.

**ISO 8528-5 G3 Capable:** Consult factory for site and configuration specific transient performance information.

**HVO Fuel Compatible:** Approved for use with paraffinic fuels (EN15940), including Hydrotreated Vegetable Oil (HVO), which has a very low life cycle carbon emission.

**Permanent Magnet Generator (PMG):** Offers enhanced motor starting and fault clearing short circuit capability.

**Control System:** The PowerCommand® digital control is standard equipment and provides total genset system integration including automatic remote starting/stopping, precise frequency and voltage regulation, alarm and status message display, AmpSentry™ protective relay, output metering, auto-shutdown at fault detection and NFPA 110 Type 10 Level 1 compliance.

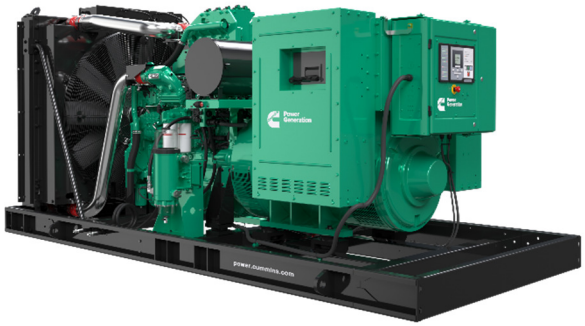

**Cooling System:** enhanced high ambient (50 °C), integral set-mounted radiator systems, designed and tested for rated ambient temperatures, simplifies facility design requirements for rejected heat.

Enclosures**:** Optional weather protective and sound attenuated enclosures are available.

Fuel tanks**:** Dual wall sub-base fuel tanks are also available.

**NFPA:** Capable of meeting NFPA 110 Type 10 for Level 1 Emergency or Standby Power Supply Systems (EPSSs) when installed and operated per Cummins and NFPA guidelines.

**Warranty and Service:** Backed by a standard three-year warranty and worldwide distributor network**.**

### MODELS

| | Emergency Standby Power (ESP) Rating1 kWe (kVA) | Data Sheet |
|---|---|---|
| **C1000D6ED** | 1000 (1250) | D-6787 |
| **C900D6E** | 900 (1125) | D-6809 |
| **C800D6E** | 800 (1000) | D-6788 |
| **C750D6E** | 750 (938) | D-6810 |
| **C600D6E** | 600 (750) | D-6789 |

[1] All ratings include radiator fan losses


©2025 Cummins Inc.

Centum™ SERIES GENERATORS

## GENERATOR SET SPECIFICATIONS

| | |
|---|---|
| Performance class | Genset models have been tested in accordance with ISO 8528-5. Consult factory for transient performance information |
| Voltage regulation, no load to full load | ± 1.0% |
| Random voltage variation | ± 1.0% |
| Frequency regulation | Isochronous |
| Random frequency variation | ± 0.5% |
| Electromagnetic compatibility performance | Emissions to EN 61000-6-2:2005<br>Immunity to EN 61000-6-4:2007+A1:2011<br>Complies with FCC PART 15 subpart B and ICES-002 |

## ENGINE SPECIFICATIONS

| | |
|---|---|
| Bore | 148 mm (5.83 in) |
| Stroke | 163 mm (6.42 in) |
| Displacement | 16.8 L (1025 $in^3$) |
| Configuration | Four-cycle; in-line; 6-cylinder |
| Battery capacity | 1700 A minimum at ambient temperature of -18 °C (0 °F) to 0 °C (32 °F) |
| Battery charging alternator | 105 A |
| Starting voltage | 24 V, negative ground |
| Fuel system | XPI |
| Fuel filter | One-stage, spin-on fuel filter and water separator system. Generator set mounted, 5 µm nanonet element filter |
| Air cleaner | One unhoused, dry replaceable elements standard; heavy-duty optional |
| Lube oil filter | Two spin-on, combination full flow filter and bypass filters |
| Standard cooling system | High ambient (40 °C) cooling system; Enhanced high ambient (50 °C) Optional |

## ALTERNATOR SPECIFICATIONS

| | |
|---|---|
| Design | Brushless, 4-pole, drip proof, revolving field |
| Stator | 2/3 pitch |
| Rotor | One bearing, Close coupled flex plate |
| Insulation system | Class H |
| Standard temperature rise | 150 °C standby at 40 °C ambient |
| Exciter type | Permanent Magnet Generator (PMG) |
| Phase rotation | A (U), B (V), C (W) |

## AVAILABLE VOLTAGES (60 Hz LINE-TO-NEUTRAL / LINE-TO-LINE)[5]

- 120/208
- 127/220
- 220/380
- 240/416
- 255/440
- 277/480
- 347/600
- 

[5] Additional voltages may be available; contact your Cummins distributor

## GENERATOR SET OPTIONS AND ACCESSORIES[6]

**Engine**
- 208 V and 240V, 1 Phase, 5 kW thermosiphon coolant heater
- Heavy-duty air cleaners

**Cooling System**
- Enhanced high ambient (50 °C)

**Exhaust System**
- Residential grade silencer
- Critical grade silencer

**Control Panel**
- Masterless load demand
- Multiple language support
- Front, left, and right mounting
- Warning high bearing temperature
- Alternator temp. monitoring
- Exhaust gas temp. monitoring
- 4-6x user-configurable relays
- 120 / 240 V heater control cabinet
- Mechanical hour meter
- 2x digital input/output

**Alternator**
- 80, 105,125, & 150 °C rise
- 120 or 240 V, 285/255 W anti-condensation heater

- **Alternator (cont.)**
- Temp. sensor - RTDs, 2 / phase
- Temp. sensor - alternator bearing RTD
- Differential current transformers

**Generator Set**
- Battery
- PowerCommand® network
- Remote annunciator panel
- Standby 3-, 4- and 5-year limited hour warranties

[6] Some options may not be available on all models; contact your Cummins distributor.


Bulletin S-6786 PD00003237 Produced in U.S.A. (Rev. 7/25)
©2025 Cummins Inc.

Centum™ SERIES GENERATORS

# PowerCommand® ~~3.3~~

## CONTROL SYSTEM DESCRIPTION

The PowerCommand® 3.3 is an integrated, microprocessor-based, generator set control system providing voltage regulation, engine protection, alternator protection, operator interface and isochronous governing. Refer to document S-1570 for more detailed information on the control.

**AmpSentry™:** Includes integral AmpSentry™ protection, which provides a full range of alternator protection functions that are matched to the alternator provided.

**Power Management:** Control function provides battery monitoring and testing features and smart starting control system.

**Advanced Control Methodology:** Three phase sensing, full wave rectified voltage regulation, with a PWM output for stable operation with all load types.

**Communications Interface:** Control comes standard with PCCNet and Modbus interface.

**Service:** InPower™ PC-based service tool available for detailed diagnostics, setup, data logging and fault simulation.

**Easily Upgradeable:** PowerCommand® controls are designed with common control interfaces.

**Reliable Design:** The control system is designed for reliable operation in harsh environment.

**Multi-Language Support**

## OPERATOR PANEL FEATURES

**Operating/Display Functions**

- Displays paralleling breaker status
- Provides direct control of the paralleling breaker
- 320 x 240 pixels graphic LED backlight LCD
- Auto, manual, start, stop, fault reset and lamp test/panel lamp switches
- Alpha-numeric display with pushbuttons
- LED lamps indicating genset running, remote start, not in auto, common shutdown, common warning, manual run mode, auto mode and stop

**Paralleling Control Functions**

- First Start Sensor™ system selects first genset to close to bus
- Phase lock loop synchronizer with voltage matching
- Sync check relay
- Isochronous kW and kVAR load sharing
- Load govern control for utility paralleling
- Extended paralleling (base load/peak shave) mode
- Digital power transfer control, for use with a breaker pair to provide open transition, closed transition, ramping closed transition, peaking and base load functions

**Alternator Data**

- Line-to-Neutral and Line-to-Line AC volts
- 3-phase AC current
- Frequency
- kW, kVAR, power factor kVA (three-phase and total)

**Engine Data**

- DC voltage
- Engine speed
- Lube oil pressure and temperature

**Engine Data Cont'd**

- Coolant temperature

- Comprehensive FAE data (where applicable)

## OPERATOR PANEL FEATURES (CONT.)

**Other Data**

- Genset model data
- Start attempts, starts, running hours, kWh
- Load profile (operating hours at #load in 5% increments)
- Fault history
- Data logging and fault simulation (requires InPower™)

## STANDARD CONTROL FEATURES

**Digital Governing**

- Integrated digital electronic isochronous governor
- Temperature dynamic governing

**Digital Voltage Regulation**

- Integrated digital electronic voltage regulator
- 3-phase, 4-wire Line-to-Line sensing
- Configurable torque matching

**AmpSentry™ AC Protection**

- AmpSentry™ protective relay
- Over current and short circuit shutdown
- Over current warning
- Single and three phase fault regulation
- Over and under voltage shutdown
- Over and under frequency shutdown
- Overload warning with alarm contact
- Reverse power and reverse Var shutdown
- Field overload shutdown

**Engine Protection**

- Battery voltage monitoring, protection, and testing
- Overspeed shutdown
- Low oil pressure warning and shutdown
- High coolant temperature warning and shutdown
- Low coolant level warning or shutdown
- Fail to start (overcrank) shutdown
- Fail to crank shutdown
- Cranking lockout
- Sensor failure indication
- Full authority electronic engine protection

**Control Functions**

- Time delay start and cool down
- Real time clock for fault and event time stamping
- Exerciser clock and time of day start/stop
- Data logging
- Cycle cranking
- 2Load shed
- Configurable inputs and outputs (4)
- Remote emergency stop

**Options**

- Auxiliary output relays (2)



Bulletin S-6786 PD00003237 Produced in U.S.A. (Rev. 7/25)

©2025 Cummins Inc.

Centum™ SERIES GENERATORS

## RATING DEFINITIONS

Emergency Standby Power (ESP)

Applicable for supplying power to varying electrical loads for the duration of power interruption of a reliable utility source. Emergency Standby Power (ESP) is in accordance with ISO 8528. Data shown above represents gross engine performance and capabilities as per ISO 3046-1, obtained and corrected in accordance with ISO 15550.

## GENERATOR SET DIMENSIONS AND WEIGHTS[7]

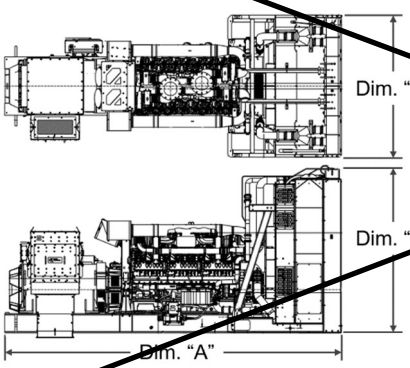


| Model Name | Dim. "A" mm (in) | Dim. "B" mm (in) | Dim. "C" mm (in) |
|---|---|---|---|
| C1000D6ED | 4028 (159) | 1890 (74) | 2099 (83) |
| C900D6E | | | |
| C800D6E | | | |
| | | 1890 (74) | 2099 (83) |

**Refer to drawings for specific weights and dimensions**

| Model Name | Generator Set Weight (Dry) kg (lb) | Generator Set Weight (Wet) kg (lb) |
|---|---|---|
| C1000D6ED | 6143 (13543) | 6246 (13770) |
| C900D6E | | |
| C800D6E | | |
| C750D6E | | |
| C600D6E | 5780 (12743) | 5883 (12970) |

[7] Do not use for installation design. Longest alternator (F-core) used for dimension "A". All weights are approximate and represent a generator set with standard features and heaviest alternator (low voltage F-core). "As Shipped Set Weight (No Cooling System)"includes weight from engine oil. "Installed Set Weight (Wet)" includes weight from engine oil and coolant. See respective model data sheet for specific model outline drawing number that contains weights of other configurations.

## CODES AND STANDARDS[8]

| | | | |
|---|---|---|---|
| ISO 9001<br>ISO 14001<br>ISO 45001 | This product was manufactured in a facility whose quality management system is certified to ISO 9001 and its Health Safety Environmental Management Systems certified to ISO 14001 and ISO 45001. | UL LISTED | UL Listing to UL 2200, "Stationary Engine Generator Assemblies" is available for this genset model. The PowerCommand® control is listed to UL 508 – Category NITW7 for U.S. and Canadian usage. |
| PROTOTYPE TEST SUPPORTED PTS | The Prototype Test Support (PTS) program verifies the performance integrity of the generatorset design. Cummins products bearing the PTS symbol meet the prototype test requirements of NFPA 110 Type 10 Level 1 compliance. | UNITED STATES ENVIRONMENTAL PROTECTION AGENCY | Engine certified to Stationary Emergency U.S. EPA New Source Performance Standards (NSPS), 40 CFR 60 subpart IIII Tier 2 exhaust emission levels. U.S. applications must be applied per this EPA regulation. |
| CSA® | All genset models are available as CSA certifiedto CSA C22.2 No. 100. | IBC INTERNATIONAL BUILDING CODE® | The generator set package is available certified for seismic application in accordance with International Building Code and California building code for healthcare application (OSP). |

[8] Codes or standards compliance may not be available with all model configurations; contact your Cummins distributor



©2025 Cummins Inc.

# C800D6E

## DIESEL GENERATOR SET DATA SHEET

| | |
|---|---|
| **MODEL:** | **C800D6E** |
| **FREQUENCY:** | **60 Hz** |
| **FUEL TYPE:** | **DIESEL** |
| **RATING:** | **800 kWe (1000kVA) EMERGENCY STANDBY POWER (ESP)[1]** |
| **EMISSIONS CERTIFICATION:** | **EPA TIER 2 NSPS (STATIONARY EMERGENCY)** |

| GENERATOR SET PUBLICATIONS | |
|---|---|
| Exhaust emission data sheet | EDS-3160 |
| Exhaust emission compliance statement | EPA-2112 |
| Sound data sheet | MSP-4197 |
| Cooling system data sheet | MCP-2303 |
| Seismic certificate of compliance | VMA-50957-01C |
| Prototype test support data sheet | PTS-832 |
| Genset outline drawing | A074S111 |
| Genset wiring schematic diagram | A073D300 |

| ENGINE SPECIFICATIONS | | |
|---|---|---|
| Manufacturer | | Cummins Inc. |
| Model | | S17-G1 |
| Configuration | | Four-cycle; inline; 6-cylinder |
| Aspiration | | Turbocharged and charge-air cooled |
| Gross engine power output | kWm (bhp) | 1099 (1474) |
| Brake mean effective pressure at set rated load | kPa (psi) | 3510 (509) |
| Bore | mm (in) | 148 (5.83) |
| Stroke | mm (in) | 163 (6.42) |
| Displacement | L ($in^3$) | 16.8 (1031) |
| Rated speed | rpm | 1800 |
| Piston speed at rated speed | m/s (ft/min) | 9.78 (1925) |
| Compression ratio | | 14.5:1 |
| Lube oil capacity | L (US gal) | 79 (21) |
| Overspeed limit | rpm | 2100 |
| Regenerative power | kWm (hp) | 100 (134) |

| FUEL CONSUMPTION | | | | | |
|---|---|---|---|---|---|
| Rating | kWe (kVA) | 800 (1000) | | | |
| Load | | 25% | 50% | 75% | 100% |
| Fuel Consumption | US gph | 16.9 | 30.6 | 43.7 | 57.4 |
| Fuel Consumption | L/h | 64 | 116 | 165 | 217 |

[1] Generator set ratings include radiator fan losses


©2025 Cummins Inc.

Centum™ SERIES GENERATORS

| FUEL SYSTEM | | |
|---|---|---|
| Maximum fuel flow | L/h (US gph) | 398 (105) |
| Maximum fuel inlet restriction, clean/dirty | kPa (inHg) | 17 (5) / 34 (10) |
| Maximum fuel inlet temperature | °C (°F) | 70 (158) |
| Maximum fuel return restriction | kPa (inHg) | 35 (10) |

| AIR SYSTEM | | |
|---|---|---|
| Combustion air flow (at set rated load) | $m^3$/min (scfm) | 70.4 (2487) |
| Maximum air cleaner restriction (dirty filter) | kPa (inH2O) | 5.4 (22) |
| Alternator cooling air flow | $m^3$/min (cfm) | 97.8 (3454) |

| EXHAUST SYSTEM | | |
|---|---|---|
| Exhaust flow (at set rated load) | $m^3$/min (cfm) | 167 (5895) |
| Exhaust temperature (at set rated load) | °C (°F) | 446 (834) |
| Maximum back pressure | kPa ($inH_2O$) | 6.8 (27.3) |

| COOLING SYSTEM (SET MOUNTED) – ENHANCED HIGH AMBIENT | | |
|---|---|---|
| Ambient design (limiting ambient temp.) | °C (°F) | 50.0 (122.0) |
| Maximum air flow static restriction | kPa ($inH_2O$) | 0.25 (1.0) |
| Cooling system air flow (at max. restriction) | $m^3$/min (acfm) | 1512 (53400) |
| Fan load | kWm (hp) | 39 (52) |
| Coolant capacity (engine + radiator) | L (US gal) | 141 (37.2) |

| GENERATOR SET WEIGHTS[6] | | |
|---|---|---|
| C800D6E | kg (lb) | **Refer to drawings for specific weights and dimensions** |

[6] All weights are approximate and represent a generator set with standard features and heaviest alternator (F-core). "As Shipped Set Weight (Dry)" does not include weight from engine oil. "Installed Set Weight (Wet)" includes weight from engine oil and coolant. See respective model data sheet for specific model outline drawing number that contains weights of other configurations.

| GENERATOR SET DERATING FACTORS[7] | |
|---|---|
| **Emergency Standby Power (ESP)** | **High Ambient Cooling System:** Full genset power available up to 3377 m (11079 ft) at ambient temperatures up to 40 °C (104 °F). Above these conditions, derate at 2% per 305 m (1000 ft) and 9.1% per 10 °C (18 °F). **Enhanced High Ambient Cooling System:** Full genset power available up to 2429 m (7970 ft) at ambient temperatures up to 50 °C (122 °F). Above these conditions, derate at 2.8% per 305 m (1000 ft) and 11.3% per 10 °C (18 °F). |

[7] Ambient operating temperature is defined as the air temperature measured at the turbocharger compressor inlet. Derate statements assume a cooling system with 0.25 kPa (1.0 $inH_2O$) backpressure and 50% relative humidity. Please contact Sales Application Engineering for operation above 3500 m (11480 ft) of altitude or outside of the temperature range in the derate statement.

| RATING DEFINITIONS | |
|---|---|
| **Emergency Standby Power (ESP):** | Applicable for supplying power to varying electrical loads for the duration of power interruption of a reliable utility source. Emergency Standby Power (ESP) is in accordance with ISO 8528. Data shown above represents gross engine performance and capabilities as per ISO 3046-1, obtained and corrected in accordance with ISO 15550. |

[8] Alternator data is configured for a set with ratings including engine cooling fan losses and standard features at 40 °C ambient temperature. For non-standard configurations check appropriate alternator data sheets or contact your Cummins distributor. N/A: Not Applicable
[9] ESP: Emergency Standby Power
[10] Maximum surge: maximum rated starting kVA that results in a minimum of 90% of rated sustained voltage during starting


©2025 Cummins Inc.

## ALTERNATOR DATA[8] (ESP: 800 kWe)

| Voltage | Connection | Winding Number | Ambient Temp. (°C) | Temp. Rise (°C) | Duty Rating[9] | Model | Max. Surge[10] (kVA) | Alternator Data Sheet | Feature Code |
|---|---|---|---|---|---|---|---|---|---|
| 208 | Wye;3-phase | 311 | 40 | 80 | ESP | S6L1D-F4 | 4725 | ADS-633 | B734 |
| 208 | Wye;3-phase | 311 | 40 | 105 | ESP | S6L1D-E4 | 4200 | ADS-632 | B873 |
| 208 | Wye;3-phase | 311 | 40 | 125 | ESP | S6L1D-D4 | 3657 | ADS-631 | B732 |
| 208 | Wye;3-phase | 311 | 40 | 150 | ESP | S6L1D-D4 | 3657 | ADS-631 | BE82 |
| 220 | Wye;3-phase | 311 | 40 | 80 | ESP | S6L1D-F4 | 4725 | ADS-633 | BE85 |
| 220 | Wye;3-phase | 311 | 40 | 105 | ESP | S6L1D-E4 | 4200 | ADS-632 | BC41 |
| 220 | Wye;3-phase | 311 | 40 | 125 | ESP | S6L1D-D4 | 3657 | ADS-631 | B975 |
| 220 | Wye;3-phase | 311 | 40 | 150 | ESP | S6L1D-C4 | 3264 | ADS-630 | BE82 |
| 380 | Wye;3-phase | 13 | 40 | 80 | ESP | S6L1D-F4 | 4725 | ADS-633 | B870 |
| 380 | Wye;3-phase | 14 | 40 | 105 | ESP | S6L1D-E4 | 3975 | ADS-632 | BC43 |
| 380 | Wye;3-phase | 14 | 40 | 125 | ESP | S6L1D-D4 | 3657 | ADS-631 | B872 |
| 380 | Wye;3-phase | 14 | 40 | 150 | ESP | S6L1D-D4 | 3657 | ADS-631 | B769 |
| 400 | Wye;3-phase | 13 | 40 | 80 | ESP | S6L1D-F4 | 4725 | ADS-633 | B977 |
| 400 | Wye;3-phase | 311 | 40 | 105 | ESP | S6L1D-E4 | 4200 | ADS-632 | BC42 |
| 400 | Wye;3-phase | 14 | 40 | 125 | ESP | S6L1D-D4 | 3657 | ADS-631 | BC40 |
| 400 | Wye;3-phase | 311 | 40 | 150 | ESP | S6L1D-D4 | 3657 | ADS-631 | BE13 |
| 416 | Wye;3-phase | 311 | 40 | 80 | ESP | S6L1D-F4 | 4725 | ADS-633 | B734 |
| 416 | Wye;3-phase | 311 | 40 | 105 | ESP | S6L1D-E4 | 4200 | ADS-632 | B873 |
| 416 | Wye;3-phase | 311 | 40 | 125 | ESP | S6L1D-D4 | 3657 | ADS-631 | B732 |
| 416 | Wye;3-phase | 311 | 40 | 150 | ESP | S6L1D-D4 | 3657 | ADS-631 | B682 |
| 440 | Wye;3-phase | 311 | 40 | 80 | ESP | S6L1D-F4 | 4725 | ADS-633 | B688 |
| 440 | Wye;3-phase | 311 | 40 | 105 | ESP | S6L1D-E4 | 4200 | ADS-632 | BC41 |
| 440 | Wye;3-phase | 311 | 40 | 125 | ESP | S6L1D-D4 | 3657 | ADS-631 | B975 |
| 440 | Wye;3-phase | 311 | 40 | 150 | ESP | S6L1D-D4 | 3657 | ADS-631 | B701 |
| 480 | Wye;3-phase | 311 | 40 | 80 | ESP | S6L1D-E4 | 4200 | ADS-632 | B878 |
| 480 | Wye;3-phase | 311 | 40 | 105 | ESP | S6L1D-D4 | 3657 | ADS-631 | B876 |
| 480 | Wye;3-phase | 311 | 40 | 125 | ESP | S6L1D-C4 | 3264 | ADS-630 | B884 |
| 480 | Wye;3-phase | 311 | 40 | 150 | ESP | S6L1D-C4 | 3264 | ADS-630 | B769 |
| 600 | Wye;3-phase | 7 | 40 | 80 | ESP | S6L1D-E4 | 4200 | ADS-632 | B604 |
| 600 | Wye;3-phase | 7 | 40 | 105 | ESP | S6L1D-E4 | 4200 | ADS-632 | B839 |
| 600 | Wye;3-phase | 7 | 40 | 125 | ESP | S6L1D-C4 | 3264 | ADS-630 | B739 |
| 600 | Wye;3-phase | 7 | 40 | 150 | ESP | S6L1D-C4 | 3264 | ADS-630 | BD50 |

## FORMULAS

### Calculating Power Factor

$$\cos\theta = \frac{Active\ (True, Real)\ Power}{Apparent\ Power} = \frac{P_{(kW)}}{|S|_{(kVA)}}$$

Power Factor = 0.8 (industry standard)

### Calculating Full Load Current (Three Phase AC Output)

$$I = \frac{|S|_{(kVA)}}{\sqrt{3} \times V} = \frac{1000 \times P_{(kW)}}{\sqrt{3} \times V \times \cos\theta}$$

### Calculating Full Load Current (Single Phase AC Output)

$$I = \frac{|S|_{(kVA)}}{V} = \frac{1000 \times P_{(kW)}}{V \times \cos\theta}$$


©2025 Cummins Inc.

Centum SERIES GENERATORS

Specification Sheet

# PowerCommand® 2.3 Control System

## Control System Description

The PowerCommand control system is a microprocessor-based generator set monitoring, metering and control system designed to meet the demands of today's engine driven generator sets. The integration of all control functions into a single control system provides enhanced reliability and performance, compared to conventional generator set control systems. These control systems have been designed and tested to meet the harsh environment in which gensets are typically applied.

## Features

- 320 x 240 pixels graphic LED backlight LCD.
- Multiple language support.
- AmpSentry™ protective relay - true alternator overcurrent protection.
- Real time clock for fault and event time stamping.
- Exerciser clock and time of day start/stop.
- Digital voltage regulation. Three phase full wave FET type regulator compatible with either shunt or PMG systems.
- Generator set monitoring and protection.
- 12 and 24 VDC battery operation.
- Modbus® interface for interconnecting to customer equipment.
- Warranty and service. Backed by a comprehensive warranty and worldwide distributor service network.
- Certifications - suitable for use on generator sets that are designed, manufactured, tested and certified to relevant UL, NFPA, ISO, IEC, Mil Std., CE, UKCA and CSA standards.


©2019 Cummins Inc. | PDS-1569 | PD00000157 | (01/26)

# PowerCommand Digital Genset Control PCC 2300

## Description

The PowerCommand generator set control is suitable for use on a wide range of generator sets in non-paralleling applications. The PowerCommand control is compatible with shunt or PMG excitation style. It is suitable for use with reconnectable or non-reconnectable generators, and it can be configured for any frequency, voltage and power connection from 120-600 VAC Line-to-Line.

Power for this control system is derived from the generator set starting batteries. The control functions over a voltage range from 8 VDC to 30 VDC.

## Features

- 12 and 24 VDC battery operation.
- Digital voltage regulation - Three phase full wave FET type regulator compatible with either shunt or PMG systems. Sensing is three phase.
- Full authority engine communications (where applicable) - Provides communication and control with the Engine
- due to thermal Control Module (ECM).
- AmpSentry" protection provides industry-leading alternator overcurrent protection:
  - Time-based generator protection applicable to both line-to-line and line-to-neutral, that can detect an unbalanced fault condition and swiftly react appropriately. Balanced faults can also be detected by AmpSentry and appropriate acted upon.
- Reduces the risk of Arc Flash overload or electrical faults by inverse time protection
- Common harnessing - with higher feature Cummins controls. Allows for easy field upgrades.
- Generator set monitoring - Monitors status of all critical engine and alternator functions.
- Digital genset metering (AC and DC).
- Genset battery monitoring system to sense and warn against a weak battery condition.
- Configurable for single or three phase AC metering.
- Engine starting - Includes relay drivers for starter, Fuel Shut Off (FSO), glow plug/spark ignition power and switch B+ applications.
- Generator set protection – Protects engine and alternator.
- Real time clock for fault and event time stamping.
- Exerciser clock and time of day start/stop.
- Advanced serviceability - using InPower™, a PC-based software service tool.
- Environmental protection - The control system is designed for reliable operation in harsh environments. The main control board is a fully encapsulated module that is protected from the elements.
- Modbus interface for interconnecting to customer equipment.
- Configurable inputs and outputs - Four discrete inputs and four dry contact relay outputs.
- Warranty and service - Backed by a comprehensive warranty and worldwide distributor service network.
- Certifications - Suitable for use on generator sets that are designed, manufactured, tested and certified to relevant UL, NFPA, ISO, IEC, Mil Std., CE and CSA standards.

## Base Control Functions

### HMI Capability

Operator adjustments - The HMI includes provisions for many set up and adjustment functions.

Generator set hardware data - Access to the control and software part number, generator set rating in kVA and generator set model number is provided from the HMI or InPower.

Data logs - Includes engine run time, controller on time, number of start attempts, total kWh, and load profile (control logs data indicating the operating hours at percent of rated kW load, in 5% increments. The data is presented on the operation panel based on total operating hours on the generator.)

Fault history - Provides a record of the most recent fault conditions with control date and time stamp. Up to 32 events are stored in the control non-volatile memory.

Alternator data

- Voltage (single or three phase Line-to-Line and Line-to-Neutral)
- Current (single or three phase)
- kW, kVar, power factor, kVA (three phase and total)
- Frequency

AmpSentry: 3x current regulation for downstream tripping/motor inrush management. Thermal damage curve (3-phase short) or fixed timer (2 sec for 1- Phase Short or 5 sec for 2-Phase short).

Engine data

- Starting battery voltage
- Engine speed
- Engine temperature
- Engine oil pressure
- Engine oil temperature
- Intake manifold temperature
- Comprehensive Full Authority Engine (FAE) data (where applicable)

Service adjustments - The HMI includes provisions for adjustment and calibration of generator set control functions. Adjustments are protected by a password. Functions include:


©2019 Cummins Inc. | PDS-1569 | PD00000157 | (01/26)

Service adjustments (continued)

- Engine speed governor adjustments
- Voltage regulation adjustments
- Cycle cranking
- Configurable fault set up
- Configurable output set up
- Meter calibration
- Display language and units of measurement

### Engine Control

SAE-J1939 CAN interface to full authority ECMs (where applicable). Provides data swapping between genset and engine controller for control, metering and diagnostics.

12 VDC/24 VDC battery operations - PowerCommand will operate either on 12 VDC or 24 VDC batteries.

Temperature dependent governing dynamics (with electronic governing) - modifies the engine governing control parameters as a function of engine temperature. This allows the engine to be more responsive when warm and more stable when operating at lower temperature levels.

Isochronous governing - (where applicable) Capable of controlling engine speed within +/-0.25% for any steady state load from no load to full load. Frequency drift will not exceed +/-0.5% for a 33 °C (60 °F) change in ambient temperature over an 8 hour period.

Remote start mode - It accepts a ground signal from remote devices to automatically start the generator set and immediately accelerate to rated speed and voltage. The remote start signal will also wake up the control from sleep mode. The control can incorporate a time delay start and stop.

Remote and local emergency stop - The control accepts a ground signal from a local (genset mounted) or remote (facility mounted) emergency stop switch to cause the generator set to immediately shut down. The generator set is prevented from running or cranking with the switch engaged. If in sleep mode, activation of either emergency stop switch will wakeup the control.

Sleep mode - The control includes a configurable low current draw state to minimize starting battery current draw when the genset is not operating. The control can also be configured to go into a low current state while in auto for prime applications or applications without a battery charger.

Engine starting - The control system supports automatic engine starting. Primary and backup start disconnects are achieved by one of two methods: magnetic pickup or main alternator output frequency. The control also supports configurable glow plug control when applicable.

Cycle cranking - Is configurable for the number of starting cycles (1 to 7) and duration of crank and rest periods. Control includes starter protection algorithms to prevent the operator from specifying a starting sequence that might be damaging.

Time delay start and stop (cooldown) - Configurable for time delay of 0-300 seconds prior to starting after receiving a remote start signal and for time delay of 0-600 seconds prior to shut down after signal to stop in normal operation modes. Default for both time delay periods is 0 seconds.

### Alternator Control

The control includes an integrated three phase Line-to-Line sensing voltage regulation system that is compatible with shunt or PMG excitation systems. The voltage regulation system is a three phase full wave rectified and has an FET output for good motor starting capability.

Major system features include:

Digital output voltage regulation - Capable of regulating output voltage to within +/-1.0% for any loads between no load and full load. Voltage drift will not exceed +/- 1.5% for a 40 ºC (104 ºF) change in temperature in an eight hour period. On engine starting or sudden load acceptance, voltage is controlled to a maximum of 5% overshoot over nominal level. The automatic voltage regulator feature can be disabled to allow the use of an external voltage regulator.

Torque-matched V/Hz overload control - The voltage roll-off set point and rate of decay (i.e. the slope of the V/Hz curve) is adjustable in the control.

Fault current regulation - PowerCommand will regulate the output current on any phase to a maximum of three times rated current under fault conditions for both single phase and three phase faults. In conjunction with a permanent magnet generator, it will provide three times rated current on all phases for motor starting and short circuit coordination purpose.

## Protective Functions

On operation of a protective function the control will indicate a fault by illuminating the appropriate status LED on the HMI, as well as display the fault code and fault description on the LCD. The nature of the fault and time of occurrence are logged in the control. The service manual and InPower service tool provide service keys and procedures based on the service codes provided.

Protective functions include:

### Battle Short Mode

When enabled and the *battle short* switch is active, the control will allow some shutdown faults to be bypassed. If a bypassed shutdown fault occurs, the fault code and description will still be annunciated, but the genset will not shutdown. This will be followed by a *fail to shutdown* fault. Emergency stop shutdowns and others that are critical for proper operation are not bypassed. Please refer to the control application guide or manual for list of these faults.


©2019 Cummins Inc. | PDS-1569 | PD00000157 | (01/26)

## Derate

The derate function reduces output power of the genset in response to a fault condition. If a derate command occurs while operating on an isolated bus, the control will issue commands to reduce the load on the genset via contact closures or modbus.

## Configurable Alarm and Status Inputs

The control accepts up to four alarm or status inputs (configurable contact closed to ground or open) to indicate a configurable (customer-specified) condition.

The control is programmable for warning, shutdown or status indication and for labeling the input.

## Emergency Stop

Annunciated whenever either emergency stop signal is received from external switch.

## Full Authority Electronic Engine Protection

Engine fault detection is handled inside the engine ECM. Fault information is communicated via the SAE-J1939 data link for annunciation in the HMI.

## General Engine Protection

Low and high battery voltage warning - Indicates status of battery charging system (failure) by continuously monitoring battery voltage.

Weak battery warning - The control system will test the battery each time the generator set is signaled to start and indicate a warning if the battery indicates impending failure.

Fail to start (overcrank) shutdown - The control system will indicate a fault if the generator set fails to start by the completion of the engine crack sequence.

Fail to crank shutdown - Control has signaled starter to crank engine but engine does not rotate.

Cranking lockout - The control will not allow the starter to attempt to engage or to crank the engine when the engine is rotating.

## Alternator Protection

AmpSentry protective relay - A comprehensive monitoring and control system integral to the PowerCommand Control System that guards the electrical integrity of the alternator and power system by providing protection against a wide array of fault conditions in the generator set or in the load. It also provides single and three phase fault current regulation so that downstream protective devices have the maximum current available to quickly clear fault conditions without subjecting the alternator to potentially catastrophic failure conditions. Thermal damage curve (3-Phase short) or fixed timer (2 sec for 1-Phase short, 5 sec for 2-Phase short). See document R1053 for a full-size time over current curve.

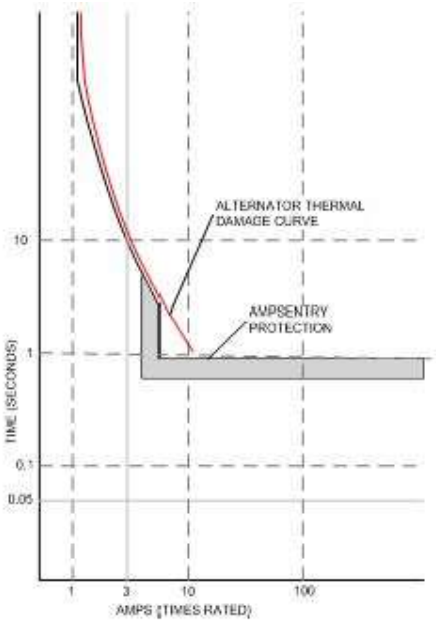


AmpSentry Maintenance Mode (AMM) - Instantaneous tripping, if AmpSentry Maintenance mode is active (50mS response to turn off AVR excitation/shutdown genset) for arc flash reduction when personnel are near genset.

High AC voltage shutdown (59) - Output voltage on any phase exceeds preset values. Time to trip is inversely proportional to amount above threshold. Values adjustable from 105-125% of nominal voltage, with time delay adjustable from 0.1-10 seconds. Default value is 110% for 10 seconds.

Low AC voltage shutdown (27) - Voltage on any phase has dropped below a preset value. Adjustable over a range of 50-95% of reference voltage, time delay 2-20 seconds. Default value is 85% for 10 seconds. Function tracks reference voltage. Control does not nuisance trip when voltage varies due to the control directing voltage to drop, such as during a V/Hz roll-off during synchronizing.

Under frequency shutdown (81 u) - Generator set output frequency cannot be maintained. Settings are adjustable from 2-10 Hz below reference governor set point, for a 5- 20 second time delay. Default: 6 Hz, 10 seconds.

Under frequency protection is disabled when excitation is switched off, such as when engine is operating in idle speed mode.

Over frequency shutdown/warning (81 o) - Generator set is operating at a potentially damaging frequency level. Settings are adjustable from 2-10 Hz above nominal governor set point for a 1-20 second time delay. Default: 6 Hz,
20 seconds, disabled.


©2019 Cummins Inc. | PDS-1569 | PD00000157 | (01/26)

Overcurrent warning/shutdown - Thresholds and time delays are configurable. Implementation of the thermal damage curve with instantaneous trip level calculated based on current transformer ratio and application power rating.

Loss of sensing voltage shutdown - Shutdown of generator set will occur on loss of voltage sensing inputs to the control.

Field overload shutdown - Monitors field voltage to shutdown generator set when a field overload condition occurs.

Over load (kW) warning - Provides a warning indication when engine is operating at a load level over a set point.

Adjustment range: 80-140% of application rated kW, 0-120 second delay. Defaults: 105%, 60 seconds.

Reverse power shutdown (32) - Adjustment range: 5-20% of standby kW rating, delay 1-15 seconds. Default: 10%, 3 seconds.

Reverse Var shutdown - Shutdown level is adjustable: 15-50% of rated Var output, delay 10-60 seconds. Default: 20%, 10 seconds.

Short circuit protection - Output current on any phase is more than 175% of rating and approaching the thermal damage point of the alternator. Control includes algorithms to protect alternator from repeated over current conditions over a short period of time.

## Field Control Interface

### Input signals to the PowerCommand control include:

- Coolant level (where applicable)
- Fuel level (where applicable)
- Remote emergency stop
- Remote fault reset
- Remote start
- Battleshort
- Rupture basin
- Start type signal
- Configurable inputs - Control includes (4) input signals from customer discrete devices that are configurable for warning, shutdown or status indication, as well as message displayed

### Output signals from the PowerCommand control include:

- Load dump signal: Operates when the generator set is in an overload condition.
- Delayed off signal: Time delay based output which will continue to remain active after the control has removed the run command. Adjustment range: 0 – 120 seconds. Default: 0 seconds.
- Configurable relay outputs: Control includes (4) relay output contacts (3 A, 30 VDC). These outputs can be configured to activate on any control warning or shutdown fault as well as ready to load, not in auto, common alarm, common warning and common shutdown.
- Ready to load (generator set running) signal: Operates when the generator set has reached 90% of rated speed and voltage and latches until generator set is switched to off or idle mode.

### Communications Connections Include:

- PC tool interface: This RS-485 communication port allows the control to communicate with a personal computer running InPower software.
- Modbus RS-485 port: Allows the control to communicate with external devices such as PLCs using Modbus protocol.

  Note - An RS-232 or USB to RS-485 converter is required for communication between PC and control.
- Networking: This RS-485 communication port allows connection from the control to the other Cummins products.

## Mechanical Drawings

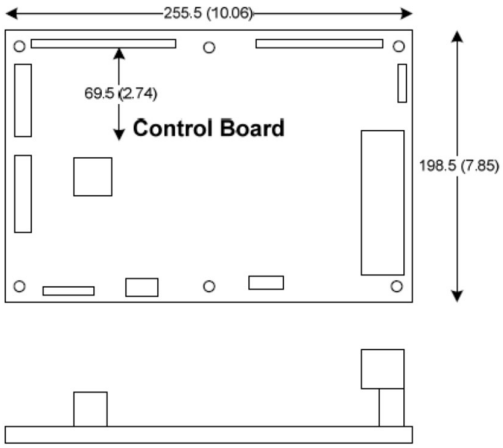


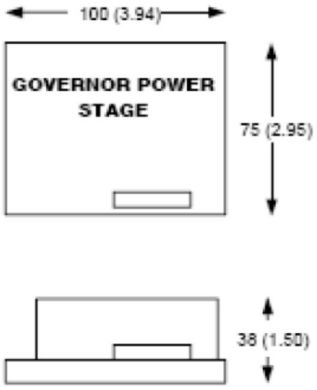



©2019 Cummins Inc. | PDS-1569 | PD00000157 | (01/26)

# PowerCommand Human Machine Interface HMI320

## Description

This control system includes an intuitive operator interface panel that allows for complete genset control as well as system metering, fault annunciation, configuration and diagnostics. The interface includes five genset status LED lamps with both internationally accepted symbols and English text to comply with customer's needs. The interface also includes an LED backlit LCD display with tactile feel soft-switches for easy operation and screen navigation. It is configurable for units of measurement and has adjustable screen contrast and brightness.

The *run/off/auto* switch function is integrated into the interface panel.

All data on the control can be viewed by scrolling through screens with the navigation keys. The control displays the current active fault and a time-ordered history of the five previous faults.

## Features

- LED indicating lamps:
  - Genset running
  - Remote start
  - Not in auto
  - Shutdown
  - Warning
  - Auto
  - Manual and stop
- 320 x 240 pixels graphic LED backlight LCD.
- Four tactile feel membrane switches for LCD defined operation. The functions of these switches are defined dynamically on the LCD.
- Seven tactile feel membrane switches dedicated screen navigation buttons for up, down, left, right, ok, home and cancel.
- Six tactile feel membrane switches dedicated to control for auto, stop, manual, manual start, fault reset and lamp test/panel lamps.
- Two tactile feel membrane switches dedicated to control of circuit breaker (where applicable).
- Allows for complete genset control setup.
- Certifications: Suitable for use on generator sets that are designed, manufactured, tested and certified to relevant UL, NFPA, ISO, IEC, Mil Std., CE and CSA standards.
- LCD languages supported: English, Spanish, French, German, Italian, Greek, Dutch, Portuguese, Finnish, Norwegian, Danish, Russian and Chinese Characters.

### Communications connections include:

- PC tool interface - This RS-485 communication port allows the HMI to communicate with a personal computer running InPower.
- This RS-485 communication port allows the HMI to communicate with the main control board.

## Mechanical Drawing

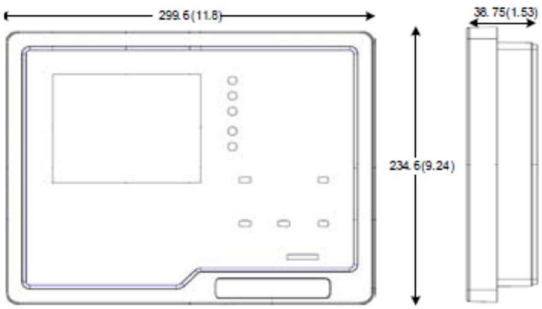


HMI

Dimensions mm(inches)

## Software

InPower (beyond 6.5 version) is a PC-based software service tool that is designed to directly communicate to PowerCommand generator sets and transfer switches, to facilitate service and monitoring of these products.

## Environment

The control is designed for proper operation without recalibration in ambient temperatures from -40 ºC to +70º C (-40 ºF to 158 ºF) and for storage from -55 ºC to +80 ºC (-67 ºF to 176 ºF). Control will operate with humidity up to 95%, non-condensing.

The HMI is designed for proper operation in ambient temperatures from -20 ºC to +70 ºC (-4 ºF to 158 ºF) and for storage from -30 ºC to +80 ºC (-22 ºF to 176 ºF).

The control board is fully encapsulated to provide superior resistance to dust and moisture. Display panel has a single membrane surface, which is impervious to effects of dust, moisture, oil and exhaust fumes. This panel uses a sealed membrane to provide long reliable service life in harsh environments.

The control system is specifically designed and tested for resistance to RFI/EMI and to resist effects of vibration to provide a long reliable life when mounted on a generator set. The control includes transient voltage surge suppression to provide compliance to referenced standards.


©2019 Cummins Inc. | PDS-1569 | PD00000157 | (01/26)

## Certifications

PowerCommand meets or exceeds the requirements of the following codes and standards:

- NFPA 110 for level 1 and 2 systems.
- ISO 8528-4: 1993 compliance, controls and switchgear.
- CE marking: The CE marking is only valid when equipment is used in a fixed installation application. Material compliance declaration is available upon request.
- UKCA marking: The UKCA marking is only valid when equipment is used in a fixed installation application. Material compliance declaration is available upon request.
- EN50081-1,2 residential/light industrial emissions or industrial emissions.
- EN50082-1,2 residential/light industrial or industrial susceptibility.
- ISO 7637-2, level 2; DC supply surge voltage test.
- Mil Std 202C, Method 101 and ASTM B117: Salt fog test.
- UL 6200 recognized and suitable for use on UL 2200 Listed generator sets.
- CSA C282-M1999 compliance
- CSA 22.2 No. 14 M91 industrial controls.
- PowerCommand control systems and generator sets are designed and manufactured in ISO 9001 certified facilities.

## Warranty

All components and subsystems are covered by an express limited one year warranty. Other optional and extended factory warranties and local distributor maintenance agreements are available.

PCCNet COMPATIBLE

**For more information contact your local Cummins distributor or visit power.cummins.com**

**Our energy working for you.™**

©2019 Cummins Inc. All rights reserved. Cummins is a registered trademark of Cummins Inc. PowerCommand, AmpSentry, InPower and “Our energy working for you.” are trademarks of Cummins Inc. Other company, product, or service names may be trademarks or service marks of others. Specifications are subject to change without notice.
PDS-1569 | | (01/26)

# Alternator Data Sheet
# Frame Size: S6L1D-C4

## Characteristics

| | No of Bearings: | 1-bearing | | 2-bearing | |
|---|---|---|---|---|---|
| **Weights:** | Stator assembly: | 1770 lb | 803 kg | 1770 lb | 803 kg |
| | Rotor assembly: | 1590 lb | 721 kg | 1497 lb | 679 kg |
| | Complete assembly: | 4182 lb | 1897 kg | 4343 lb | 1970 kg |
| **Maximum speed:** | | 2250 rpm | | | |
| **Excitation current:** | Full load: | 2.9 (Wdg 311/312), 2.6 (Wdg 07), 2.7 (Wdg 14) | | | |
| | No load: | 0.74 (Wdg 311/312), 0.92 (Wdg 07), 1.1 (Wdg 14) | | | |
| **Insulation system:** | Class H throughout | | | | |

## 3 Ø Ratings (0.8 power factor)

**60 Hz** (winding no)

| | | | 347/600 (07) | 208*/416 (311/312) | 220*/440 (311/312) | 230*/460 (311/312) | 240*/480 (311/312) | 240 Delta (311/312) |
|---|---|---|---|---|---|---|---|---|
| 163° C rise ratings | @ 20° C | kW | 870 | 760 | 730 | 700 | 652 | 760 |
| | | kVA | 1088 | 950 | 913 | 875 | 815 | 950 |
| 150° C rise ratings | @ 40° C | kW | 837 | 730 | 775 | 805 | 835 | 730 |
| | | kVA | 1046 | 913 | 969 | 1006 | 1044 | 913 |
| 125° C rise ratings | @ 40° C | kW | 800 | 700 | 740 | 770 | 800 | 700 |
| | | kVA | 1000 | 875 | 925 | 963 | 1000 | 875 |
| 105° C rise ratings | @ 40° C | kW | 730 | 652 | 676 | 712 | 732 | 652 |
| | | kVA | 913 | 815 | 845 | 890 | 915 | 815 |
| 80° C rise ratings | @ 40° C | kW | 632 | 568 | 588 | 612 | 632 | 568 |
| | | kVA | 790 | 710 | 735 | 765 | 790 | 710 |

## Reactances (per unit ± 10%)

(Based on full load at 125° C rise rating)

| | 347/600 (07) | 208*/416 (311/312) | 220*/440 (311/312) | 230*/460 (311/312) | 240*/480 (311/312) | 240 Delta (311/312) |
|---|---|---|---|---|---|---|
| Synchronous | 1.79 | 2.86 | 2.71 | 2.58 | 2.46 | 2.86 |
| Transient | 0.17 | 0.20 | 0.19 | 0.18 | 0.17 | 0.20 |
| Subtransient | 0.14 | 0.17 | 0.16 | 0.15 | 0.14 | 0.17 |
| Negative sequence | 0.06 | 0.08 | 0.08 | 0.07 | 0.07 | 0.08 |
| Zero sequence | 0.01 | 0.02 | 0.02 | 0.02 | 0.01 | 0.02 |

## Motor starting

| | 347/600 (07) | 208*/416 (311/312) | 220*/440 (311/312) | 230*/460 (311/312) | 240*/480 (311/312) | 240 Delta (311/312) |
|---|---|---|---|---|---|---|
| Maximum kVA (90% sustained voltage) | 3264 | 3264 | 3264 | 3264 | 3264 | 3264 |

## Time constants (sec)

| | 347/600 (07) | 208*/416 (311/312) | 220*/440 (311/312) | 230*/460 (311/312) | 240*/480 (311/312) | 240 Delta (311/312) |
|---|---|---|---|---|---|---|
| Transient | 0.089 | 0.092 | 0.092 | 0.092 | 0.092 | 0.092 |
| Subtransient | 0.022 | 0.016 | 0.016 | 0.016 | 0.016 | 0.016 |
| Open circuit | 3.321 | 3.34 | 3.34 | 3.34 | 3.34 | 3.34 |
| DC | 0.026 | 0.02 | 0.02 | 0.02 | 0.02 | 0.02 |

## Windings (@22° C)

| | | 347/600 (07) | 208*/416 (311/312) | 220*/440 (311/312) | 230*/460 (311/312) | 240*/480 (311/312) | 240 Delta (311/312) |
|---|---|---|---|---|---|---|---|
| Stator resistance | (L-L Ohms) | 0.0088 | 0.0066 | 0.0066 | 0.0066 | 0.0066 | 0.0066 |
| Rotor resistance | (Ohms) | 1.63 | 1.63 | 1.63 | 1.63 | 1.63 | 1.63 |
| Number of leads | | 6 | 12/6 | 12/6 | 12/6 | 12/6 | 12/6 |

*Parallel Star connection only available with 12 leads winding option

## S6L1D-C4 Wdg.311/312

## THREE PHASE EFFICIENCY CURVES

### 50Hz

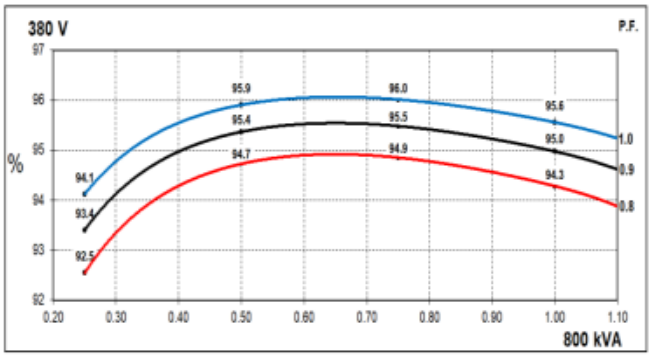


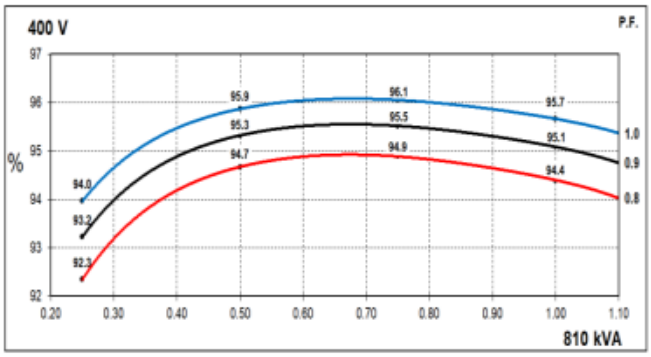


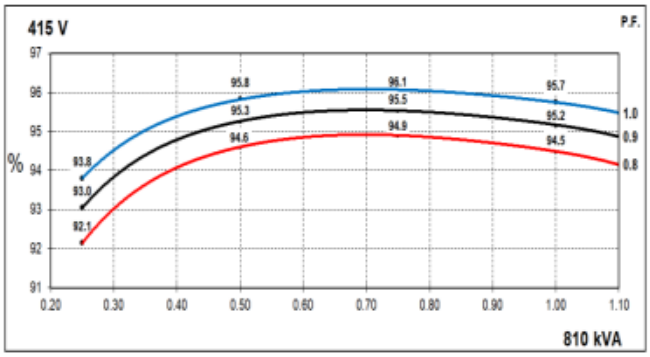


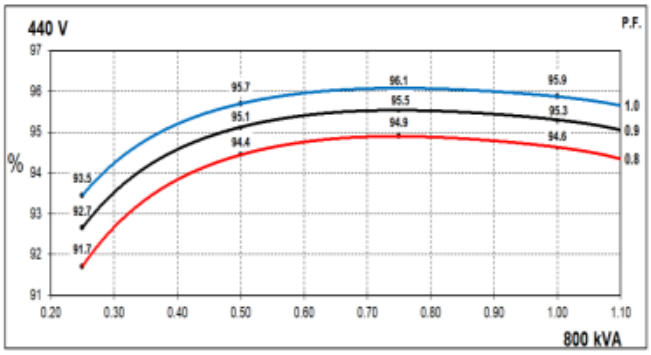


### 60Hz

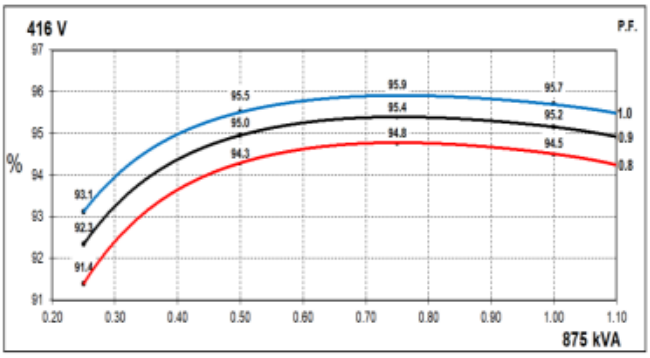


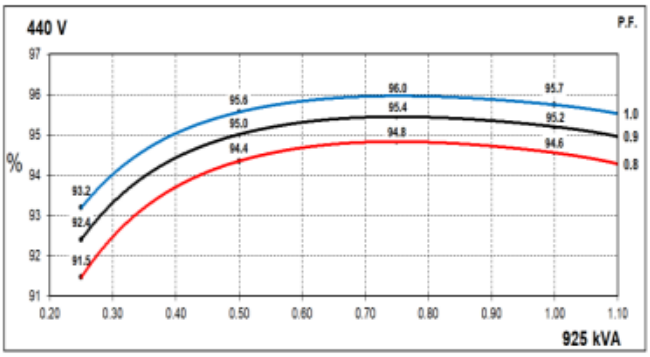


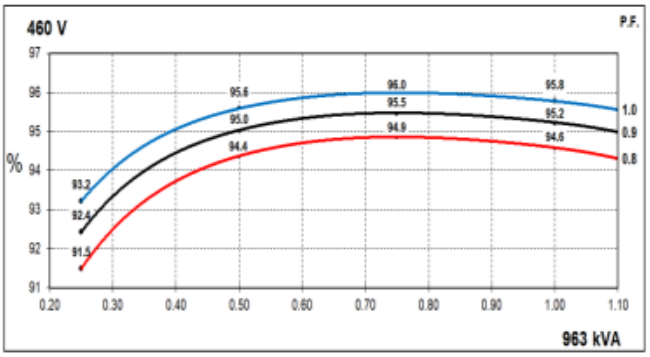


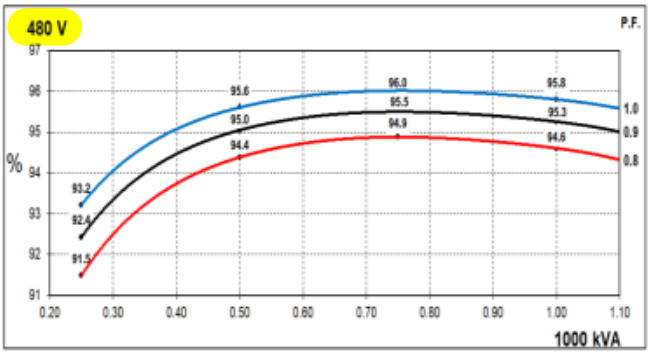

## S6L1D-C4 Wdg.311/312

### Locked Rotor Motor Starting Curves - Separately Excited

**50Hz**

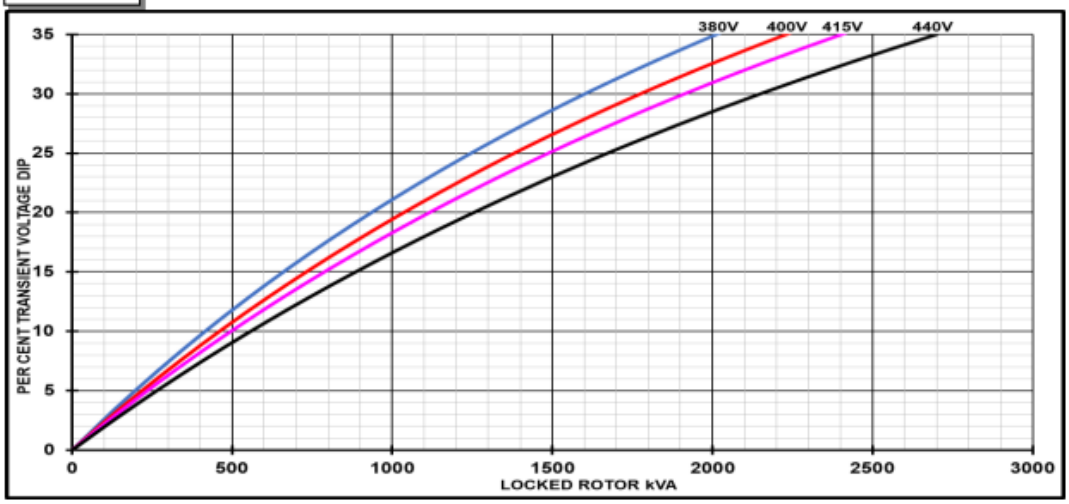


**60Hz**

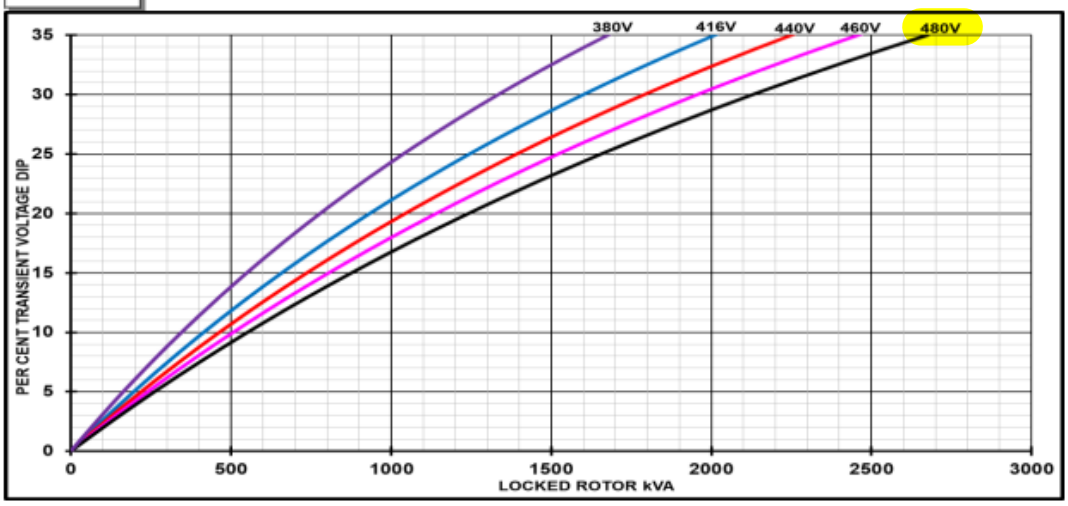


| Transient Voltage Dip Scaling Factor | | Transient Voltage Rise Scaling Factor | |
|---|---|---|---|
| Lagging PF | Scaling Factor | Lagging PF | Scaling Factor |
| <= 0.4 | 1.00 | <= 0.4 | 1.25 |
| 0.5 | 0.95 | 0.5 | 1.20 |
| 0.6 | 0.90 | 0.6 | 1.15 |
| 0.7 | 0.86 | 0.7 | 1.10 |
| 0.8 | 0.83 | > 0.7 | 1.00 |
| 0.9 | 0.75 | | |
| 0.95 | 0.70 | | |
| 1 | 0.65 | | |

**Note: To determine % Transient Voltage Dip or Voltage Rise at various PF, multiply the % Voltage Dip from the curve directly by the Scaling Factor.**

## S6L1D-C4 Wdg.311/312

### Three-phase Short Circuit Decrement Curve - Separately Excited

**50Hz**

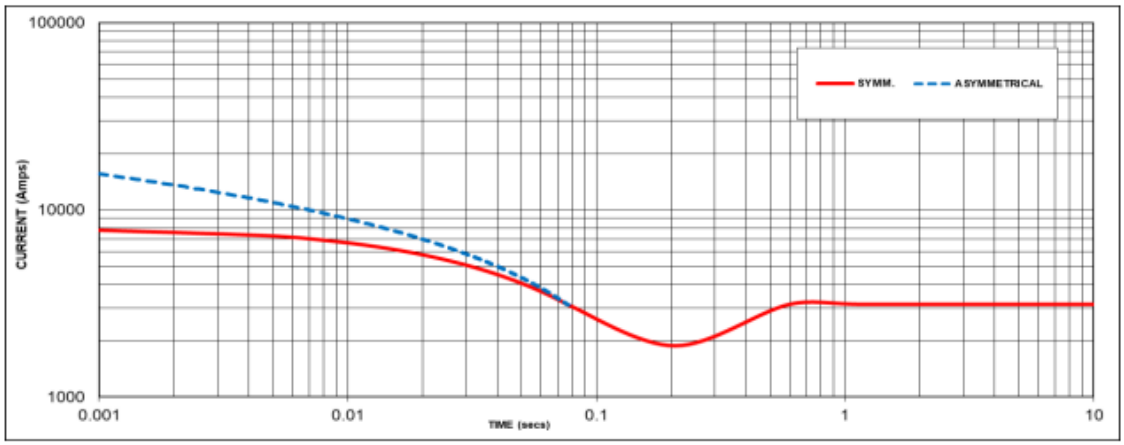


**60Hz**

Sustained Short Circuit = 3125 Amps

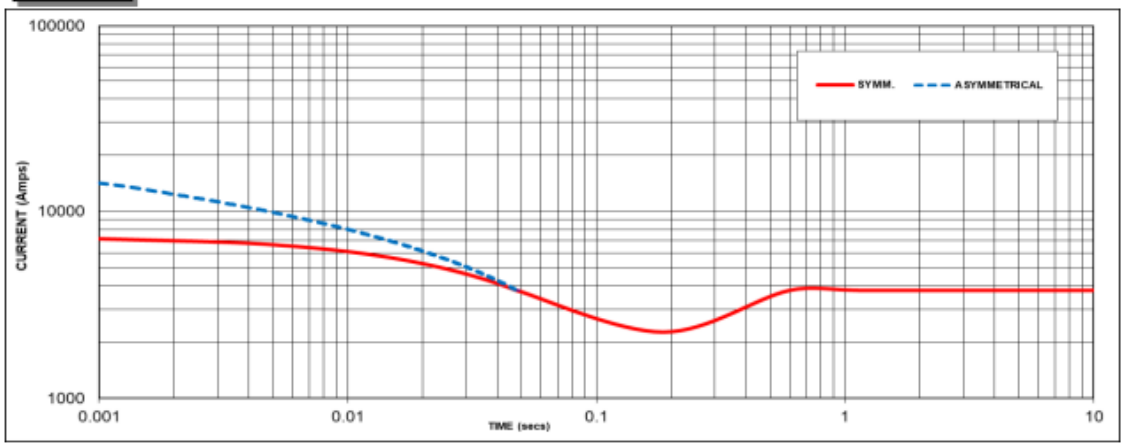


Sustained Short Circuit = 3781 Amps

**Note 1**
The following multiplication factors should be used to adjust the values from curve between time 0.001 seconds and the minimum current point in respect of nominal operating voltage :

| 50Hz | | 60Hz | |
|---|---|---|---|
| Voltage | Factor | Voltage | Factor |
| 380V | X 1.00 | 416V | X 1.00 |
| 400V | X 1.07 | 440V | X 1.06 |
| 415V | X 1.12 | 460V | X 1.12 |
| 440V | X 1.18 | 480V | X 1.17 |

The sustained current value is constant irrespective of voltage level

If MX322 or digital AVR is used, the sustained short-circuit current value is to be multiplied by a factor of 1.1.

**Note 2**
The following multiplication factor should be used to convert the values calculated in accordance with NOTE 1 to those applicable to the various types of short circuit :

| | 3-phase | 2-phase L-L | 1-phase L-N |
|---|---|---|---|
| Instantaneous | x 1.00 | x 0.87 | x 1.30 |
| Minimum | x 1.00 | x 1.80 | x 3.20 |
| Sustained | x 1.00 | x 1.50 | x 2.50 |
| Max. sustained duration | 10 sec. | 5 sec. | 2 sec. |

All other times are unchanged

**Note 3**
Curves are drawn for Star connections under no-load excitation at rated speeds. For other connection (where applicable) the following multipliers should be applied to current values as shown :
Parallel Star = Curve current value X 2
Series Delta = Curve current value X 1.732

# Sound Data
## C800D6E
## S17-G1 60Hz Diesel

## A-weighted Sound Pressure Level @ 7 meters, dB(A)

See notes 2, 5 and 7-11 listed below

| Configuration | Exhaust | Applied Load | Position (Note 2) | | | | | | | | 8 Position Average |
|---|---|---|---|---|---|---|---|---|---|---|---|
| | | | 1 | 2 | 3 | 4 | 5 | 6 | 7 | 8 | |
| Standard - Unhoused | Infinite Exhaust | 0% Standby | 89.5 | 96.7 | 96.5 | 96.8 | 95.6 | 97.4 | 93.6 | 94.3 | 95.6 |
| | | 75% Standby | 91.6 | 98.3 | 98.1 | 98.2 | 95.0 | 98.2 | 94.8 | 96.6 | 96.8 |
| | | 100% Standby | 92.4 | 98.7 | 98.9 | 98.8 | 95.1 | 98.4 | 95.6 | 96.4 | 97.3 |
| Housed (F200) | Mounted Muffler | 0% Standby | 88.9 | 86.3 | 82.3 | 85.1 | 85.2 | 86.1 | 82.4 | 84.5 | 85.6 |
| | | 75% Standby | 89.6 | 86.8 | 83.1 | 85.8 | 85.7 | 87.0 | 83.4 | 86.1 | 86.4 |
| | | 100% Standby | 90.3 | 87.3 | 83.6 | 86.3 | 86.3 | 87.3 | 83.4 | 86.7 | 86.9 |
| Housed (F201) | Mounted Muffler | 0% Standby | 79.1 | 73.6 | 71.7 | 74.7 | 77.4 | 75.4 | 72.4 | 72.7 | 75.3 |
| | | 75% Standby | 79.7 | 74.3 | 72.7 | 75.3 | 77.5 | 75.7 | 73.2 | 73.6 | 75.9 |
| | | 100% Standby | 80.1 | 74.8 | 73.6 | 75.7 | 77.7 | 76.4 | 74.2 | 74.7 | 76.4 |
| Housed (F202) | Mounted Muffler | 0% Standby | 76.5 | 71.5 | 70.6 | 73.4 | 74.9 | 73.7 | 71.0 | 72.0 | 73.4 |
| | | 75% Standby | 78.0 | 72.4 | 71.5 | 73.9 | 75.1 | 74.1 | 72.6 | 73.8 | 74.4 |
| | | 100% Standby | 79.0 | 73.9 | 72.2 | 73.9 | 74.7 | 75.1 | 74.1 | 75.5 | 75.2 |

# Sound Data
## C800D6E
## S17-G1 60Hz Diesel

## Average A-weighted Sound Pressure Level @ 1 meter, dB(A)

See notes 1, 5 and 7-14 listed below

| Configuration | Exhaust | Applied Load | Octave Band Center Frequency (Hz) | | | | | | | | | | | Overall Sound Pressure Level |
|---|---|---|---|---|---|---|---|---|---|---|---|---|---|---|
| | | | 16 | 31.5 | 63 | 125 | 250 | 500 | 1000 | 2000 | 4000 | 8000 | 16000 | |
| Standard - Unhoused | Infinite Exhaust | 0% Standby | N/A | 51.1 | 64.0 | 76.3 | 97.2 | 98.2 | 99.9 | 98.1 | 92.3 | 85.6 | 72.7 | 104.8 |
| | | 75% Standby | N/A | 51.6 | 68.1 | 78.3 | 97.2 | 98.5 | 100.5 | 98.6 | 97.5 | 96.3 | 77.2 | 106.2 |
| | | 100% Standby | N/A | 51.2 | 68.8 | 79.3 | 97.2 | 98.5 | 100.7 | 99.2 | 98.6 | 97.0 | 78.1 | 106.5 |
| Housed (F200) | Mounted Muffler | 0% Standby | N/A | 50.9 | 73.7 | 78.0 | 85.0 | 88.4 | 93.0 | 91.2 | 84.4 | 75.4 | 59.3 | 96.7 |
| | | 75% Standby | N/A | 50.8 | 78.7 | 82.5 | 85.2 | 89.3 | 93.1 | 90.8 | 84.7 | 77.9 | 62.6 | 97.0 |
| | | 100% Standby | N/A | 51.1 | 78.4 | 82.7 | 86.0 | 89.7 | 93.2 | 91.0 | 85.4 | 83.6 | 62.9 | 97.4 |
| Housed (F201) | Mounted Muffler | 0% Standby | N/A | 52.0 | 62.8 | 68.7 | 76.9 | 78.9 | 81.4 | 79.7 | 72.9 | 64.5 | 51.3 | 85.9 |
| | | 75% Standby | N/A | 54.2 | 66.0 | 71.8 | 77.1 | 79.1 | 81.5 | 80.0 | 75.3 | 68.9 | 52.7 | 86.4 |
| | | 100% Standby | N/A | 54.5 | 66.7 | 72.8 | 77.6 | 79.6 | 81.9 | 80.5 | 77.0 | 72.3 | 54.8 | 87.0 |
| Housed (F202) | Mounted Muffler | 0% Standby | N/A | 56.3 | 64.6 | 69.8 | 76.2 | 78.1 | 79.0 | 76.9 | 70.6 | 62.8 | 50.6 | 84.2 |
| | | 75% Standby | N/A | 56.9 | 66.4 | 71.9 | 76.5 | 78.2 | 79.2 | 77.7 | 74.2 | 68.2 | 51.9 | 84.9 |
| | | 100% Standby | N/A | 56.9 | 67.7 | 73.8 | 76.8 | 78.7 | 78.6 | 77.2 | 75.5 | 71.6 | 53.9 | 85.1 |

# Sound Data
## C800D6E
## S17-G1 60Hz Diesel

## A-weighted Sound Pressure Level @ Operator Location, dB(A)

See notes 5 and 7-15 listed below

| Configuration | Exhaust | Applied Load | Octave Band Center Frequency (Hz) | | | | | | | | | | | Overall Sound Pressure Level |
|---|---|---|---|---|---|---|---|---|---|---|---|---|---|---|
| | | | 16 | 31.5 | 63 | 125 | 250 | 500 | 1000 | 2000 | 4000 | 8000 | 16000 | |
| Standard - Unhoused | Infinite Exhaust | 0% Standby | N/A | 47.0 | 65.3 | 76.4 | 96.3 | 101.6 | 99.3 | 98.4 | 92.7 | 85.1 | 70.1 | 105.6 |
| | | 75% Standby | N/A | 46.3 | 69.6 | 77.8 | 95.8 | 102.3 | 100.1 | 98.8 | 95.9 | 96.0 | 81.4 | 106.7 |
| | | 100% Standby | N/A | 45.9 | 70.8 | 78.4 | 95.7 | 102.2 | 100.3 | 99.5 | 97.1 | 102.3 | 84.9 | 108.0 |
| Housed (F200) | Mounted Muffler | 0% Standby | N/A | 47.8 | 69.2 | 71.9 | 80.9 | 81.3 | 85.3 | 81.5 | 75.2 | 67.8 | 49.5 | 89.0 |
| | | 75% Standby | N/A | 47.3 | 74.4 | 77.2 | 81.3 | 81.3 | 86.2 | 81.6 | 76.2 | 75.9 | 56.5 | 90.0 |
| | | 100% Standby | N/A | 46.2 | 76.7 | 79.8 | 82.0 | 81.9 | 86.5 | 81.8 | 77.3 | 78.2 | 57.8 | 90.7 |
| Housed (F201) | Mounted Muffler | 0% Standby | N/A | 47.6 | 55.9 | 63.2 | 72.9 | 71.2 | 72.4 | 68.8 | 65.2 | 57.7 | 43.8 | 78.1 |
| | | 75% Standby | N/A | 45.8 | 59.5 | 67.6 | 73.4 | 72.1 | 72.3 | 70.0 | 66.6 | 64.3 | 47.7 | 79.0 |
| | | 100% Standby | N/A | 46.3 | 59.5 | 68.8 | 75.1 | 73.5 | 73.5 | 70.7 | 67.9 | 64.1 | 48.3 | 80.3 |
| Housed (F202) | Mounted Muffler | 0% Standby | N/A | 45.2 | 57.4 | 66.1 | 73.9 | 72.5 | 71.4 | 68.4 | 63.5 | 56.9 | 42.8 | 78.4 |
| | | 75% Standby | N/A | 45.1 | 65.1 | 74.2 | 76.3 | 74.3 | 72.5 | 69.6 | 66.4 | 72.3 | 48.4 | 80.6 |
| | | 100% Standby | N/A | 44.7 | 66.3 | 74.8 | 77.3 | 74.3 | 72.5 | 69.4 | 66.4 | 67.1 | 48.0 | 81.8 |

## A-weighted Sound Power Level, dB(A)

See notes 3 and 6-14 listed below

| Configuration | Exhaust | Applied Load | Octave Band Center Frequency (Hz) | | | | | | | | | | | Overall Sound Power Level |
|---|---|---|---|---|---|---|---|---|---|---|---|---|---|---|
| | | | 16 | 31.5 | 63 | 125 | 250 | 500 | 1000 | 2000 | 4000 | 8000 | 16000 | |
| Standard - Unhoused | Infinite Exhaust | 0% Standby | N/A | 70.6 | 83.5 | 95.7 | 116.7 | 117.7 | 119.4 | 117.6 | 111.7 | 105.1 | 92.2 | 124.3 |
| | | 75% Standby | N/A | 71.0 | 87.6 | 97.8 | 116.7 | 117.9 | 119.9 | 118.1 | 117.0 | 115.8 | 96.6 | 125.6 |
| | | 100% Standby | N/A | 70.7 | 88.3 | 98.7 | 116.6 | 118.0 | 120.2 | 118.7 | 118.1 | 116.5 | 97.6 | 126.0 |
| Housed (F200) | Mounted Muffler | 0% Standby | N/A | 71.8 | 94.6 | 98.9 | 105.9 | 109.2 | 113.8 | 112.0 | 105.2 | 96.2 | 80.1 | 117.5 |
| | | 75% Standby | N/A | 71.7 | 99.6 | 103.4 | 106.1 | 110.1 | 114.0 | 111.7 | 105.5 | 98.8 | 83.5 | 117.9 |
| | | 100% Standby | N/A | 71.9 | 99.2 | 103.6 | 106.8 | 110.6 | 114.1 | 111.8 | 106.2 | 104.4 | 83.7 | 118.3 |
| Housed (F201) | Mounted Muffler | 0% Standby | N/A | 72.9 | 83.7 | 89.6 | 97.8 | 99.7 | 102.2 | 100.6 | 93.7 | 85.4 | 72.2 | 106.8 |
| | | 75% Standby | N/A | 75.1 | 86.9 | 92.7 | 97.9 | 100.0 | 102.4 | 100.9 | 96.2 | 89.8 | 73.5 | 107.3 |
| | | 100% Standby | N/A | 75.3 | 87.5 | 93.6 | 98.4 | 100.5 | 102.7 | 101.3 | 97.9 | 93.2 | 75.7 | 107.9 |
| Housed (F202) | Mounted Muffler | 0% Standby | N/A | 77.3 | 85.6 | 90.8 | 97.2 | 99.1 | 100.0 | 97.9 | 91.6 | 83.8 | 71.6 | 105.2 |
| | | 75% Standby | N/A | 78.2 | 88.3 | 93.9 | 97.9 | 99.5 | 100.4 | 99.0 | 96.1 | 91.0 | 74.1 | 105.9 |
| | | 100% Standby | N/A | 78.1 | 88.9 | 94.9 | 97.9 | 99.7 | 99.6 | 98.3 | 96.6 | 92.6 | 75.1 | 106.2 |

## Exhaust Sound Power Level, dB(A)

See notes 4 and 6-14 listed below

| Configuration | Exhaust | Applied Load | Octave Band Center Frequency (Hz) | | | | | | | | | | | Overall Sound Power Level |
|---|---|---|---|---|---|---|---|---|---|---|---|---|---|---|
| | | | 16 | 31.5 | 63 | 125 | 250 | 500 | 1000 | 2000 | 4000 | 8000 | 16000 | |
| Standard - Unhoused | No Muffler | 0% Standby | N/A | 61.7 | 96.9 | 103.9 | 108.2 | 106.9 | 103.3 | 101.8 | 97.8 | 88.0 | 74.5 | 112.7 |
| | | 75% Standby | N/A | 65.6 | 103.1 | 109.9 | 114.1 | 117.7 | 117.7 | 118.9 | 116.6 | 117.7 | 107.3 | 125.4 |
| | | 100% Standby | N/A | 68.2 | 105.6 | 111.8 | 115.4 | 122.1 | 121.9 | 123.5 | 121.0 | 120.6 | 111.3 | 129.3 |

Global Notes:

1. Sound pressure levels at 1 meter are measured per the requirements of ISO 3744, ISO 8528-10, and European Communities Directive 2000/14/EC as applicable. The microphone measurement locations are 1 meter from a reference parallelepiped just enclosing the generator set (enclosed or unenclosed).
2. Seven-meter measurement location 1 is 7 meters (23 feet) from the generator (alternator) end of the generator set, and the locations proceed counter-clockwise around the generator set at 45° angles at a height of 1.2 meters (48 inches) above the ground surface.
3. Sound Power Levels are calculated according to ISO 3744, ISO 8528-10, and or CE (European Union) requirements..
4. Exhaust Sound Levels are measured and calculated per ISO 6798, Annex A.
5. Reference Sound Pressure Level is 20 µPa.
6. Reference Sound Power Level is 1 pW ($10^{-12}$ Watt).
7. Sound data for remote-cooled generator sets are based on rated loads without cooling fan noise.
8. Sound data for the generator set with infinite exhaust do not include the exhaust noise contribution.
9. Published sound levels are measured at CE certified test site and are subject to instrumentation, measurement, installation and manufacturing variability.
10. Unhoused/Open configuration generator sets refers to generator sets with no sound enclosures of any kind.
11. Housed/Enclosed/Closed/Canopy configuration generator sets refer to generator sets that have noise reduction sound enclosures installed over the generator set and usually integrally attached to the skid base/base frame/fuel container base of the generator set.
12. Published sound levels meet the requirements India's Central Pollution Control Board (Ministry of Environment & Forests),vide GSR 371 (E), which states the A-weighted sound level at1meter from any diesel generator set up to a power output rating of 1000kVA shall not exceed 75dB(A)
13. For updated noise pollution information for India see website: http://www.envfor.nic.in/legis/legis.html
14. Sound levels must meet India's Ambient Air Noise Quality Standards detailed for Daytime/Night-time operation in Noise Pollution (Regulation and Control) Rules, 2000
15. Operator Location is near genset control panel and is at 1 meter distance from genset control panel and at 1.6 meter height.

# Cooling System Data

## C800D6E
## S17-G1

| High Ambient Air Temperature Radiator Cooling System | | | | | | | | | | | |
|---|---|---|---|---|---|---|---|---|---|---|---|
| | | | | Max cooling @ air flow static restriction, unhoused (inches water/mm water) | | | | | Housed in free air, no air discharge restriction | | |
| | | | | 0.0/ 0.0 | 0.25/ 6.4 | 0.5/ 12.7 | 0.75/ 19.1 | 1.0/ 25.4 | Weather (F200) | Sound Level 1 (F201) | Sound Level 2 (F202) |
| | Fuel Type | Duty | Rating (kW) | Maximum allowable ambient temperature, degree C | | | | | | | |
| 60 Hz | Diesel | Standby | 800 | 63.5 | 62.6 | 61.8 | 60.9 | 60.0 | 57.5 | 52.2 | 47.5 |
| | | | | Airflow ($m^3/s$) – Actual @ Fan | | | | | | | |
| | | | | 27.5 | 27.1 | 26.7 | 25.9 | 25.2 | 22.9 | 21.2 | 16.9 |

| Enhanced High Ambient Air Temperature Radiator Cooling System | | | | | | | | | | | |
|---|---|---|---|---|---|---|---|---|---|---|---|
| | | | | Max cooling @ air flow static restriction, unhoused (inches water/mm water) | | | | | Housed in free air, no air discharge restriction | | |
| | | | | 0.0/ 0.0 | 0.25/ 6.4 | 0.5/ 12.7 | 0.75/ 19.1 | 1.0/ 25.4 | Weather (F200) | Sound Level 1 (F201) | Sound Level 2 (F202) |
| | Fuel Type | Duty | Rating (kW) | Maximum allowable ambient temperature, degree C | | | | | | | |
| 60 Hz | Diesel | Standby | 800 | 65.0 | 64.2 | 63.5 | 62.7 | 61.8 | 59.4 | 54.4 | 47.5 |
| | | | | Airflow ($m^3/s$) – Actual @ Fan | | | | | | | |
| | | | | 27.5 | 27.1 | 26.7 | 25.9 | 25.2 | 22.9 | 21.2 | 16.9 |

Notes:

1. Data shown are anticipated cooling performance for typical generator set.
2. Cooling data is based on 1000 ft (305 m) site test location.
3. Generator set power output may need to be reduced at high ambient conditions. Consult generator set data sheet for derate schedules.
4. Cooling performance may be reduced due to several factors including but not limited to: Incorrect installation, improper operation, fouling of the cooling system, and other site installation variables.

# 2026 EPA Tier 2 Exhaust Emission Compliance Statement C800D6E Stationary Emergency

## 60 Hz Diesel Generator Set

**Compliance Information:**

**The engine used in this generator set complies with Tier 2 emissions limit of U.S. EPA New Source Performance Standards for stationary emergency engines under the provisions of 40 CFR 60 Subpart IIII when tested per ISO8178 D2.**

| | |
|---|---|
| Engine Manufacturer: | Cummins, Inc. |
| EPA Certificate Number: | TCEXL17.0AAA-001 |
| Effective Date: | 04/30/2025 |
| Date Issued: | 04/30/2025 |
| EPA Engine Family (Cummins Emissions Family): | TCEXL17.0AAA |

**Engine Information:**

| | | | |
|---|---|---|---|
| Model: | S17-G1 | Bore: | 5.83 in. (148 mm) |
| Engine Nameplate HP: | 1474 | Stroke: | 6.42 in. (163mm) |
| Type: | 4 Cycle, In-line, 6 Cylinder Diesel | Displacement: | 1025 cu. in. (17 liters) |
| Aspiration: | Turbocharged and Charge Air Cooled | Compression ratio: | 14.5:1 |
| Emission Control Device: | Turbocharged and Charge Air Cooled | Exhaust stack diameter: | 8 in. (203 mm) |

**Diesel Fuel Emission Limits**

**D2 Cycle Exhaust Emissions**

| | Grams per BHP-hr | | | Grams per kWm-hr | | |
|---|---|---|---|---|---|---|
| | $NO_X$ + NMHC | CO | PM | $NO_X$ + NMHC | CO | PM |
| EPA Emissions Limit | 4.8 | 2.6 | 0.15 | 6.4 | 3.5 | 0.20 |

**Test methods:** EPA emissions recorded per 40CFR89 (ref ISO8178-1) and weighted at load points prescribed in the Subpart E, Appendix A for constant speed engines.

**Diesel fuel specifications:** 40-48 Cetane number, Reference: ASTM D975 No. 2-D, 300-500 ppm Sulfur

**Reference conditions:** Air Inlet Temperature: 25 °C (77 °F), Fuel Inlet Temperature: 40 °C (104 °F). Barometric Pressure: 100 kPa (29.53 in Hg), Humidity: 10.7 g/kg (75 grains H2O/lb) of dry air; required for NOx correction, Restrictions: Intake Restriction set to a maximum allowable limit for clean filter; Exhaust Back Pressure set to a maximum allowable limit.

Tests conducted using alternate test methods, instrumentation, fuel or reference conditions can yield different results. Engine operation with excessive air intake or exhaust restriction beyond published maximum limits, or with improper maintenance, may result in elevated emission levels.

# Exhaust Emission Data Sheet
# C800D6E
## 60 Hz Diesel Generator Set

**Engine Information:**

| | | | |
|---|---|---|---|
| Model: | Cummins Inc. S17-G1 | Bore: | 5.83 in. (148 mm) |
| Type: | Four Cycle, Inline, 6 Cylinder Diesel | Stroke: | 6.42 in. (163 mm) |
| Aspiration: | Turbocharged and Charge Air Cooled | Displacement: | 1025 cu. In. (16.8 liters) |
| Compression Ratio: | 14.5:1 | | |

| **Performance Data** | **1/4 Standby** | **1/2 Standby** | **3/4 Standby** | **Full Standby** |
|---|---|---|---|---|
| Engine BHP @ 1800 RPM (60 Hz) | 296 | 593 | 889 | 1185 |
| Fuel Consumption (US Gal/Hr) | 17.5 | 30.9 | 43.6 | 57.2 |
| Exhaust Gas Flow (CFM) | 2222 | 3632 | 4829 | 5896 |
| Exhaust Gas Temperature (°F) | 684 | 725 | 750 | 734 |
| Air to Fuel Ratio | 37.3:1 | 32.7:1 | 29.7:1 | 26.2:1 |
| **Exhaust Emission Data** | | | | |
| HC (Total Unburned Hydrocarbons) | 0.25 | 0.08 | 0.05 | 0.05 |
| NOx (Oxides of Nitrogen) | 3.29 | 3.32 | 3.84 | 5.09 |
| CO (Carbon Monoxide) | 1.60 | 0.47 | 0.36 | 0.38 |
| PM (Particulate Matter) | 0.14 | 0.10 | 0.06 | 0.04 |
| $SO_2$ (Sulfur Dioxide) | 0.004 | 0.004 | 0.003 | 0.003 |
| Smoke (FSN) | 0.98 | 0.87 | 0.69 | 0.54 |

(All values, except Smoke, are cited: g/BHP-hr)

**Test Conditions**

Tests to demonstrate compliance with the regulated levels were conducted per 97/68/EC (Ref. ISO8178-1) and weighted at load points prescribed in 97/68/EC Annex 3, “test procedures”. (ref ISO8178-4, D2)

| | |
|---|---|
| Fuel Specification: | 52-54 Cetane Number, 0.03 Max Wt.% Sulfur; as referenced by directive 97/68/EC. |
| Air Inlet Temperature | 25 °C (77 °F) |
| Fuel Inlet Temperature: | 40 °C (104 °F) |
| Barometric Pressure: | 100 kPa (29.53 in Hg) |
| Humidity: | NOx measurement corrected to 10.7 g/kg (75 grains $H_2O$/lb) of dry air. |
| Intake Restriction: | Set to maximum allowable limit for clean filter. |
| Exhaust Back Pressure: | Set to maximum allowable limit. |

# Prototype Test Support (PTS)
# 60 Hz test summary

| Generator set models | Representative prototype | |
|---|---|---|
| C800D6E | Model: | C800D6E |
| | Engine: | S17-G1 |
| | Alternator: | S6L1D-D4 |

The following summarizes prototype testing conducted on the designated representative prototype of the specified models. This testing is conducted to verify the complete generator set electrical and mechanical design integrity.

Prototype testing is conducted only on generator sets not sold as new equipment.

**Maximum surge power: 966.64 kW**

The generator set was evaluated to determine the stated maximum surge power.

**Maximum motor starting: 2750 kVA**

The generator set was tested to simulate motor starting by applying the specified kVA load at low lagging power factor (0.4 or lower). With this load applied, the generator set recovered to a minimum of 90% rated voltage

**Alternator temperature rise:**

The highest rated temperature rise (150°C) test result are reported as follows to verify that worst case temperature rises do not exceed allowable NEMA MG1 limits for class H insulation. Tests were conducted per IEEE 115, rise by resistance and embedded detector, with rated voltages. Only the highest temperatures are reported.

| Location | Maximum Rise (°C) |
|---|---|
| Alternator Stator: | 150 |
| Alternator Rotor: | 150 |
| Exciter Stator: | 150 |
| Exciter Rotor: | 150 |

**Torsional analysis and testing:**

The generator set on S6L1D-D4 was tested to verify that the design is not subjected to harmful torsional stresses in excess of 8565 psi. A spectrum analysis of the transducer output was conducted over the speed range of 1650 to 1950 RPM.

**Cooling system:** 50°C ambient
1.0 in H2O restriction

The cooling system was tested to determine ambient temperature and static restriction capabilities. The test was performed at full rated load elevated ambient temperature under static restriction conditions.

**Electrical and mechanical strength:**

The generator set was tested to several single phase and three phase faults to verify that the generator can safely withstand the forces associated with short circuit conditions. The generator set was capable of producing full rated output at the conclusion of the testing.

**Steady state performance:**

The generator set was tested to verify steady state operating performance. It was within the specified maximum limits.

| | |
|---|---|
| Voltage regulation: | ± 1% |
| Random voltage variation: | ± 1% |
| Frequency regulation: | Isochronous |
| Random frequency variation: | ± 0.5% |

**Transient performance:**

Transient behavior of the generator set with the listed alternator was evaluated to confirm single step loading capability in accordance with NFPA 110 requirements. Voltage and frequency responses for load application and removal at 0.8 power factor are summarized below:

Full load acceptance:

| | |
|---|---|
| Voltage dip: | 42.50% |
| Recovery time: | 5.41 seconds |
| Frequency dip: | 12.45% |
| Recovery time: | 6.00 seconds |

Full load rejection:

| | |
|---|---|
| Voltage rise: | 20.22% |
| Recovery time: | 1.19 seconds |
| Frequency rise: | 6.52% |
| Recovery time: | 0.52 seconds |

All data based on 0.8 power factor:

**Harmonic analysis:**

(per MIL-STD-705B, Method 601.4)

| | Line to Line | | Line to Neutral | |
|---|---|---|---|---|
| Harmonic | No load | Full load | No load | Full load |
| 3 | 0.18 | 0.18 | 0.18 | 0.18 |
| 5 | 0.30 | 0.30 | 0.30 | 0.30 |
| 7 | 0.42 | 0.42 | 0.42 | 0.42 |
| 9 | 0.54 | 0.54 | 0.54 | 0.54 |
| 11 | 0.66 | 0.66 | 0.66 | 0.66 |
| 13 | 0.78 | 0.78 | 0.78 | 0.78 |
| 15 | 0.90 | 0.90 | 0.90 | 0.90 |

# SECTION 3

## Generator Accessories

# Product data sheet

Specifications

## Circuit breaker, PowerPacT P, 1200A, 3 pole, 600VAC, 25kA, lugs, Micrologic 5.0

PJP36120U33E

## Main

| | |
|---|---|
| **Range** | PowerPact |
| **Product Name** | PowerPact P |
| **Product Or Component Type** | Circuit breaker |
| **Device Application** | Distribution |

## Complementary

| | |
|---|---|
| **Line Rated Current** | 1200 A |
| **Number Of Poles** | 3P |
| **Control Type** | Toggle |
| **Breaking Capacity Code** | J |
| **Breaking Capacity** | AIR 100 kA 240 V AC 50/60 Hz UL 489<br>AIR 65 kA 480 V AC 50/60 Hz UL 489<br>AIR 25 kA 600 V AC 50/60 Hz UL 489<br>Icu 65 kA 240 V AC 50/60 Hz IEC 60947-2<br>Icu 50 kA 380/415 V AC 50/60 Hz IEC 60947-2 |
| **[Ue] Rated Operational Voltage** | 600 V AC 50/60 Hz UL 489 |
| **Network Frequency** | 50/60 Hz |
| **[Ics] Rated Service Breaking Capacity** | 35 kA 240 V AC 50/60 Hz IEC 60947-2<br>25 kA 380/415 V AC 50/60 Hz IEC 60947-2 |
| **[Uimp] Rated Impulse Withstand Voltage** | 8 kV IEC 60947-2 |
| **Trip Unit Technology** | Electronic, standard, MicroLogic 5.0, LSI |
| | |
| **[Ui] Rated Insulation Voltage** | 750 V IEC 60947-2 |
| **Trip Unit Name** | MicroLogic 5.0 |
| **Awg Gauge** | 4 x AWG 3/0...500 kcmil aluminium/copper |
| **Local Signalling** | Overload 1 1 LED amber)<br>1 trip indicator green) |
| **Mounting Mode** | Unit mount lug) |
| **Mounting Support** | Lug |
| **Electrical Connection** | Terminal nut, line<br>Lugs, load |
| **Terminal Identifier** | AL1200P25K |
| **Long Time Pick-Up Adjustment Range** | 0.6...1 x Ir |

Price is “List Price” and may be subject to a trade discount – check with your local distributor or retailer for actual price.

Disclaimer: This documentation is not intended as a substitute for and is not to be used for determining suitability or reliability of these products for specific user applications

| | |
|---|---|
| **Tightening Torque** | 442.54 lbf.in (50 N.m) 0.15…0.37 in² (95…240 mm²) (4 x AWG 3/0...500 kcmil)<br>8.85…11.51 lbf.in (1.0…1.3 N.m) |
| **Number Of Slots** | 2 auxiliary switch OF plug-in)<br>1 alarm switch SD plug-in)<br>1 overcurrent trip switch SDE plug-in)<br>1 voltage release MN or MX plug-in) |
| **Power Wire Stripping Length** | 1.18 in (30 mm) |
| **Height** | 16.16 in (410.46 mm) |
| **Width** | 8.27 in (210.06 mm) |
| **Depth** | 8.05 in (204.47 mm) |
| **Net Weight** | 32 lb(US) (14.51 kg) |
| **Quantity Per Set** | 1 |
| **Circuit Breaker Application** | HACR rated |

## Environment

| | |
|---|---|
| **Quality Labels** | CE |
| **Standards** | UL<br>CSA<br>NEMA<br>NOM-003-SCFI-2000<br>IEC 60947-2 |
| **Product Certifications** | UL<br>CSA<br>NOM |
| **Ip Degree Of Protection** | Front cover IP40 |
| **Pollution Degree** | 3 IEC 60947-1 |
| **Ambient Air Temperature For Operation** | 28…158 °F (-2…70 °C) |
| **Ambient Air Temperature For Storage** | -58…185 °F (-50…85 °C) |
| **Operating Altitude** | < 6561.68 ft (2000 m) without derating<br>13123.36 ft (4000 m) with derating |

## Ordering and shipping details

| | |
|---|---|
| **Category** | US10DE201215 |
| **Discount Schedule** | 0DE2 |
| **Returnability** | Yes |
| **Country Of Origin** | US |

## Packing Units

| | |
|---|---|
| **Unit Type Of Package 1** | PCE |
| **Number Of Units In Package 1** | 1 |
| **Package 1 Height** | 11.75 in (29.845 cm) |
| **Package 1 Width** | 11.63 in (29.528 cm) |
| **Package 1 Length** | 20.25 in (51.435 cm) |
| **Package 1 Weight** | 32.00 lb(US) (14.515 kg) |

## Sustainability

**Green Premium™ label** is Schneider Electric's commitment to delivering products with best-in-class environmental performance. Green Premium promises compliance with the latest regulations, transparency on environmental impacts, as well as circular and low-$CO_2$ products.

**Guide to assessing product sustainability** is a white paper that clarifies global eco-label standards and how to interpret environmental declarations.

Learn more about Green Premium >

Guide to assess a product's sustainability >

Transparency RoHS/REACh

## Well-being performance

- Mercury Free
- Rohs Exemption Information — Yes
- Pvc Free

## Certifications & Standards

| | |
|---|---|
| **Reach Regulation** | REACh Declaration |
| **Eu Rohs Directive** | Compliant with Exemptions |
| **China Rohs Regulation** | China RoHS declaration<br>Product out of China RoHS scope. Substance declaration for your information. |
| **Environmental Disclosure** | Product Environmental Profile |
| **Circularity Profile** | End of Life Information |
| **California Proposition 65** | WARNING: This product can expose you to chemicals including: DINP, which is known to the State of California to cause cancer, and DIDP, which is known to the State of California to cause birth defects or other reproductive harm. For more information go to www.P65Warnings.ca.gov |

# Micrologic™ 5.0 Electronic Trip Unit

ENGLISH

Instruction Bulletin

48049-207-05
Rev. 01, 07/2012

**Retain for future use.**

Schneider Electric™

ENGLISH

## Micrologic 5.0 Trip Unit

The Micrologic 5.0 trip unit provides selective (LSI) protection.

A. Long-time pickup (Ir) switch
B. Long-time delay (tr) switch
C. Short-time pickup (Isd) switch
D. Short-time delay (tsd) switch
E. Instantaneous pickup (Ii) switch
F. Test plug receptacle
G. Overload indicator light
H. Trip unit name

**Figure 4: Micrologic 5.0 Trip Unit**

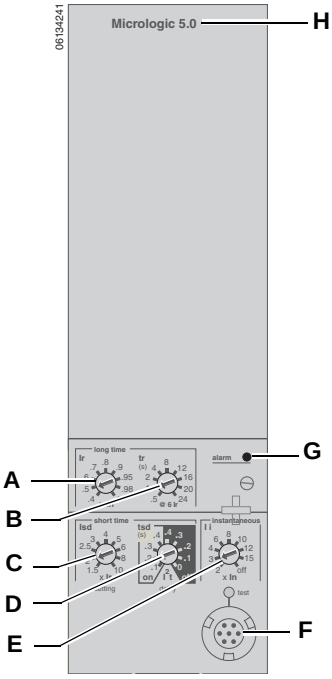


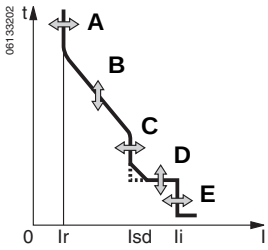



© 1999–2012 Schneider Electric All Rights Reserved

ENGLISH

# Trip Unit Switches

## Long-Time Protection

Long-time protection protects equipment against overloads.

- Long-time protection is standard on all trip units.
- The long-time pickup (Ir) (A) sets maximum current level (based on sensor plug rating In) which circuit breaker will carry continuously. If current exceeds this value, circuit breaker will trip after the preset time delay. The long-time pickup (Ir) is adjustable from 0.4–1.0 times the sensor plug rating (In).
- The long-time delay (tr) (B) sets the length of time that the circuit breaker will carry an overcurrent below the short-time or instantaneous pickup current level before tripping. See Table 1 for long-time delay settings.
- The overload indicator light (C) indicates that the Ir long-time pickup threshold has been exceeded.
- Both long-time pickup and long-time delay are on the field-replaceable adjustable rating plug. To change settings to more precisely match the application, various rating plugs are available. For instructions on replacing the rating plug, see Section 4—Adjustable Rating Plug Replacement.
- The In value can be changed by replacing the sensor plug below the trip unit. For further information, see the instructions packed with the sensor plug replacement kit.
- Long-time protection uses true RMS measurement.

Thermal imaging provides continuous temperature rise status of the wiring, both before and after the device trips. This allows the circuit breaker to respond to a series of overload conditions which could cause conductor overheating, but would go undetected if the long-time circuit was cleared every time the load dropped below the pickup setting or after every tripping event.

**NOTE:** If checking trip times, wait a minimum of 15 minutes after circuit breaker trips before resetting to allow the thermal imaging to reset completely to zero.

**Figure 5: Long-Time Protection Switches**

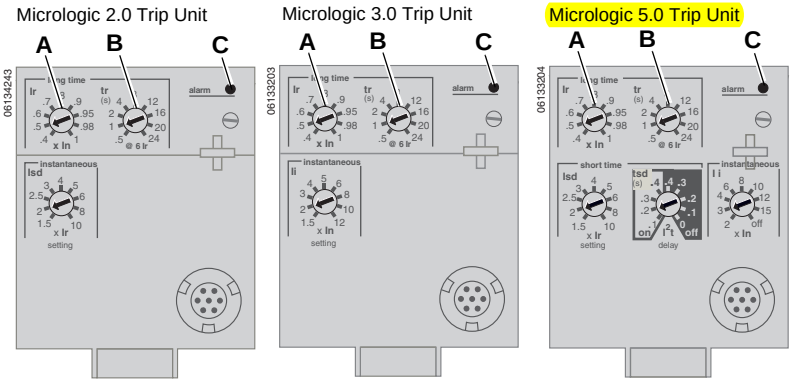


**Table 1: Micrologic Trip Unit Long-Time Delay Values**

| Setting[1] | Long-Time Delay in Seconds[2] | | | | | | | | |
|---|---|---|---|---|---|---|---|---|---|
| **tr at 1.5 x Ir** | 12.5 | 25 | 50 | 100 | 200 | 300 | 400 | 500 | 600 |
| **tr at 6 x Ir** | 0.5 | 1 | 2 | 4 | 8 | 12 | 16 | 20 | 24 |
| **tr at 7.2 x Ir** | 0.34[3] | 0.69 | 1.38 | 2.7 | 5.5 | 8.3 | 11 | 13.8 | 16.6 |

[1]In = sensor rating. Ir = In x long-time pickup. Trip threshold between 1.05 and 1.20 Ir.
[2]Time-delay accuracy +0/-20%
[3]For Micrologic 5.0 trip units, when tsd is set to 0.4 off or 0.4 on, then tr = 0.5 instead of 0.34.

© 1999–2012 Schneider Electric All Rights Reserved

ENGLISH

## Short-Time Protection

Short-time protection protects equipment against short circuits.

- Short-time protection is standard on 2.0 and 5.0 trip units. It is not available on 3.0 trip units.
- Short-time protection is based on the long-time pickup (Ir)
- The short-time pickup (Isd) (A) sets the current level (below instantaneous trip level) where the circuit breaker will trip after the preset time delay.
- The short-time delay (tsd) (B) sets the length of time that the circuit breaker will carry an overcurrent above the short-time pickup current level before tripping. It is adjustable on the 5.0 trip unit and factory set to zero on the 2.0 trip unit.
- The $I^2t$ on/$I^2t$ off option provides improved selectivity with downstream protective devices:
- With $I^2t$ off selected, fixed time delay is provided.
  - — With $I^2t$ on selected, inverse time $I^2t$ protection is provided up to 10 x Ir. Above 10 x Ir, a fixed time delay is provided.
  - — Intermittent currents in the short-time tripping range which do not last sufficiently long to trigger a trip are accumulated and shorten the trip delay appropriately.
- Setting tsd to the 0 setting turns off time-delay features.
- Short-time protection uses true RMS measurement.
- Short-time delay can be adjusted to provide selectivity with a downstream circuit breaker.

**Figure 6: Short-Time Protection Switches**

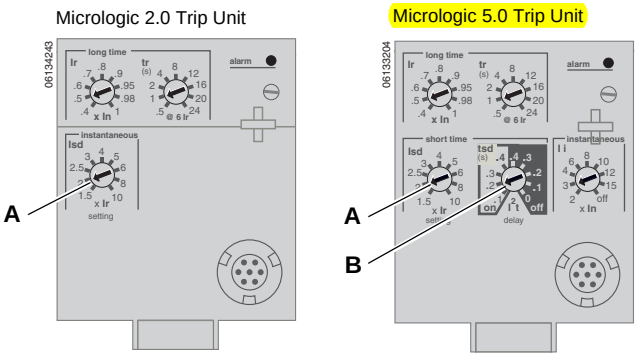


**Table 2: Micrologic Trip Unit Short-Time Delay Values**

| Setting | Short-Time Delay | | | | |
|---|---|---|---|---|---|
| **$I^2t$ off (Isd at 10 Ir) (seconds)** | 0 | 0.1 | 0.2 | 0.3 | 0.4 |
| **$I^2t$ on (Isd at 10 Ir) (seconds)** | – | 0.1 | 0.2 | 0.3 | 0.4 |
| **tsd (min. trip) (milliseconds)** | 20 | 80 | 140 | 230 | 350 |
| **tsd (max. trip) (milliseconds)** | 80 | 140 | 200 | 320 | 500 |


© 1999–2012 Schneider Electric All Rights Reserved

ENGLISH

### Instantaneous Protection

Instantaneous protection protects equipment against short circuits with no intentional time delay.

- Instantaneous protection (Ii) (A) is standard on 3.0 and 5.0 trip units.*
- Instantaneous protection for 2.0 trip units is based on the circuit breaker sensor rating (Ir).
- Instantaneous protection for 3.0 and 5.0 trip units is based on the long-time delay pickup (In).
- Circuit breaker open command is issued as soon as threshold current is exceeded.
- Instantaneous protection for 3.0 and 5.0 trip units use peak current measurement. Instantaneous protection for 2.0 trip units use RMS current measurement.
- When instantaneous protection switch is set to off, the instantaneous protection is disabled.

*Instantaneous protection on 2.0 trip units is achieved by using short-time protection (Isd) with short-time delay factory set to 0 (zero).

**Figure 7: Instantaneous Protection Switches**

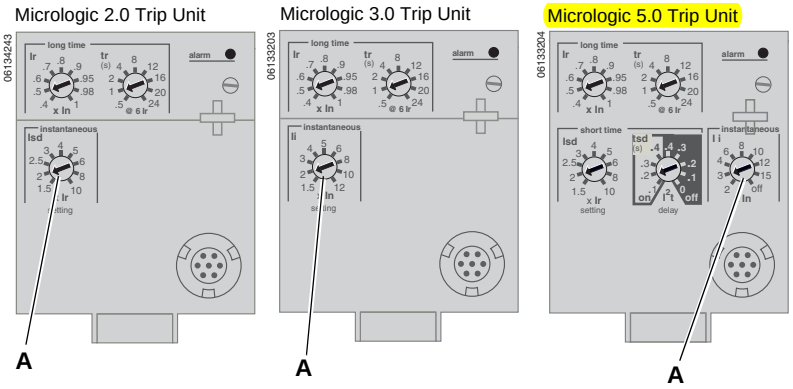


**Table 3: Micrologic Instantaneous Values**

| Setting | Interruption Current | | | | | | | | |
|---|---|---|---|---|---|---|---|---|---|
| **2.0 Isd (= Ir x..)** | 1.5 | 2 | 2.5 | 3 | 4 | 5 | 6 | 8 | 10 |
| **3.0 Ii (= In x..)** | 1.5 | 2 | 3 | 4 | 5 | 6 | 8 | 10 | 12 |
| **5.0 Ii (= In x..)** | 2 | 3 | 4 | 6 | 8 | 10 | 12 | 15 | off |

Ii = UL and ANSI instantaneous
Isd = IEC instantaneous (short-time with zero delay)
In = sensor rating
Ir = long-time pickup

## Overload Indicator Light

The overload indicator light (A) lights when the Ir long-time pickup level has been exceeded.

**Figure 8: Overload Indicator Lights**

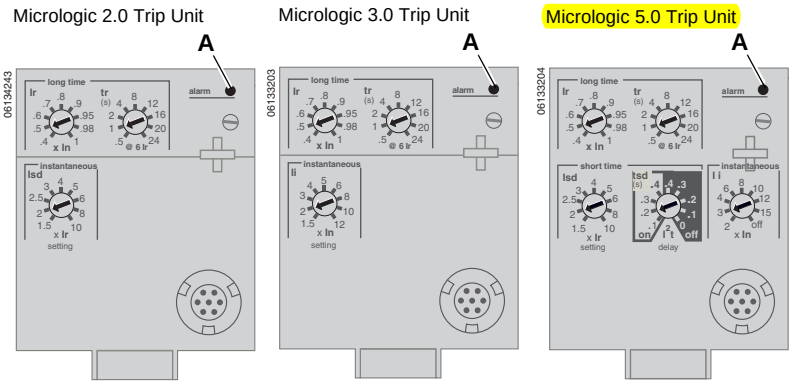


## Trip Unit Testing

Trip unit functions can be tested using primary injection testing or secondary injection testing.

© 1999–2012 Schneider Electric All Rights Reserved

ENGLISH

# Section 2—Operation

## Switch Adjustment

1. Open switch cover (A).
2. Adjust the appropriate switches (B) to desired values.
3. Replace switch cover. Use wire seal MICROTUSEAL (C), if necessary, to provide tamper evidence.

**Figure 9: Adjust Switch Settings**

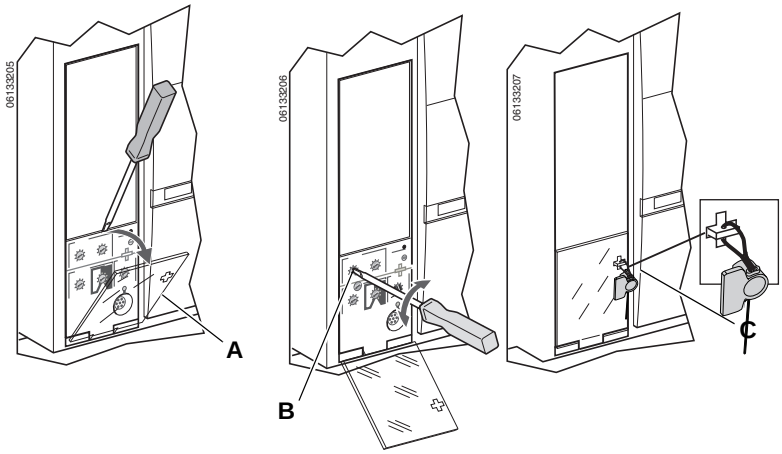


## Examples

Circuit breaker is rated 2000 A.

**Figure 10: Circuit Breaker Rating**

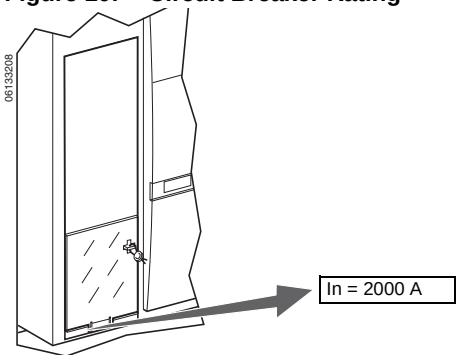



© 1999–2012 Schneider Electric All Rights Reserved

ENGLISH

## Micrologic 5.0 Trip Unit

1. Set pickup levels.

**Figure 15: Set Pickup Levels**

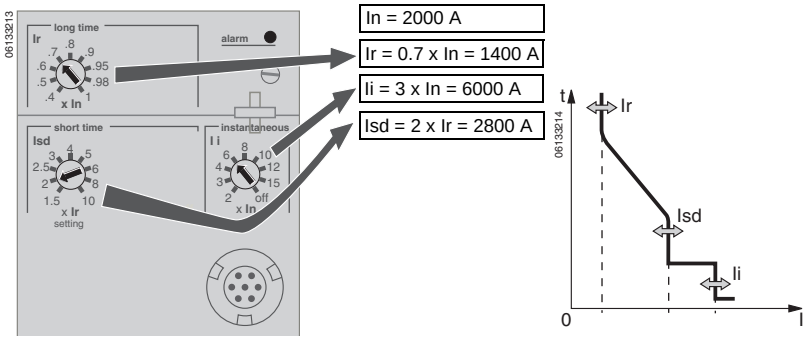


2. Set time delay.

**Figure 16: Set Time Delay**

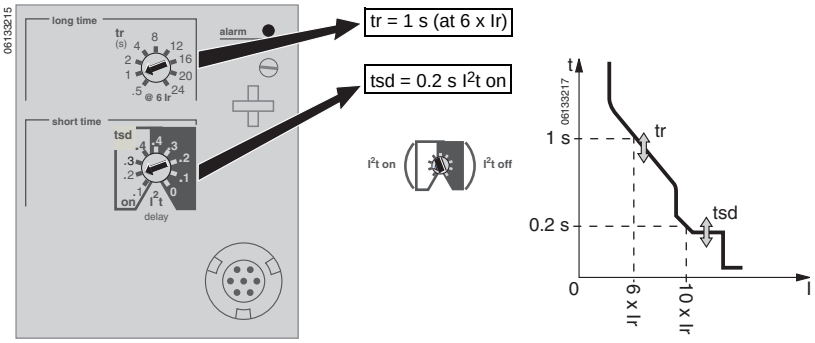


## Trip Unit Operation Verification

Use a test kit connected to the trip unit test plug receptacle (A) to verify trip unit is functioning as desired. See instructions shipped with test kit to perform verification tests.

**Figure 17: Verify Trip Unit Operation**

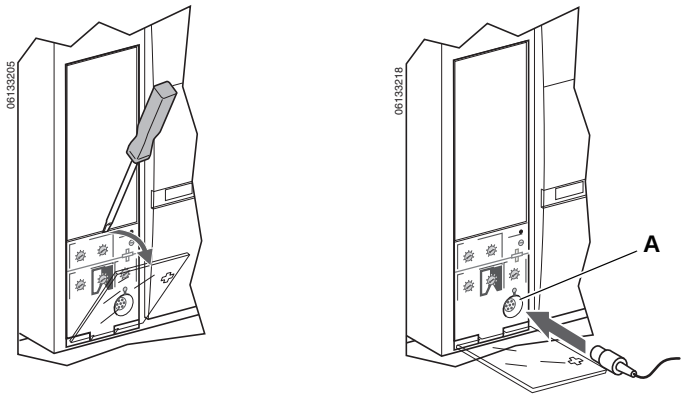



© 1999–2012 Schneider Electric All Rights Reserved

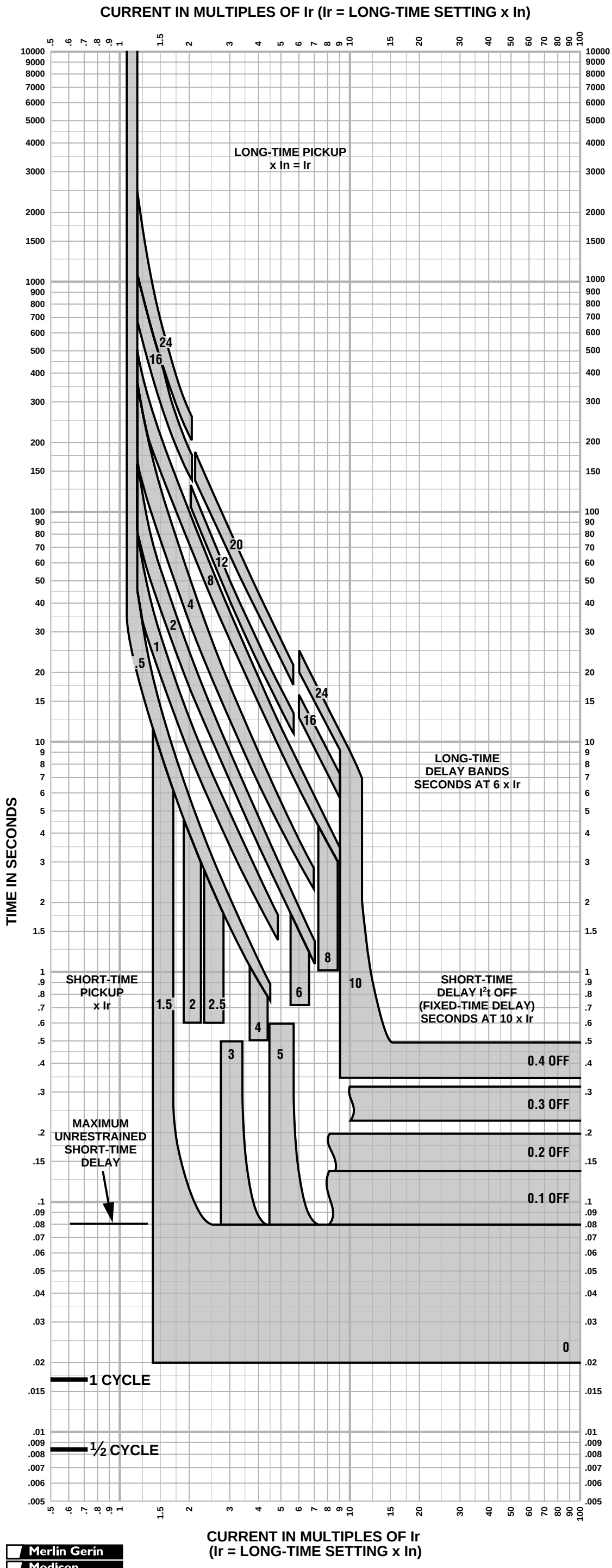


## MICROLOGIC® 5.0/6.0 A/P/H TRIP UNIT CHARACTERISTIC TRIP CURVE NO. 613-4

Long-time Pickup and Delay
Short-time Pickup and $I^2t$ OFF Delay

The time-current curve information is to be used for application and coordination purposes only.

Curves apply from -30°C to +60°C ambient temperature.

**Notes:**

1. There is a thermal-imaging effect that can act to shorten the long-time delay. The thermal-imaging effect comes into play if a current above the long-time delay pickup value exists for a time and then is cleared by the tripping of a downstream device or the circuit breaker itself. A subsequent overload will cause the circuit breaker to trip in a shorter time than normal. The amount of time delay reduction is inverse to the amount of time that has elapsed since the previous overload. Approximately 20 minutes is required between overloads to completely reset thermal-imaging.
2. The end of the curve is determined by the interrupting rating of the circuit breaker.
3. With zone-selective interlocking on, short-time delay utilized and no restraining signal, the maximum unrestrained short-time delay time band applies regardless of the setting.
4. Total clearing times shown include the response times of the trip unit, the circuit breaker opening, and the extinction of the current.
5. For a withstand circuit breaker, instantaneous can be turned OFF. See 613-7 for instantaneous trip curve. See 613-10 for instantaneous override values.
6. Overload indicator illuminates at 100%.

Merlin Gerin
Modicon
Square D
Telemecanique
Federal Pioneer
Federal Pacific
*Schneider Electric Brands*

Schneider Electric

© 2000 Schneider Electric all rights reserved

Curve No. 0613TC0004
December 2000
Drawing No. B48095-613-04

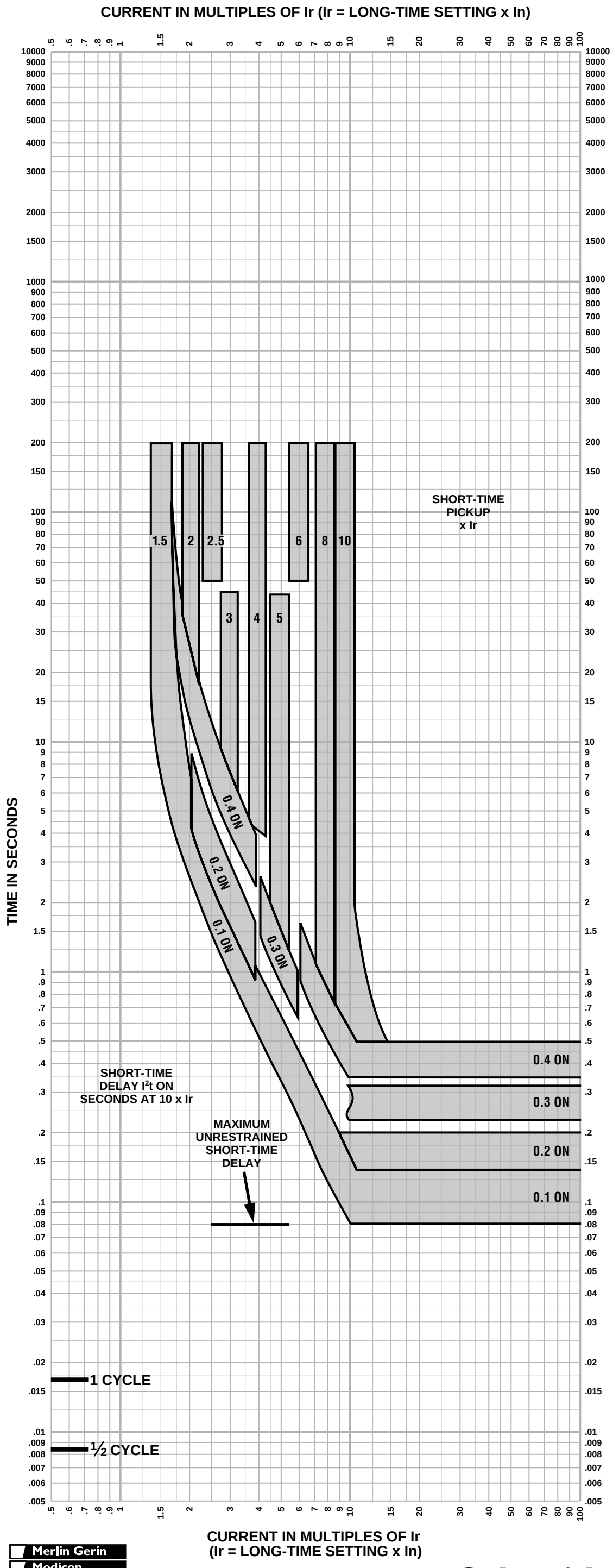


## MICROLOGIC® 5.0/6.0 A/P/H TRIP UNIT CHARACTERISTIC TRIP CURVE NO. 613-5

Short-time Pickup and $I^2t$ ON Delay

The time-current curve information is to be used for application and coordination purposes only.

Curves apply from -30°C to +60°C ambient temperature.

**Notes:**

1. There is a thermal-imaging effect that can act to shorten the long-time delay. The thermal-imaging effect comes into play if a current above the long-time delay pickup value exists for a time and then is cleared by the tripping of a downstream device or the circuit breaker itself. A subsequent overload will cause the circuit breaker to trip in a shorter time than normal. The amount of time delay reduction is inverse to the amount of time that has elapsed since the previous overload. Approximately 20 minutes is required between overloads to completely reset thermal-imaging.
2. The end of the curve is determined by the interrupting rating of the circuit breaker.
3. With zone-selective interlocking on, short-time delay utilized and no restraining signal, the maximum unrestrained short-time delay time band applies regardless of the setting.
4. Total clearing times shown include the response times of the trip unit, the circuit breaker opening, and the extinction of the current.
5. For a withstand circuit breaker, instantaneous can be turned OFF. See 613-7 for instantaneous trip curve. See 613-10 for instantaneous override values.
6. See 613-4 for long-time pickup and delay trip curve.

Merlin Gerin
Modicon
Square D
Telemecanique
Federal Pioneer
Federal Pacific
*Schneider Electric Brands*

Schneider Electric

© 2000 Schneider Electric all rights reserved

Curve No. 0613TC0005
December 2000
Drawing No. B48095-613-05

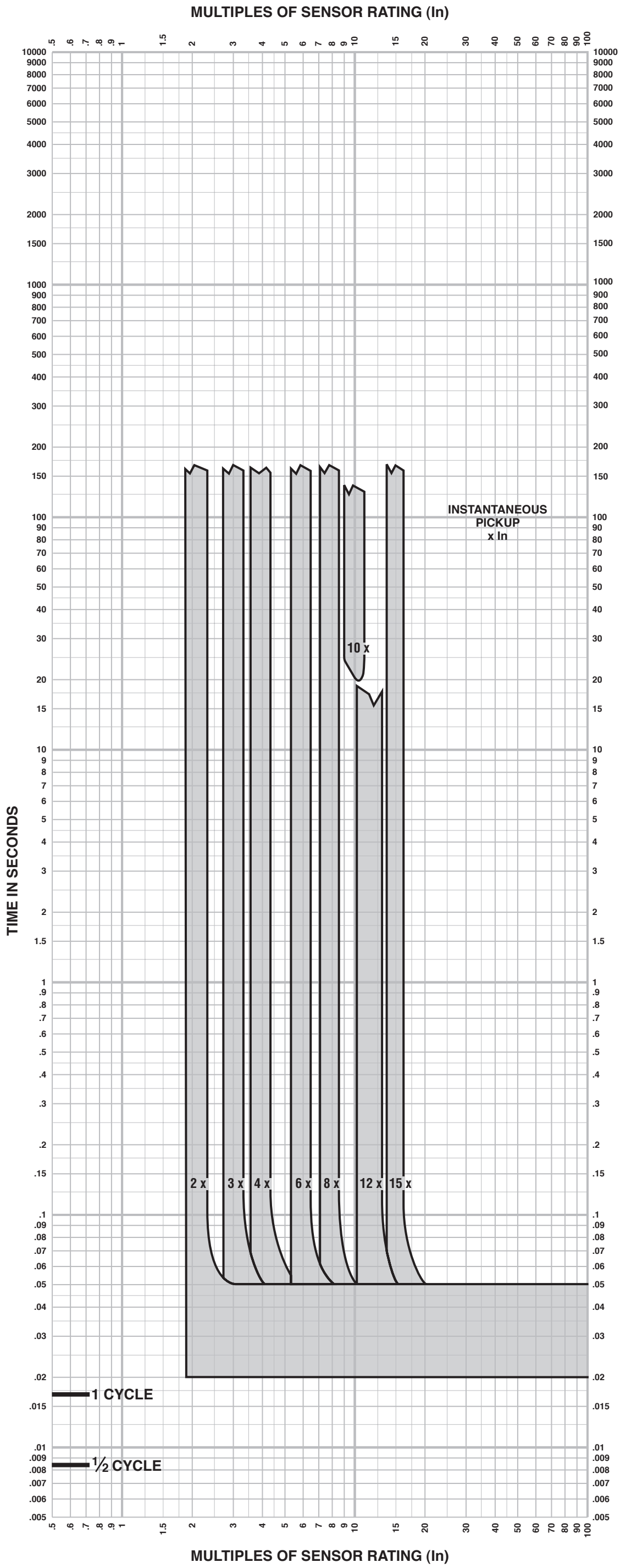


## MICROLOGIC® 5.0/6.0 A/P/H TRIP UNIT CHARACTERISTIC TRIP CURVE NO. 613-7

Instantaneous Pickup
2x–15x and OFF

The time-current curve information is to be used for application and coordination purposes only.

Curves apply from -30° to +60°C ambient temperature.

**Notes:**

1. The end of the curve is determined by the interrupting rating of the circuit breaker.
2. Total clearing times shown include the response times of the trip unit, the circuit breaker opening, and the extinction of the current.
3. The instantaneous region of the trip curve shows maximum total clearing times. Actual clearing times in this region can vary depending on the circuit breaker mechanism design and other factors. The actual clearing time can be considerably faster than indicated. Contact your local Sales Office for additional information.
4. For a withstand circuit breaker, instantaneous can be turned OFF. See 613-7 for instantaneous trip curve. See 613-10 for instantaneous override values.
5. See 613-4 and 613-5 for long-time pickup, long-time delay, short-time pickup, and short-time delay trip curves.

a brand of Schneider Electric

Merlin Gerin
Square D
Telemecanique

Schneider Electric

© 2008 Schneider Electric all rights reserved

Curve No. 0613TC0807
January 2008
Drawing No. 48095-0613-07
(Replaces 0613TC0007)

# INSTANTANEOUS OVERRIDE VALUES NO. 613-10

## MASTERPACT NW/NT

| ANSI CB Model No. | Inst. Override (kA RMS) +/- 10% |
|---|---|
| NW08N1 ★ | 24 |
| NW08N1 | None |
| NW16N1 | None |
| NW08H1 ★ | 24 |
| NW08H1 | None |
| NW16H1 | None |
| NW20H1 | None |
| NW32H1 | None |
| NW08H2 ★ | 24 |
| NW08H2 | None |
| NW16H2 | None |
| NW20H2 | None |
| NW32H2 | None |
| NW40H2 | None |
| NW50H2 | None |
| NW08H3 ★ | 24 |
| NW08H3 | 85 |
| NW16H3 | 85 |
| NW20H3 | 85 |
| NW32H3 | 85 |
| NW40H3 | 85 |
| NW50H3 | 85 |
| NW08L1 ★ | 24 |
| NW08L1 | 35 |
| NW08L1F | 24 |
| NW16L1 | 35 |
| NW16L1F | 24 |
| NW20L1 | 35 |
| NW20L1F | 24 |
| NW32L1 | 117 |
| NW40L1 | 117 |
| NW50L1 | 117 |
| NW08HA | None |
| NW16HA | None |
| NW20HA | None |
| NW32HA | None |
| NW40HA | None |
| NW50HA | None |
| NW08HF | 85 |
| NW16HF | 85 |
| NW20HF | 85 |
| NW32HF | 85 |
| NW40HF | 85 |
| NW50HF | 85 |
| NW08HC | 35 |
| NW16HC | 35 |
| NW20HC | 35 |
| NW32HC | 117 |
| NW40HC | 117 |
| NW50HC | 117 |
| NT08N1 ★ | 24 |
| NT08N1 | None |
| NT08H1 ★ | 24 |
| NT08H1 | None |
| NT08L1F | 10 |
| NT08NA | None |

## MASTERPACT NW/NT

| UL CB Model No. | Inst. Override (kA RMS) +/- 10% |
|---|---|
| NW08N ★ | 24 |
| NW08N | 40 |
| NW12N | 40 |
| NW16N | 40 |
| NW20N | 40 |
| NW08H ★ | 24 |
| NW08H | 40 |
| NW12H | 40 |
| NW16H | 40 |
| NW20H | 40 |
| NW25H | 65 |
| NW30H | 65 |
| NW40H | 75 |
| NW50H | 75 |
| NW60H | 75 |
| NW08L ★ | 24 |
| NW08L | 35 |
| NW08LF | 24 |
| NW12L | 35 |
| NW12LF | 24 |
| NW16L | 35 |
| NW16LF | 24 |
| NW20L | 65 |
| NW20LF | 24 |
| NW25L | 65 |
| NW30L | 65 |
| NW40L | 75 |
| NW50L | 75 |
| NW60L | 75 |
| NW08HF | 40 |
| NW12HF | 40 |
| NW16HF | 40 |
| NW20HF | 40 |
| NW25HF | 65 |
| NW30HF | 65 |
| NW40HF | 75 |
| NW50HF | 75 |
| NW60HF | 75 |
| NW08HB | 35 |
| NW12HB | 35 |
| NW16HB | 35 |
| NW20HB | 65 |
| NW25HB | 65 |
| NW30HB | 65 |
| NW40HB | 75 |
| NW50HB | 75 |
| NW60HB | 75 |
| NT08N ★ | 24 |
| NT08N | 40 |
| NT12N | 40 |
| NT16N | 40 |
| NT08H ★ | 24 |
| NT08H | 40 |
| NT12H | 40 |
| NT16H | 40 |
| NT08L1 | 10 |
| NT12L1 | 10 |
| NT16L1 | 10 |
| NT08L | 10 |
| NT08LF | 10 |
| NT12L | 10 |
| NT16L | 10 |
| NT12LF | 10 |
| NT08HF | 40 |
| NT12HF | 40 |

★ Maximum sensor plug 250 A

## MASTERPACT NW/NT

| IEC CB Model No. | Inst. Override (kA RMS) +/- 10% |
|---|---|
| NW08N1 | None |
| NW10N1 | None |
| NW12N1 | None |
| NW16N1 | None |
| NW08H1 | None |
| NW10H1 | None |
| NW12H1 | None |
| NW16H1 | None |
| NW20H1 | None |
| NW25H1 | None |
| NW32H1 | None |
| NW40H1 | None |
| NW50H1 | None |
| NW63H1 | None |
| NW08H2 ★ | 24 |
| NW08H2 | 85 |
| NW10H2 | 85 |
| NW16H2 | 85 |
| NW20H2 | 85 |
| NW25H2 | 85 |
| NW32H2 | 85 |
| NW40H2 | 85 |
| NW50H2 | 117 |
| NW63H2 | 117 |
| NW20H3 | 65 |
| NW25H3 | 65 |
| NW32H3 | 65 |
| NW40H3 | 65 |
| NW08L1 ★ | 24 |
| NW08L1 | 35 |
| NW10L1 | 35 |
| NW12L1 | 35 |
| NW16L1 | 35 |
| NW20L1 | 35 |
| NW08H10 | None |
| NW10H10 | None |
| NW12H10 | None |
| NW16H10 | None |
| NW20H10 | None |
| NW25H10 | None |
| NW32H10 | None |
| NW40H10 | None |
| NW08NA | None |
| NW10NA | None |
| NW16NA | None |
| NW08HA | None |
| NW10HA | None |
| NW12HA | None |
| NW16HA | None |
| NW20HA | None |
| NW25HA | None |
| NW32HA | None |
| NW40HA | None |
| NW50HA | None |
| NW63HA | None |
| NW08HF | 85 |
| NW10HF | 85 |
| NW12HF | 85 |
| NW16HF | 85 |
| NW20HF | 85 |
| NW25HF | 85 |
| NW32HF | 85 |
| NW40HF | 85 |
| NW08HA10 | None |
| NW10HA10 | None |
| NW12HA10 | None |
| NW16HA10 | None |
| NW20HA10 | None |
| NW25HA10 | None |
| NW32HA10 | None |
| NW40HA10 | None |
| NT08H1 | None |
| NT10H1 | None |
| NT12H1 | None |
| NT16H1 | None |
| NT08L1 | 10 |
| NT08H10 | None |
| NT10H10 | None |
| NT12H10 | None |
| NT16H10 | None |
| NT08HA | None |
| NT10HA | None |
| NT12HA | None |
| NT16HA | None |
| NT08HA10 | None |
| NT10HA10 | None |
| NT12HA10 | None |
| NT16HA10 | None |

## POWERPACT / HORIZON / SELECT / COMPACT

| UL/IEC CB Model No. | Inst. Override (kA RMS) +/- 10% |
|---|---|
| RG 600 | 57 |
| RG 800 | 57 |
| RG 1000 | 57 |
| RG 1200 | 57 |
| RG 1600 | 57 |
| RG 2000 | 57 |
| RG 2500 | 57 |
| RJ 600 | 48▲ |
| RJ 800 | 48▲ |
| RJ 1000 | 48▲ |
| RJ 1200 | 48▲ |
| RJ 1600 | 48▲ |
| RJ 2000 | 48▲ |
| RJ 2500 | 48▲ |
| RK 600 | 57 |
| RK 800 | 57 |
| RK 1000 | 57 |
| RK 1200 | 57 |
| RK 1600 | 57 |
| RK 2000 | 57 |
| RK 2500 | 57 |
| RL 600 | 48▲ |
| RL 800 | 48▲ |
| RL 1000 | 48▲ |
| RL 1200 | 48▲ |
| RL 1600 | 48▲ |
| RL 2000 | 48▲ |
| RL 2500 | 48▲ |
| PG 250 | 24 |
| PG 400 | 24 |
| PG 600 | 24 |
| PG 800 | 24 |
| PG 1000 | 24 |
| PG 1200 | 24 |
| PJ 250 | 7 |
| PJ 400 | 10 |
| PJ 600 | 10 |
| PJ 800 | 10 |
| PJ 1000 | 10 |
| PJ 1200 | 10 |
| PK 250 | 24 |
| PK 400 | 24 |
| PK 600 | 24 |
| PK 800 | 24 |
| PK 1000 | 24 |
| PK 1200 | 24 |
| PL 250 | 7 |
| PL 400 | 10 |
| PL 600 | 10 |
| PL 800 | 10 |
| PL 1000 | 10 |
| PL 1200 | 10 |
| MG 300 | 12▲ |
| MG 350 | 12▲ |
| MG 400 | 12▲ |
| MG 450 | 12▲ |
| MG 500 | 12▲ |
| MG 600 | 12▲ |
| MG 700 | 12▲ |
| MG 800 | 12▲ |
| MJ 300 | 12▲ |
| MJ 350 | 12▲ |
| MJ 400 | 12▲ |
| MJ 450 | 12▲ |
| MJ 500 | 12▲ |
| MJ 600 | 12▲ |
| MJ 700 | 12▲ |
| MJ 800 | 12▲ |

| IEC CB Model No. | Inst. Override (kA RMS) +/- 10% |
|---|---|
| NS 800b N | 57 |
| NS 1000b N | 57 |
| NS 1250b N | 57 |
| NS 1600b N | 57 |
| NS 2000 N | 57 |
| NS 2500 N | 57 |
| NS 3200 N | 57 |
| NS 800b H | 48▲ |
| NS 1000b H | 48▲ |
| NS 1250b H | 48▲ |
| NS 1600b H | 48▲ |
| NS 2000 H | 48▲ |
| NS 2500 H | 48▲ |
| NS 3200 H | 48▲ |
| NS 630b N | 24 |
| NS 800 N | 24 |
| NS 1000 N | 24 |
| NS 1250 N | 24 |
| NS 1600 N | 24 |
| NS 630b H | 24 |
| NS 800 H | 24 |
| NS 1000 H | 24 |
| NS 1250 H | 24 |
| NS 1600 H | 24 |
| NS 630b L | 24 |
| NS 800 L | 24 |
| NS 1000 L | 24 |
| NS 1250 L | 24 |
| NS 1600 L | 24 |

▲ Tolerance +/- 15%

**Note:**

Faults at or above instantaneous override value will be cleared at 25 msec or less.

brands of Schneider Electric

Merlin Gerin
Square D
Telemecanique

Schneider Electric

© 2006 Schneider Electric All Rights Reserved

Curve No. 0613TC0610
February 2006
Drawing No. 48095-0613-10
(Replaces 0613TC0410)

QTY 4

# CUMMINS PREMIUM®

## C34

### KEEP YOUR DAY POWERED WITH QUALITY AND DURABILITY.

Cummins offers batteries of outstanding performance and battery warranties for any transport which needs to resist high or low temperatures.

- 12-volt, heavy-duty commercial battery.
- Reliable battery for any weather.
- 18-month free replacement.
- Anchor bonded for vibration resistance.
- Sealed and reinforced polypropylene case.
- Maintenance free plate materials.

## SPECIFICATIONS

| | |
|---|---|
| Group Size | 34 |
| Terminal BCI Figure | SAE |
| Voltage | 12 |
| CCA 0°F (-18°C) (SAE-Standard) | 630 |
| CA 32°F (0°C) (SAE-Standard) | 825 |
| RC @80°F (27°C) (SAE-Standard) | 100 |
| Ampere Hour | 42 |
| Weight (lb) | 35.9 |
| Electrolyte Quantity Gallons | 0.916 |
| Electrolyte Quantity Fluid Ounces | 117.3 |

### BATTERY DIMENSIONS

| Terminal BCI Figure | | |
|---|---|---|
| SAE | Length: | 10 5/16" |
| | Width: | 6 13/16" |
| | Height: | 7 13/16" |

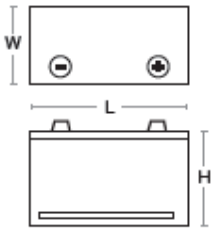


*This battery is only available for purchase in the US

### TYPE OF ELECTROLYTE

- Sulfuric Acid
- Water
- Solution

**SDS** #UN2794

**For more information contact us: 1-800-CUMMINS™**

©2019 Cummins Inc., Box 3005, Columbus, IN 47202-3005 Bulletin 5600247 Printed in U.S.A. 9/19

SENS
STORED ENERGY SYSTEMS

# MicroGenius® 2

## Genset Engine Start Battery Charger

12 & 24 Volts, 6 to 25 Amps

## Small. Powerful. Rugged.

Standard J1939 and Modbus communications.

**Hardened switchmode powertrain**

**UL Listed and NFPA 110 approved**

**Designed & tested for industrial applications**

**Contact**
Stored Energy Systems LLC
Longmont, Colorado, USA

www.sens-usa.com
(303) 678-7500
info@sens-usa.com

CAD drawings, firmware, certifications, and technical documentation are available on our website.

# Robust reliability. More power in less space.

## State-of-the-art features

SENS MicroGenius 2 advanced technology genset battery chargers deliver from 6 to 25 amps at 12 or 24 volts*.

MicroGenius is the only family of genset chargers that meets all modern battery charging and energy efficiency regulations.

- UL listed to category BBHH required for “Emergency Generators”
- Legal for sale under California and Oregon energy efficiency regulations
- All units survive harsh EN 60068 standard vibration abuse at the 4G level

*Consult factory for higher output voltage MicroGenius chargers up to 120 volts DC nominal

## Patented Dynamic Boost™ charging

Dynamic Boost charges batteries faster and more completely than other conventional chargers, with lower risk of overcharge.

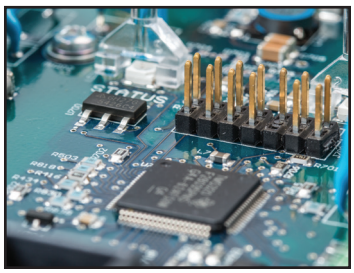

## Safer, more reliable battery performance

Revolutionary HELIX™ (High Efficiency, LIfe-eXtending) technology reduces the risk of early & catastrophic genset battery failures.

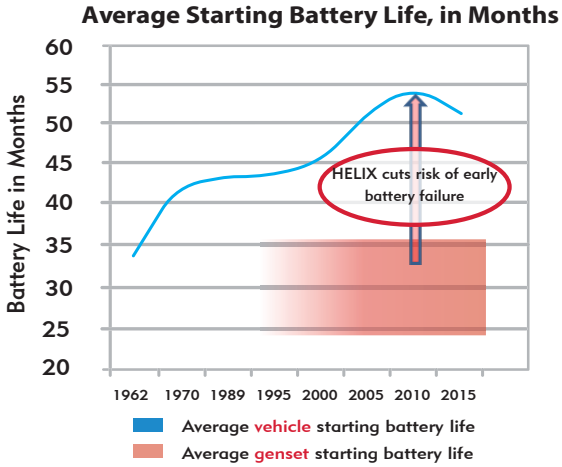


## NFPA 110 approved - eliminate battery maintenance

Optional engine cranking voltage drop monitoring eliminates NFPA 110 battery maintenance

CRANKING VOLTAGE DROP

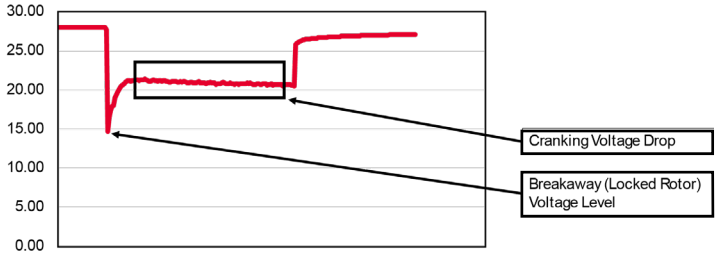

# MicroGenius 2

7.2 lbs. (3.3 kg) maximum

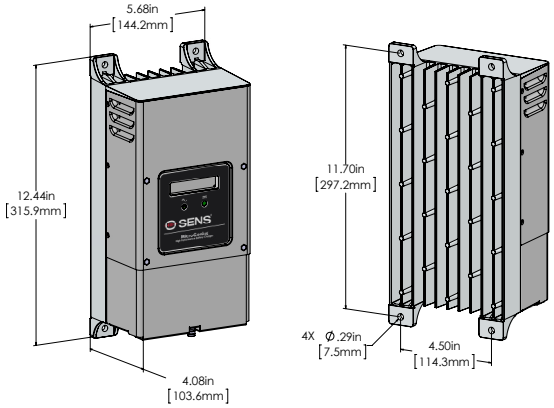


## Specifications for MicroGenius 2

| | | |
|---|---|---|
| AC input | VAC, Hz | 90-265[1] single-phase VAC, 47-63Hz<br>DC voltage applied at AC terminals: 100-375 VDC, 0Hz (≥500W models only, output limited to 2/3 rated power) |
| | Protection | Supplementary overcurrent protection fuse, transient protected to EN 61000-4-5 level 4 |
| | Power factor & efficiency | PF >.95 typical; max efficiency 93-95%; meets CEC Title 20 Efficiency Regulations; standby AC draw <3W for 180-450W and <7W for 500-750W |
| DC output | Volts, amps | 12V/24V nom. at 10A/6A, 12A/10A, 15A/15A[1], 20A/20A, or 25A/25A |
| | Charging modes | Multi-stage, including float, boost and two additional HELIX voltages in flooded lead-acid battery program |
| | Current limit | Factory set at 100% of rating. Field adjustable with optional keypad or from PC.[2] |
| | Charging characteristic | Constant voltage, current limited; patented Dynamic Boost control and HELIX (when FLA battery is selected) |
| | Line & load regulation | ±0.5% |
| | Output ripple | < 30 mVrms with or without battery. Delivers fast-responding, stable, well-filtered DC without battery. |
| | Battery temp. compensation | Standard. Optional remote battery temperature probe.[3] |
| | Output protection | Current limit, supplementary overcurrent protection fuse, transient protected |
| | Dead battery charge | Starts into, and recharges zero volt battery without user intervention |
| | Parallel operation | Two or more chargers operate with all modes synchronized for increased current or fault tolerance[4] |
| Adjustment & Controls | Charge mode control | Fully automatic patented Dynamic Boost system (VRLA or ultracap charging program disables boost mode). Manually initiated timed boost & commissioning modes available with keypad option.[5] |
| | Adjustments | 12 or 24-volt; battery type program; fine voltage setting; alarm setpoints; alarm relay mapping |
| | Battery type programs | Flooded lead-acid, AGM, NiZn, NaCl (salt), NiCd, VRLA, ultracapacitor |
| | Field voltage adjustment | 3 methods: jumper pins, from front panel keypad[5] or from PC[2] |
| Status display | LEDs | Two multi-color front panel status LEDs |
| | Metering & status display | Optional. Voltmeter accurate to +1%; ammeter to +1%; 20-character display of status & alarm messages.[6] |
| Alarms | Alarms | Factory set, field reconfigurable, latching or non-latching. Alarm functions announced on the J1939 and Modbus ports and on the optional LCD include summary, AC fail, charger fail, high DC volts, low DC volts, low cranking volts, overvoltage shutdown, reverse polarity battery, incompatible battery, invalid settings, I/O bus inactive, thermal fold back, no temperature probe, current limiting, ground fault and low current. Any alarm is assignable to Form C contacts. |
| | Alarms: Form C contacts | Optional. Two[7] or five[8] Form C contacts, each rated 30V, 2A resistive, assignable. Standard configuration includes summary, AC fail, charger fail, high DC volts, low DC volts and low cranking volts. |
| Networking | J1939 communications | CAN 2.0 extended ID on RJ45 port |
| | Modbus communications | Modbus RS-485 on RJ45 port |
| | SENSbus/USB | Proprietary bus for connection of paralleled chargers, SENS accessories and SENS Setup Utility |
| Environmental | Operating temperature[9] | Convection cooled; -40C to +70C; full spec from -40C to +50C[10] |
| | Humidity | 5% to 95%, non-condensing |
| | Ingress protection | NEMA2/IP22; UL Listed "Rainproof" |
| | Vibration & shock resistance | Vib: Swept Sine (EN60068-2-6): 4G, 18-500Hz, 3 axes. Random: 20-500Hz, .01G²/Hz. Shock: EN 60068-2-27 (15G) |
| | Electrical transient | ANSI/IEEE C62.41 & EN 61000-4-12 on power terminals |
| Abuse protection | Reverse polarity | Charger self-protects without fuse clearing. Indication via LED & optional LCD. |
| | Wrong voltage battery | Charger-battery voltage mismatch shuts down charger. Indication via LED & optional LCD. |
| | Overvoltage shutdown | Selective; shutdown only operates if charger causes the overvoltage condition |
| | Overtemperature protection | Gradual output power reduction if heatsink temperature becomes excessive |
| Regulatory compliance | North America | C-UL Listed for US & Canada: UL 1236 categories BBGQ, BBHH, BBJY and QWIR[11], CSA 22.2, No. 107.2. Certified to UL 1236 supplements SB (marine), SC (fire pump) and SE (emergency generator). |
| | | NFPA-70, NFPA-110[12] |
| | | FCC Part 15, Class B, ≥ 600W models Class B |
| | | Seismic: Rigid & non-structure wall mount; max $S_{DS}$ of 2.5G. IBC 2000-2022, Calif. BC 2007-2022 |
| | | American Bureau of Shipping, type approved |
| | European Union (CE) | EMC: 2014/30/EU (EN 61000-6-2 & EN 61000-6-4) |
| | | LVD: 2014/35/EU (EN 60335-1 & EN 60335-2-29) |
| | | RoHS: 2015/863 (EN 63000) |
| Construction | Housing/configuration | Die-cast aluminum heatsink base with stainless steel covers & fasteners |
| | Connections | AC & DC terminal blocks: 20 to 10AWG. J1939 and Modbus-485: RJ45. Form C alarms: 28 to 16AWG |

1 When set for 24-volt output, full 15A output of 450W available above 170 VAC input, 12A output current max between 100 VAC and 170 VAC input 2 Requires USB charger option or adapter SENS p/n 209254 plus free SENS software available at www.sens-usa.com 3 Remote battery temp sensor is optional. Order SENS p/n 209481 4 Requires standard RJ45 network cable to connect paralleling bus. Order SENS p/n 208118-72 (72-inch length) or 208118-180 (180-inch length) 5 Requires that digit 12 of the model number be F 6 Requires that digit 12 of the model number be D, E, or F 7 Models with E as digit 12 of the model number include 2 ea. Form C alarm contacts 8 Models with D or F as digit 12 of the model number include 5 ea. Form C alarm contacts 9 At 65 deg. C and above the LCD display may be unreadable and display life will be reduced 10 Full spec to +55C for 180W and +40C for 450W 11 300W and 450W models only 12 All chargers equipped with an alarm / display board meet NFPA-110 requirements. For chargers without an alarm / display board to meet NFPA-110, charger volts, amps and charger fail alarm available on the J1939 port must be annunciated by the genset control panel.

# How To Order MicroGenius 2

| Product Type | Power | - | Output Volts | - | Output Current | - | Alms & Comms | Special Options |
|---|---|---|---|---|---|---|---|---|
| M | 4 | - | 22 | - | 1515 | - | F | N |
| A | B | | C | | D | | E | F |

| | Parameter | Code | Value |
|---|---|---|---|
| A | Product Family | M | MicroGenius 2 |
| B | Power | 1<br>3<br>4<br>6<br>7 | 180W<br>300W<br>450W<br>600W<br>750W |
| C | Output Voltage | 22 | 12/24V |
| D | Output Current | 1006<br>1210<br>1515<br>2020<br>2525 | 10A @ 12V; 6A @ 24V (180W only)<br>12A @ 12V; 10A @ 24V (300W only)<br>15A @ 12/24V (450W only)<br>20/20A @ 12/24V (600W only)<br>25/25A @ 12/24V (750W only) |
| E | Alarm & Communication Options | A<br>D<br>E<br>F<br>G | Base model; includes J1939 & Modbus RS-485 communications<br>Base model + LCD + USB-C + 5 ea. Form C alarm relays<br>Base model + LCD + USB-C + 2 ea. Form C alarm relays<br>Base model + LCD + USB-C + 5 ea. Form C relays + keypad control<br>Base model + LCD + USB-C + 5 ea. Form C relays + keypad control + Modbus TCP/IP |
| F | Special Options | F<br>G<br>L<br>N<br>T<br>V<br>W | FC to MicroGenius 2 adapter plate (enclosed charger only)<br>MicroGenius 150 to MicroGenius 2 adapter plate (enclosed charger only)<br>LC to MicroGenius 2 adapter plate (enclosed charger only)<br>NRG10 to MicroGenius 2 adapter plate (enclosed charger only)<br>Remote Temperature Sensor shipped with charger<br>Includes cranking voltage drop monitoring<br>Includes cranking voltage drop monitoring and 6ft remote temperature sensor |

Contact SENS or your local sales representative for additional specification, engineering and installation information, or visit SENS' website for latest available data. Specification subject to change without notice.

SENS, Stored Energy Systems, the battery/rectifier logo, Dynamic Boost, HELIX and MicroGenius are trademarks of Stored Energy Systems LLC. This product is covered by one or more patents: www.sens-usa.com/patents.

© Stored Energy Systems, LLC 2017

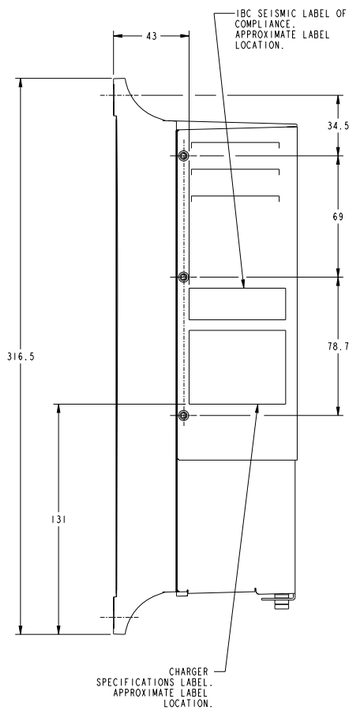


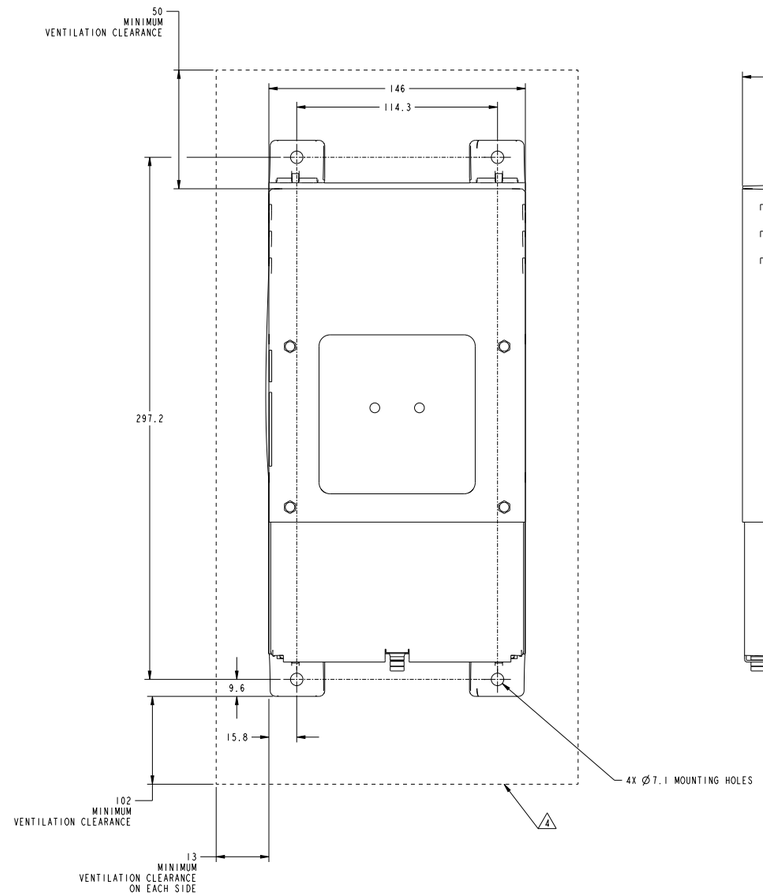


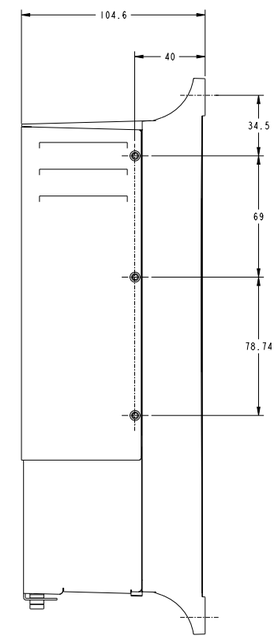


NOTES:

1. BATTERY CHARGER SPECIFICATIONS:
   OUTPUT VOLTAGE-22: 12 OR 24 VOLTS.
   OUTPUT CURRENT-10: 12 AMP @12V DC OR 10 AMP @24V DC
   INPUT VOLTAGE FREQUENCY-H: 90 TO 265 VAC @47 OR 63 Hz.
   OPTIONAL CODE D (ALARM & COMMUNICATION): BASE MODEL + LCD + 5 FORM C ALARM RELAYS
2. ALL DIMENSIONS ARE FOR REFERENCE ONLY.
3. REFER TO CUMMINS APPLICATION MANUAL AND BATTERY CHARGER INSTALLATION MANUAL (INCLUDED WITH CHARGER). USER MUST CHECK BATTERY CHARGER LOAD CAPABILITES IN THE APPLICATION MANUAL PRIOR TO CONNECTING CONTROLLER AND ACCESSORY LOADS.
4. LINE DEPICTS MINIMUM VENT CLEARANCE AREA.
5. NOMINAL WEIGHT BASED ON SUPPLIER DATA: (2.7 KG) NOT FOR INSPECTION.
6. CUMMINS SPECIFIC SUPPLIER'S INSTALLATION AND OPERATION MANUAL TO BE INCLUDED WITH BATTERY CHARGER.

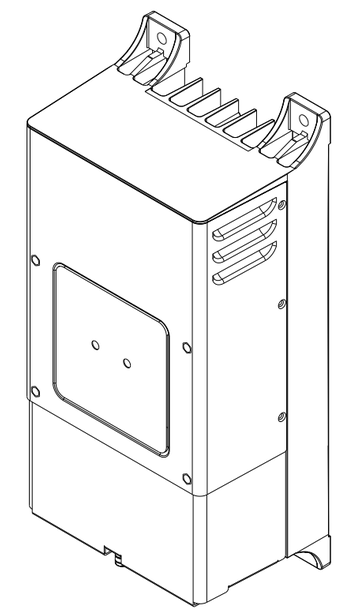

3D VIEW

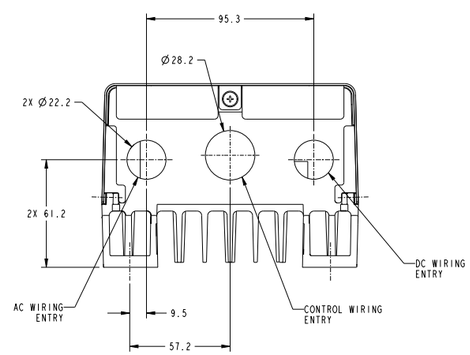


| MODEL/PLATFORM: THOR | THIS PART IS SIMILAR TO: |
|---|---|
| Cummins Inc. | |
| DIMENSIONS ARE IN: MILLIMETERS [ ] ARE IN: - SIZE: A0 SCALE: 1/1 | |
| DIMENSIONING AND TOLERANCING PER: ASME Y14.5-2009 THIRD ANGLE PROJECTION | CAD SYSTEM PTC® Creo® Parametric |

Document Generated: **21MAR2023 17:32 GMT**

Cummins Data Classification:
**Cummins Confidential**

This document (and the information shown thereon) is **Confidential and Proprietary** and shall not be disclosed to others in hard copy or electronic form, reproduced by any means, or used for any purpose without written consent of Cummins Inc.

Part Number: **A072H671** Part Revision: **B**

Part Name: **CONTROL,BATTERY CHARGER**

Drawing Category: **Detail** State: **Released**

# SECTION 4

## Generator Drawings and Interconnects

| | |
|---|---|
| SHEET 1 | -ISOMETRIC VIEWS<br>-SUBSYSTEMS LOCATION |
| SHEET 2 & 3 | -OVERALL DIMENSIONS WITHOUT FUEL TANK |
| SHEET 4 | -OVERALL DIMENSIONS WITH FUEL TANK (12HR & 24HR RUN TIME) |
| SHEET 5 | -LIFTING ARRANGEMENT FOR GENSET (WITHOUT FUEL TANK) |
| SHEET 6 | -GENSET WITHOUT FUEL TANK MASS, CG AND OVERALL DIMENSIONS TABLE. |
| SHEET 7 | -GENSET WITH 12HR FUEL TANK MASS, CG AND OVERALL DIMENSIONS TABLE. |
| SHEET 8 | -GENSET WITH 24HR FUEL TANK MASS, CG AND OVERALL DIMENSIONS TABLE. |

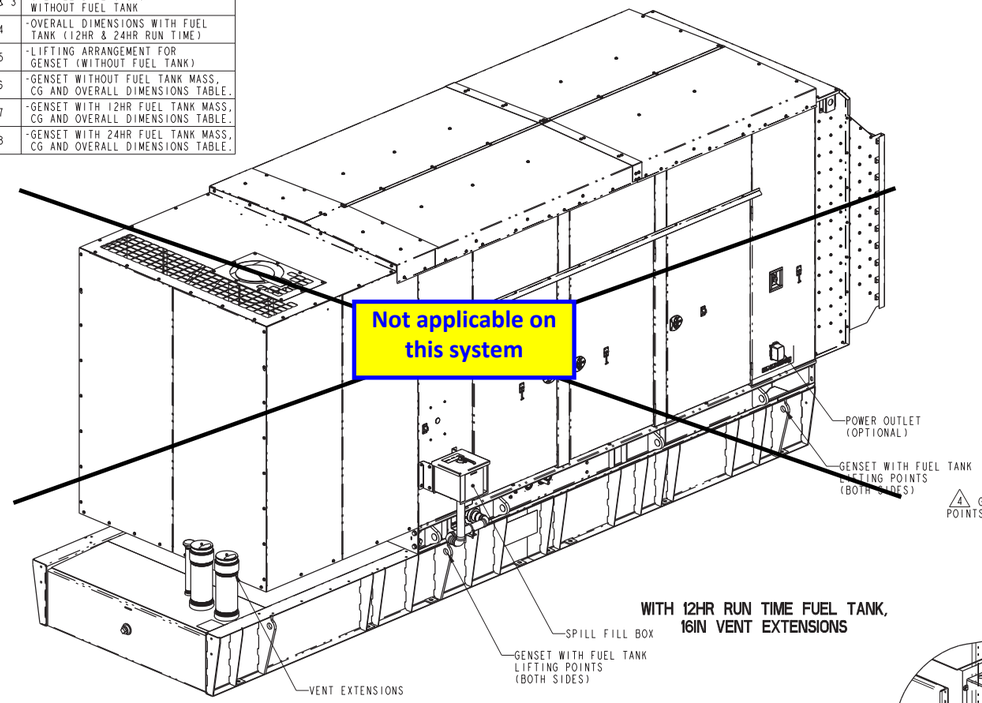


WITH 12HR RUN TIME FUEL TANK, 16IN VENT EXTENSIONS

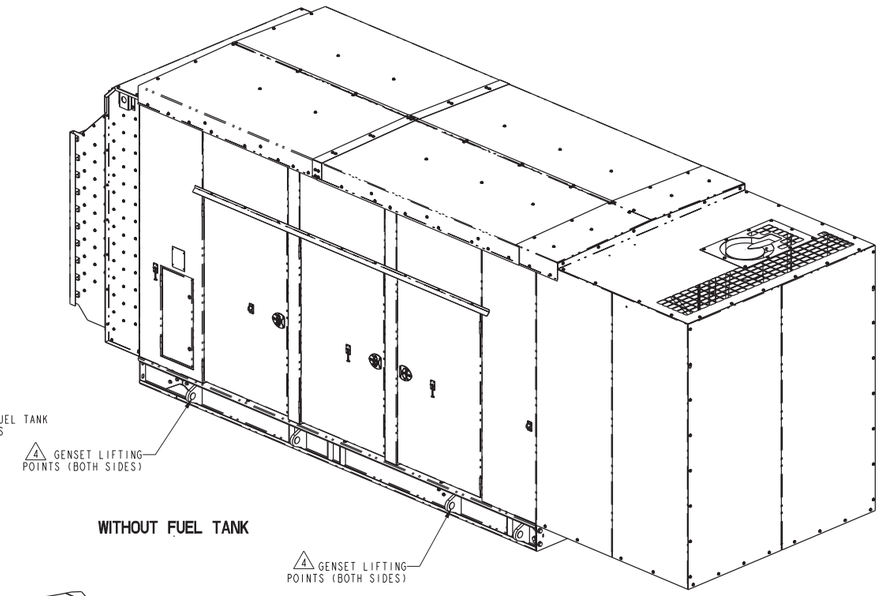


WITHOUT FUEL TANK

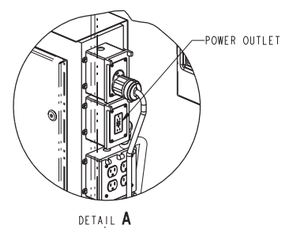


DETAIL A

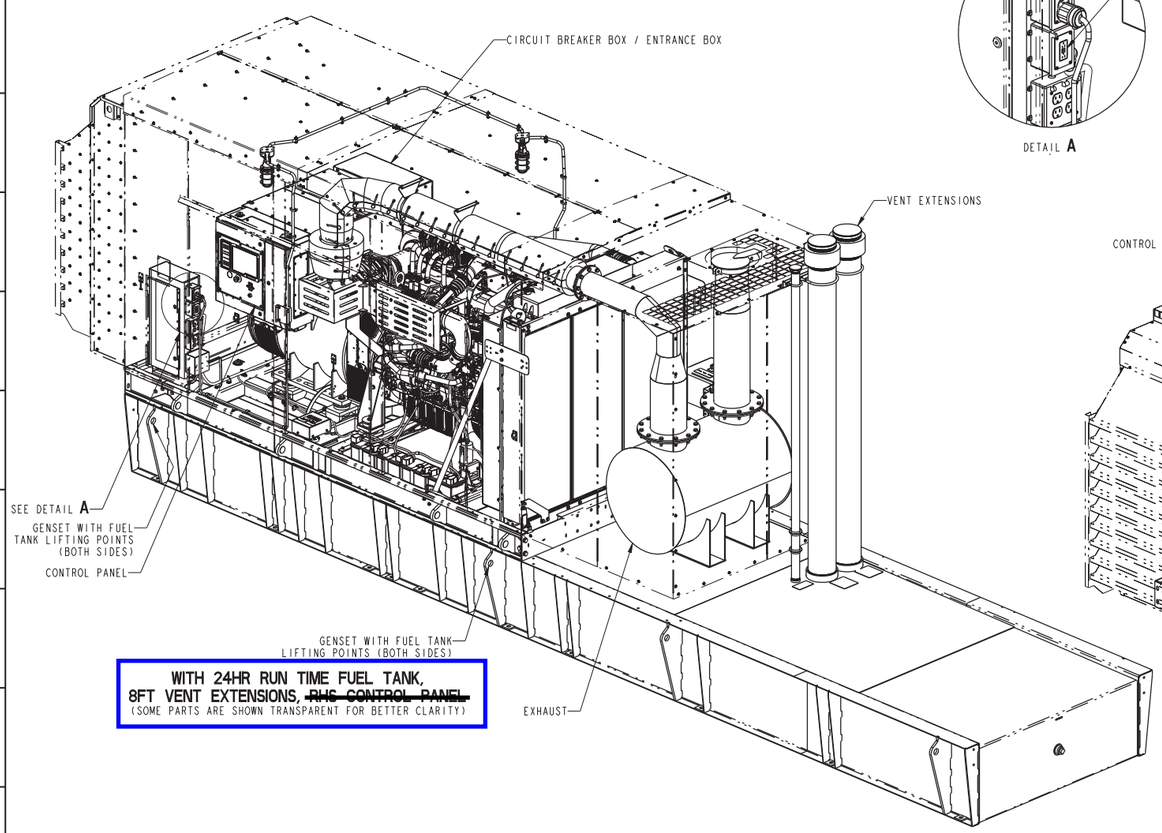


WITH 24HR RUN TIME FUEL TANK, 8FT VENT EXTENSIONS, ~~RHS CONTROL PANEL~~
(SOME PARTS ARE SHOWN TRANSPARENT FOR BETTER CLARITY)

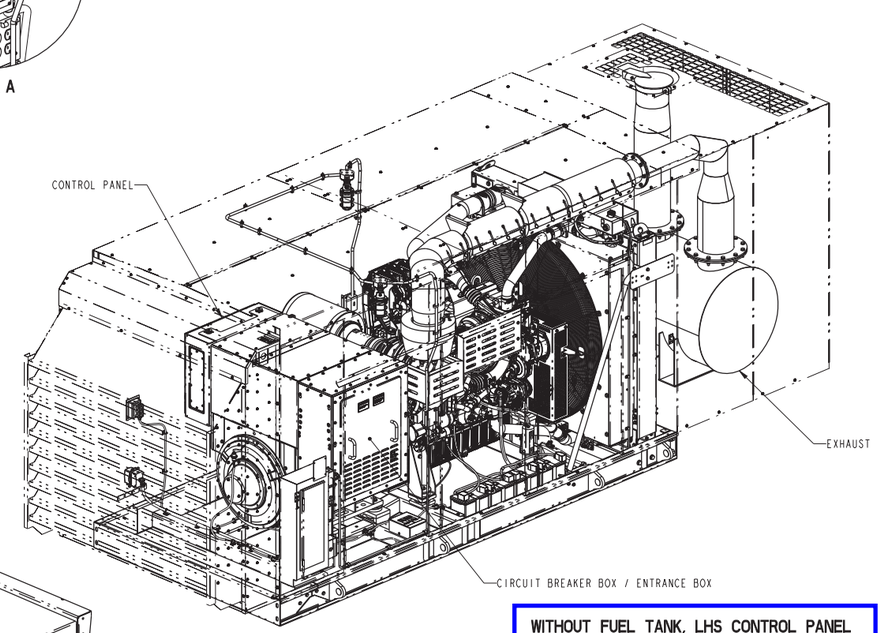


WITHOUT FUEL TANK, LHS CONTROL PANEL
(SOME PARTS ARE SHOWN TRANSPARENT FOR BETTER CLARITY)

NOTES:

1. ALL DIMENSIONS ARE REFERENCE, UNLESS SPECIFICALLY TOLERANCED.
2. ENCLOSURE OUTLINE WITH STANDARD SKID.
3. (NOTE REMOVED)
4. LIFTING POINT OF SKID TO BE USED FOR GENSET LIFTING.
5. AIR CLEANER IS NORMAL DUTY.
6. WEIGHT IS GIVEN WITHOUT CONSIDERING FUEL WEIGHT.
7. ENCLOSURE LIFTING POINTS NOT BE USED FOR GENSET LIFTING.
8. (NOTE REMOVED)
9. GENSET INSIDE ENCLOSURE SHOWN FOR REFERENCE ONLY WITH STANDARD OPTIONS.
10. FUEL TANK CAPACITY
    - 12 HR TANK:
      NOMINAL FUEL: 3478 LTR [919 US GALLONS] APPROX.
      USABLE FUEL : 3350 LTR [885 US GALLON] APPROX.
    - 24 HR TANK:
      NOMINAL FUEL: ~~7176 LTR~~ [1896 US GALLONS] APPROX.
      USABLE FUEL : ~~7000 LTR~~ [1770 US GALLON] APPROX.

NOTES CONTINUE ON SHEET NO. 4

| | | | |
|---|---|---|---|
| MODEL/PLATFORM: S17 | | THIS PART IS SIMILAR TO: - | |
| UNLESS OTHERWISE SPECIFIED THE FOLLOWING SHALL APPLY | | | ANG. TOL.: ± 1° |
| DIMENSIONAL TOLERANCES: | X ± 1 | .X ± 0.8 | .XX ± 0.38 |
| HOLE SIZE 0.00-4.99 TOL. +0.15/-0.08 | HOLE SIZE 5.00-9.99 TOL. +0.20/-0.10 | HOLE SIZE 10.00-17.49 TOL. +0.25/-0.13 | HOLE SIZE 17.50-24.99 TOL. +0.30/-0.13 |

| | |
|---|---|
| PART NUMBER: A074R018 | PART REVISION: F |
| PART NAME: OUTLINE,GENSET | |
| DRAWING CATEGORY: OUTLINE | |
| STATE: RELEASED | SHEET: 1 OF 14 |
| CUMMINS DATA CLASSIFICATION: CUMMINS CONFIDENTIAL | |

THIS DOCUMENT (AND THE INFORMATION SHOWN THEREON) IS CONFIDENTIAL AND PROPRIETARY AND SHALL NOT BE DISCLOSED TO OTHERS IN HARD COPY OR ELECTRONIC FORM. REPRODUCED BY ANY MEANS, OR USED FOR ANY PURPOSE WITHOUT WRITTEN CONSENT OF CUMMINS INC.

Cummins Inc.

DIMENSIONS ARE IN: MILLIMETERS
[ ] ARE IN: INCHES
SIZE: A0 SCALE:NTS
DIMENSIONING AND TOLERANCING PER: ASME Y14.5-2009
THIRD ANGLE PROJECTION
CAD SYSTEM PTC® Creo® Parametric

OVERALL DIMENSIONS WITHOUT FUEL TANK

NOTE: THE CONTROL WILL BE MOUNTED ON THE LEFT SIDE.

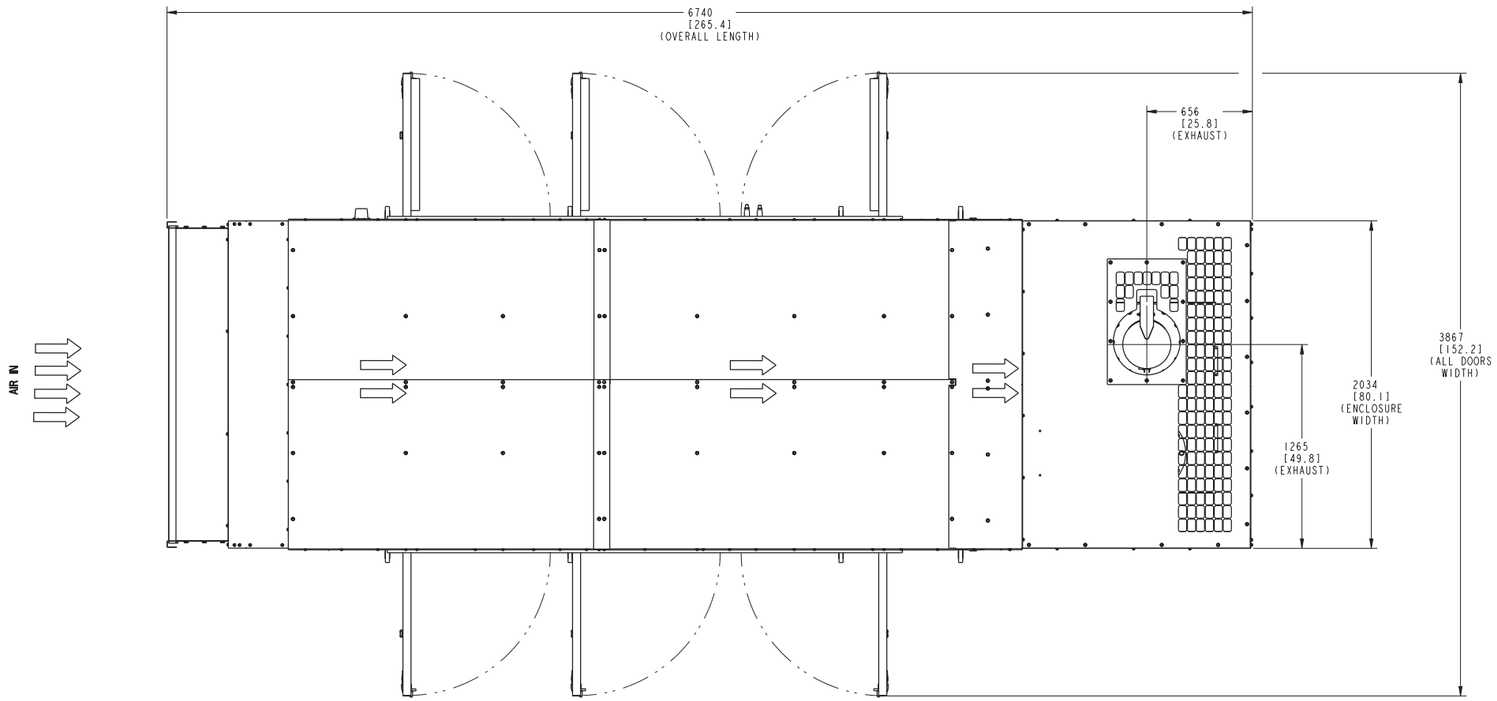


**TOP VIEW**
(ENCLOSURE DOORS OPEN)

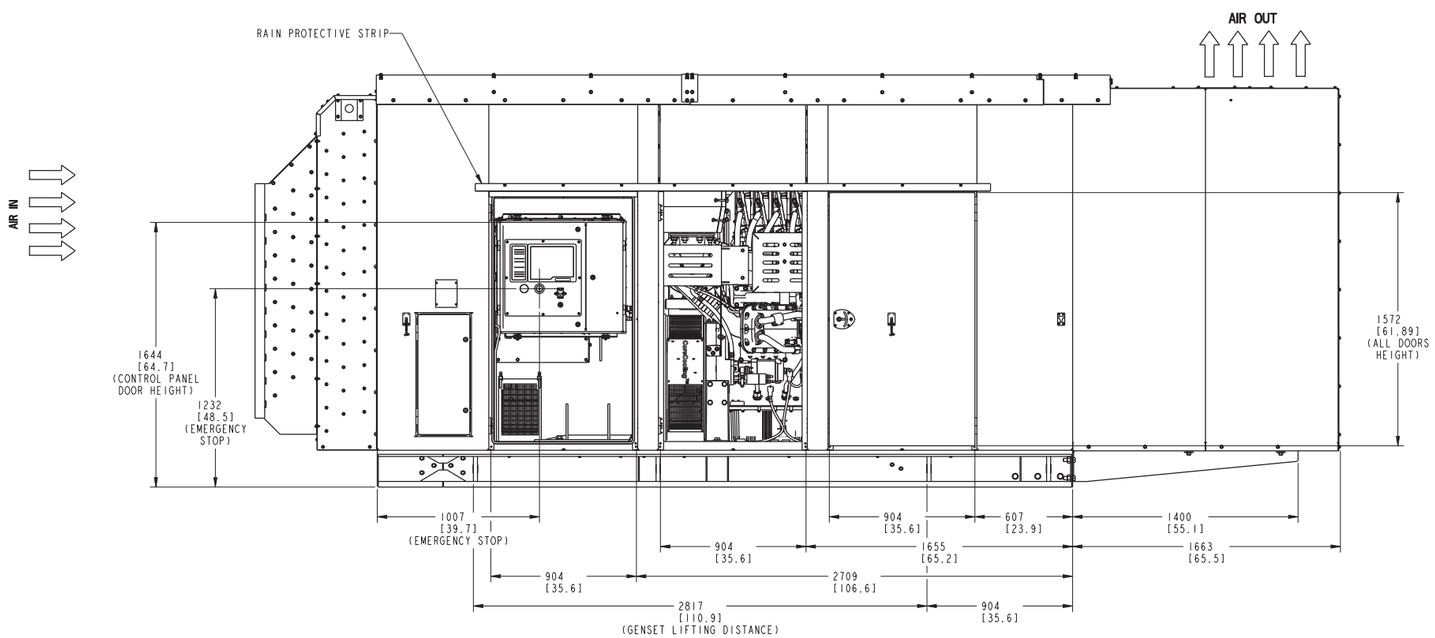


**RHS CONTROL PANEL**
(SOME PARTS ARE HIDDEN FOR BETTER CLARITY)

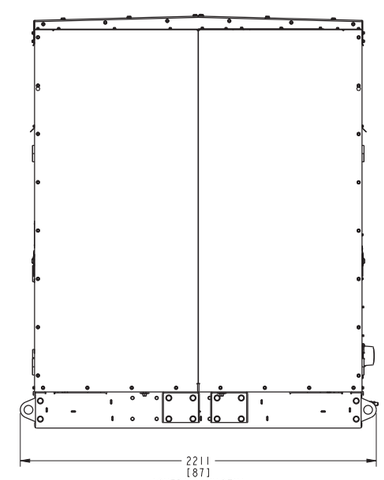


| | |
|---|---|
| MODEL/PLATFORM: S17 | THIS PART IS SIMILAR TO: - |
| UNLESS OTHERWISE SPECIFIED THE FOLLOWING SHALL APPLY | ANG. TOL.: ± 1° |
| DIMENSIONAL TOLERANCES: X ± 1 / .X ± 0.8 / .XX ± 0.38 | |
| HOLE SIZE 0.00-4.99 TOL. +0.15/-0.08 / HOLE SIZE 5.00-9.99 TOL. +0.20/-0.10 / HOLE SIZE 10.00-17.49 TOL. +0.25/-0.13 / HOLE SIZE 17.50-24.99 TOL. +0.30/-0.13 | |

| | |
|---|---|
| PART NUMBER: A074R018 | PART REVISION: F |
| PART NAME: OUTLINE,GENSET | |
| DRAWING CATEGORY: OUTLINE | |
| STATE: RELEASED | SHEET: 2 OF 14 |

CUMMINS DATA CLASSIFICATION: CUMMINS CONFIDENTIAL
THIS DOCUMENT (AND THE INFORMATION SHOWN THEREON) IS CONFIDENTIAL AND PROPRIETARY AND SHALL NOT BE DISCLOSED TO OTHERS IN HARD COPY OR ELECTRONIC FORM, REPRODUCED BY ANY MEANS, OR USED FOR ANY PURPOSE WITHOUT WRITTEN CONSENT OF CUMMINS INC.

Cummins Inc.

DIMENSIONS ARE IN: MILLIMETERS
[ ] ARE IN: INCHES
SIZE: A0 SCALE:NTS
DIMENSIONING AND TOLERANCING PER: ASME Y14.5-2009
THIRD ANGLE PROJECTION
CAD SYSTEM PTC® Creo® Parametric

OVERALL DIMENSIONS WITH FUEL TANK (12HR & 24HR RUN TIME)

NOTE: THE CONTROL WILL BE MOUNTED ON THE LEFT SIDE. THE CIRCUIT BREAKER WILL BE MOUNTED ON THE RIGHT SIDE.

NOTES:

11. FOR HORIZONTAL DIMENSIONS FROM CHASSIS EDGE REFER SHEET NO. 2

12. MALE ADAPTER WITH 2" NPT FEMALE THREAD AND DUST CAP.

SCULLY P/N - ADAPTER 065-002
- DUST CAP 065-1202

SCULLY SIGNAL CO
70 INDUSTRIAL WAY
WILMINGTON, MA
01887

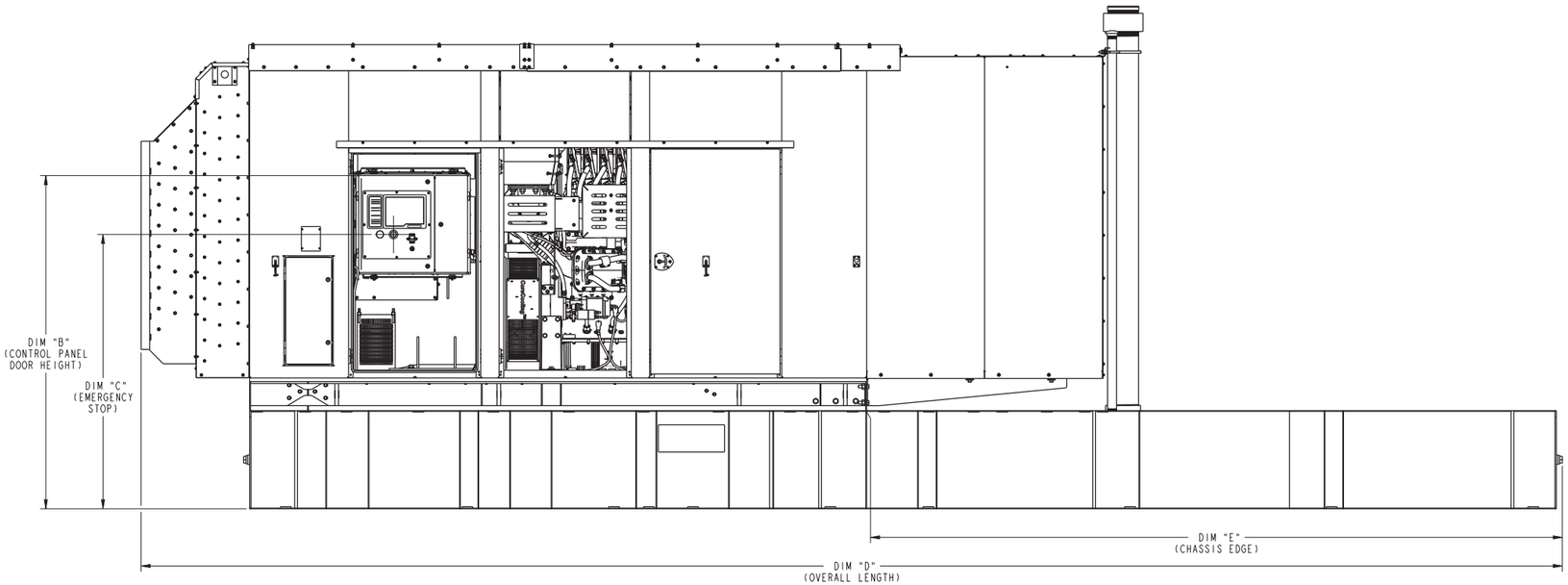


RHS CONTROL PANEL WITH FUEL TANK (24HR RUN TIME)
(SOME PARTS ARE HIDDEN FOR BETTER CLARITY)

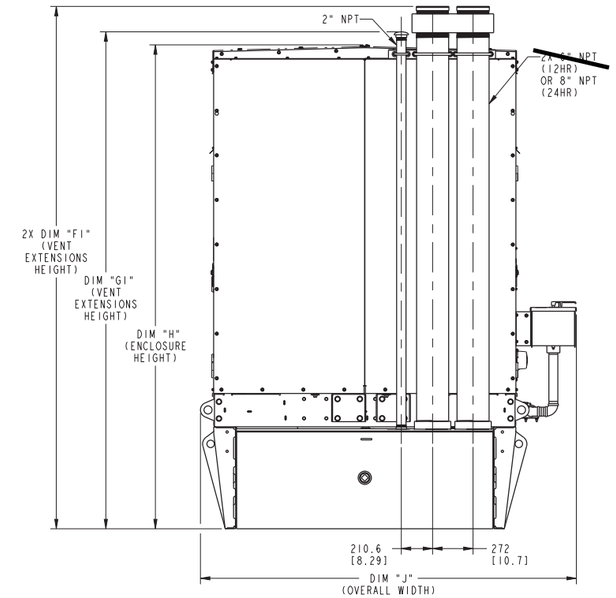


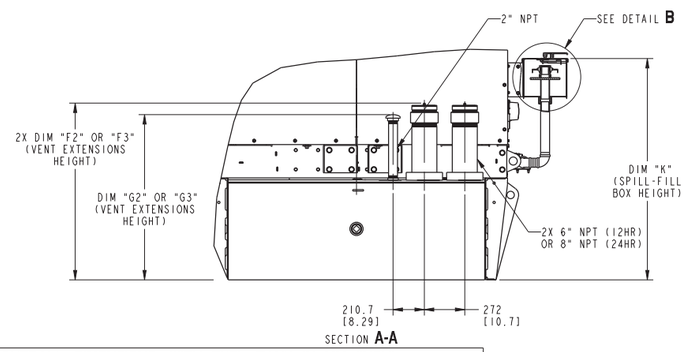


SECTION A-A

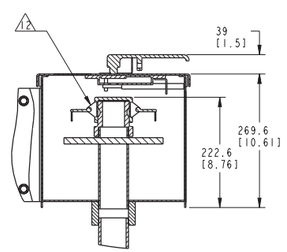


DETAIL B

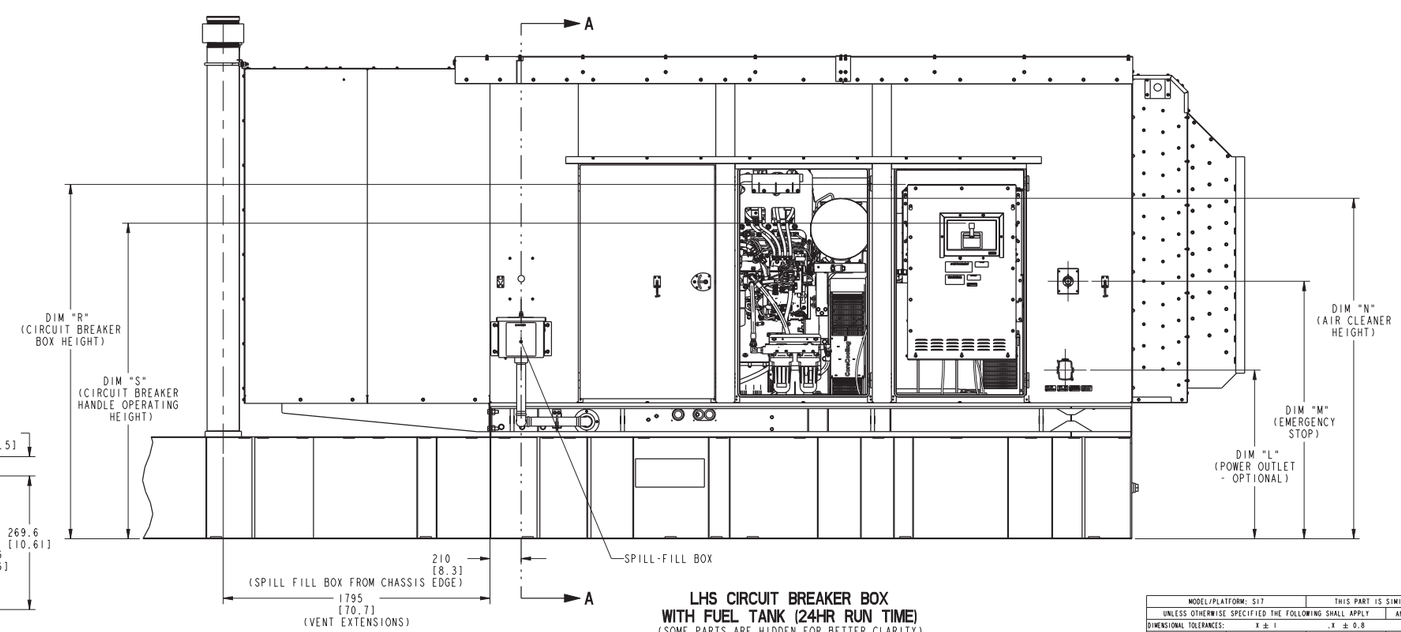


LHS CIRCUIT BREAKER BOX
WITH FUEL TANK (24HR RUN TIME)
(SOME PARTS ARE HIDDEN FOR BETTER CLARITY)

## OVERALL DIMENSIONS, WITH FUEL TANK IN MM [INCH]

| FUEL TANK RUN TIME (SEE NOTE 10 ON SHEET 1 FOR FUEL TANK CAPACITY) | | 12 HOUR | 24 HOUR |
|---|---|---|---|
| DIM "B" (CONTROL PANEL DOOR HEIGHT) | | 2164 [85.2] | 2329 [91.69] |
| DIM "C" (EMERGENCY STOP) | | 1753 [69.02] | 1918 [75.51] |
| DIM "D" (OVERALL LENGTH) | | REFER SHEET 7 | REFER SHEET 8 |
| DIM "E" (CHASSIS EDGE) | | 2197 [86.5] | 4868 [191.65] |
| DIM "F1" (VENT EXTENSIONS HEIGHT) | | 3349 [131.85] | 3514 [138.35] |
| DIM "F2" (VENT EXTENSIONS HEIGHT) | | 1024 [40.31] | 1189 [46.81] |
| DIM "F3" (VENT EXTENSIONS HEIGHT) | | 872 [34.33] | 1037 [40.83] |
| DIM "G1" (VENT EXTENSIONS HEIGHT) | | 3178 [125.12] | 3343 [131.61] |
| DIM "G2" (VENT EXTENSIONS HEIGHT) | | 946 [37.36] | 1111 [43.74] |
| DIM "G3" (VENT EXTENSIONS HEIGHT) | | 794 [31.26] | 959 [37.76] |
| DIM "H" (ENCLOSURE HEIGHT) | | 3090 [121.65] | 3255 [128.15] |
| DIM "J" (OVERALL WIDTH) | | REFER SHEET 7 | REFER SHEET 8 |
| DIM "K" (SPILL-FILL BOX HEIGHT) | | 1326 [52.2] | 1489 [58.62] |
| DIM "L" (POWER OUTLET - OPTIONAL) | | 969 [38.15] | 1134 [44.65] |
| DIM "M" (EMERGENCY STOP) | | 1567 [61.69] | 1732 [68.19] |
| DIM "N" (AIR CLEANER HEIGHT) | | 2125 [83.66] | 2290 [90.2] |
| DIM "P" (ENTRANCE BOX) | | 2191 [86.26] | 2357 [92.8] |
| DIM "R" (CIRCUIT BREAKER BOX HEIGHT) | ~~DUAL CB BOX : UP TO 1200A CB'S~~ | 2185.48 [86.04] | ~~2350.58 [92.54]~~ |
| | SINGLE CB BOX : UP TO 1200A CB'S | 2218.24 [87.33] | 2383.34 [93.83] |
| DIM "S" (CIRCUIT BREAKER HANDLE OPERATING HEIGHT) | ~~DUAL CB BOX : UP TO 1200A CB'S~~ | 1698.55 [66.87] | ~~1863.55 [73.36]~~ |
| | SINGLE CB BOX : UP TO 1200A CB'S | 1761.86 [69.36] | 1990.66 [78.37] |
| | ~~SINGLE CB BOX : 1600 TO 2500A CB'S~~ | 1894.04 [74.59] | ~~2123.84 [83.63]~~ |

| | | | |
|---|---|---|---|
| MODEL/PLATFORM: S17 | | THIS PART IS SIMILAR TO: - | |
| UNLESS OTHERWISE SPECIFIED THE FOLLOWING SHALL APPLY | | | ANG. TOL.: ± 1° |
| DIMENSIONAL TOLERANCES: | X ± 1 | .X ± 0.8 | .XX ± 0.38 |
| HOLE SIZE 0.00-4.99 TOL. +0.15/-0.08 | HOLE SIZE 5.00-9.99 TOL. +0.20/-0.10 | HOLE SIZE 10.00-17.49 TOL. +0.25/-0.13 | HOLE SIZE 17.50-24.99 TOL. +0.30/-0.13 |

| | |
|---|---|
| PART NUMBER: A074R018 | PART REVISION: F |
| PART NAME: OUTLINE,GENSET | |
| DRAWING CATEGORY: OUTLINE | |
| STATE: RELEASED | SHEET: 4 OF 14 |

CUMMINS DATA CLASSIFICATION: CUMMINS CONFIDENTIAL

THIS DOCUMENT (AND THE INFORMATION SHOWN THEREON) IS CONFIDENTIAL AND PROPRIETARY AND SHALL NOT BE DISCLOSED TO OTHERS IN HARD COPY OR ELECTRONIC FORM, REPRODUCED BY ANY MEANS, OR USED FOR ANY PURPOSE WITHOUT WRITTEN CONSENT OF CUMMINS INC.

Cummins Inc.

DIMENSIONS ARE IN: MILLIMETERS
[ ] ARE IN: INCHES

SIZE: AO SCALE:NTS

DIMENSIONING AND TOLERANCING PER: ASME Y14.5-2009

THIRD ANGLE PROJECTION

CAD SYSTEM PTC® Creo® Parametric

OVERALL DIMENSIONS WITH FUEL TANK

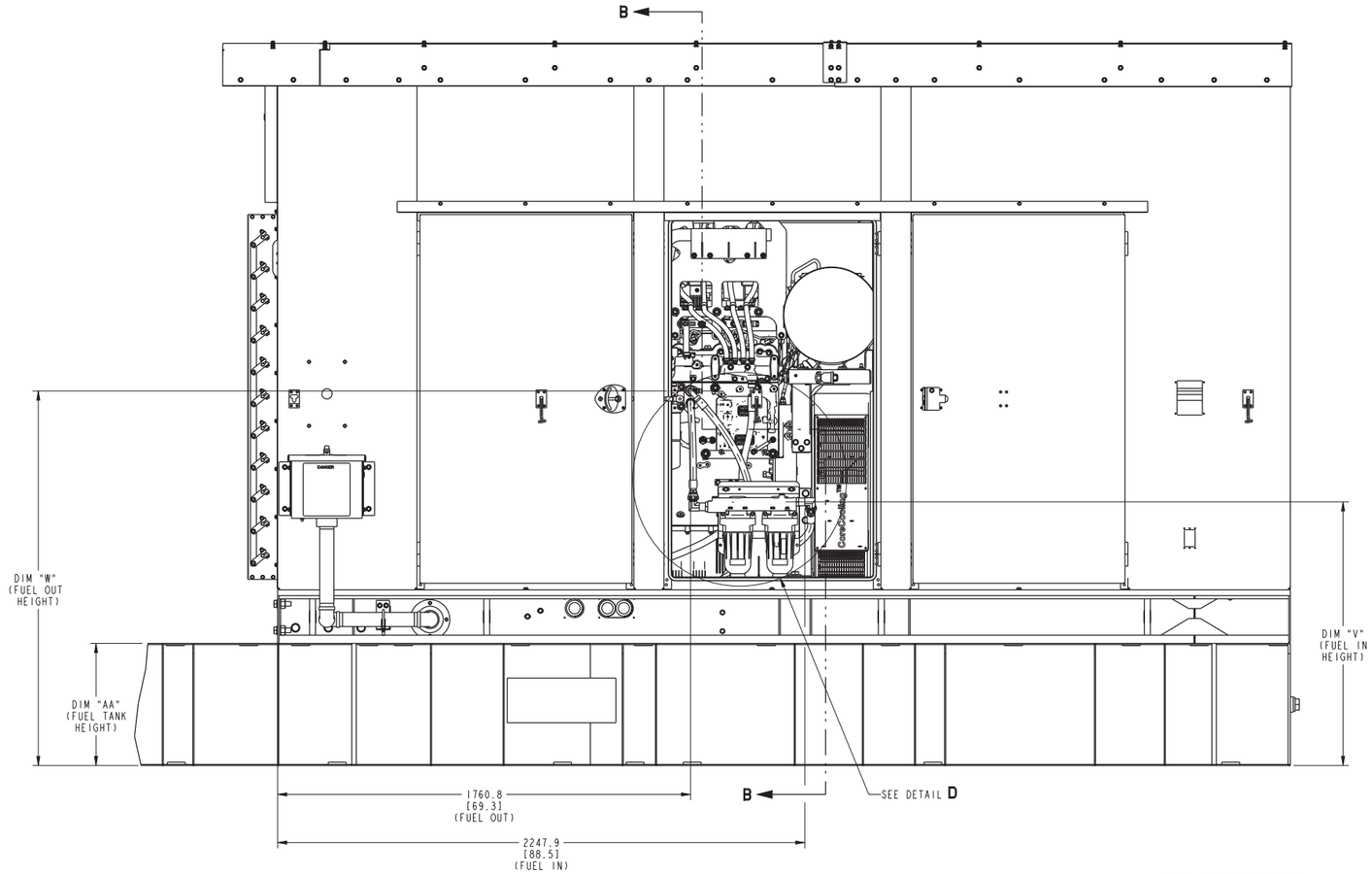


**FUEL SYSTEM VIEW**
(SOME PARTS ARE HIDDEN FOR BETTER CLARITY)
SCALE 39/320

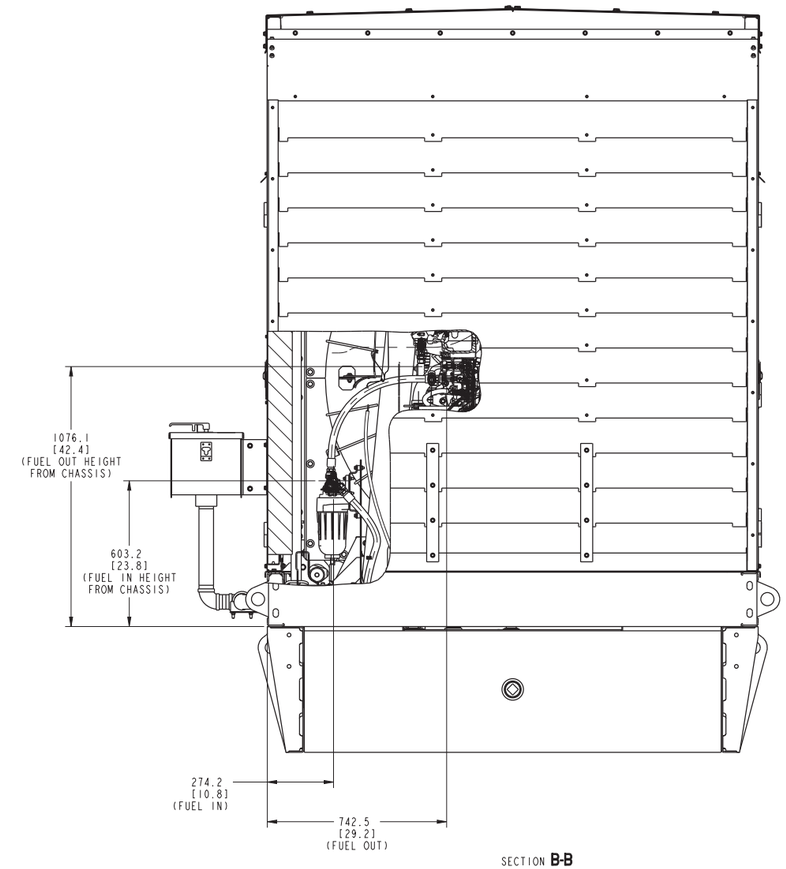


SECTION **B-B**

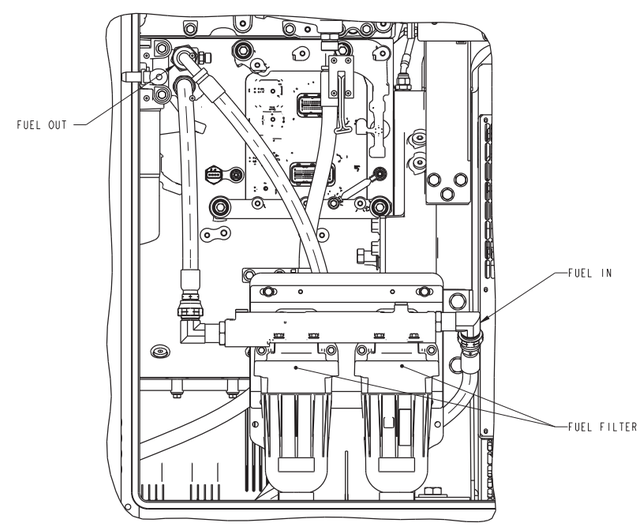


**FUEL SYSTEM VIEW**
DETAIL **D**
SCALE 9/32

**FUEL SYSTEM DIMENSIONS, WITH FUEL TANK IN MM [INCH]**

| SR. NO. | FUEL TANK RUN TIME (SEE NOTE 10 ON SHEET 1 FOR FUEL TANK CAPACITY) | 12 HOUR | 24 HOUR |
|---|---|---|---|
| 1 | DIM "V" (FUEL IN HEIGHT) | 1124 [44.3] | 1289 [50.7] |
| 2 | DIM "W" (FUEL OUT HEIGHT) | 1597 [62.8] | 1762 [69.3] |
| 3 | DIM "AA" (FUEL TANK HEIGHT) | 457.2 [18.0] | 686 [27.0] |

| | |
|---|---|
| PART NUMBER: A074R018 | PART REVISION: F |
| PART NAME: OUTLINE,GENSET | |
| DRAWING CATEGORY: OUTLINE | |
| STATE: RELEASED | SHEET: 5 OF 14 |
| CUMMINS DATA CLASSIFICATION: CUMMINS CONFIDENTIAL | |

THIS DOCUMENT (AND THE INFORMATION SHOWN THEREON) IS CONFIDENTIAL AND PROPRIETARY AND SHALL NOT BE DISCLOSED TO OTHERS IN HARD COPY OR ELECTRONIC FORM, REPRODUCED BY ANY MEANS, OR USED FOR ANY PURPOSE WITHOUT WRITTEN CONSENT OF CUMMINS INC.

| | |
|---|---|
| MODEL/PLATFORM: S17 | THIS PART IS SIMILAR TO: - |
| UNLESS OTHERWISE SPECIFIED THE FOLLOWING SHALL APPLY | ANG. TOL.: ± 1° |
| DIMENSIONAL TOLERANCES: X ± 1 | .X ± 0.0 / .XX ± 0.30 |
| HOLE SIZE 0.00-4.99 TOL. +0.15/-0.08 / HOLE SIZE 5.00-9.99 TOL. +0.20/-0.10 | HOLE SIZE 10.00-17.49 TOL. +0.25/-0.13 / HOLE SIZE 17.50-24.99 TOL. +0.30/-0.13 |

Cummins Inc.

DIMENSIONS ARE IN: MILLIMETERS
[ ] ARE IN: INCHES

SIZE: A0 SCALE:NTS

DIMENSIONING AND TOLERANCING PER: ASME Y14.5-2009

THIRD ANGLE PROJECTION

CAD SYSTEM PTC® Creo® Parametric

LIFTING ARRANGEMENT FOR GENSET (WITHOUT FUEL TANK)

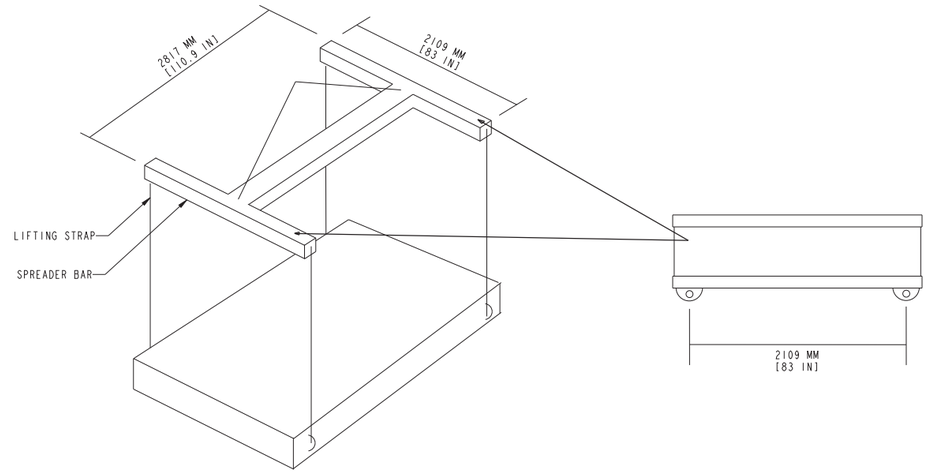


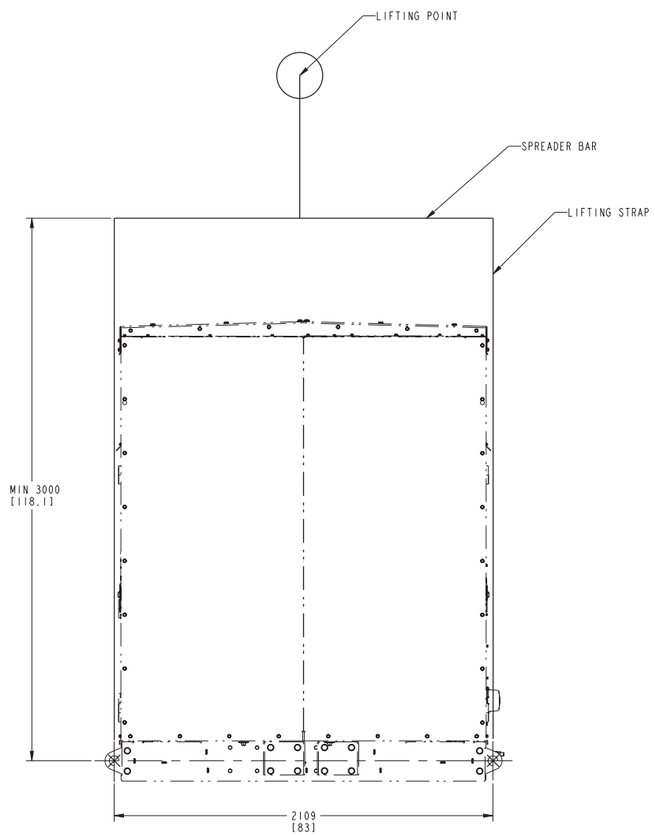


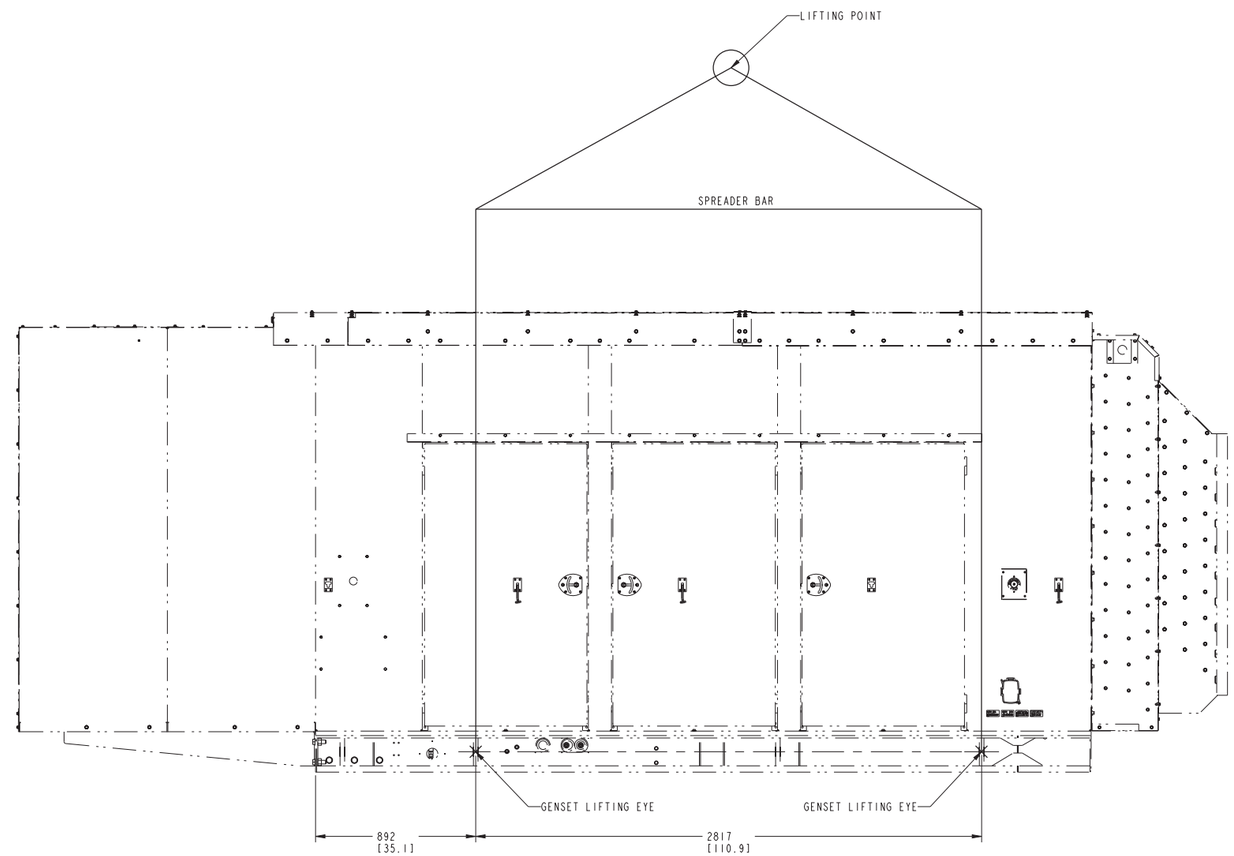


| | |
|---|---|
| MODEL/PLATFORM: S17 | THIS PART IS SIMILAR TO: - |
| UNLESS OTHERWISE SPECIFIED THE FOLLOWING SHALL APPLY | ANG. TOL.: ± 1° |
| DIMENSIONAL TOLERANCES: X ± 1 | .X ± 0.0 .XX ± 0.38 |
| HOLE SIZE 0.00-4.99 TOL. +0.15/-0.08 | HOLE SIZE 5.00-9.99 TOL. +0.20/-0.10 |
| HOLE SIZE 10.00-17.49 TOL. +0.25/-0.13 | HOLE SIZE 17.50-24.99 TOL. +0.30/-0.13 |

| | |
|---|---|
| PART NUMBER: A074R018 | PART REVISION: F |
| PART NAME: OUTLINE,GENSET | |
| DRAWING CATEGORY: OUTLINE | |
| STATE: RELEASED | SHEET: 6 OF 14 |
| CUMMINS DATA CLASSIFICATION: CUMMINS CONFIDENTIAL | |

THIS DOCUMENT (AND THE INFORMATION SHOWN THEREON) IS CONFIDENTIAL AND PROPRIETARY AND SHALL NOT BE DISCLOSED TO OTHERS IN HARD COPY OR ELECTRONIC FORM, REPRODUCED BY ANY MEANS, OR USED FOR ANY PURPOSE WITHOUT WRITTEN CONSENT OF CUMMINS INC.

Cummins Inc.

DIMENSIONS ARE IN: MILLIMETERS
[ ] ARE IN: INCHES

SIZE: A0 SCALE:NTS

DIMENSIONING AND TOLERANCING PER: ASME Y14.5-2009

THIRD ANGLE PROJECTION

CAD SYSTEM PTC® Creo® Parametric

## TABLE FOR GENSET MASS, C OF G AND OVERALL DIMENSIONS - WITH 24 HR FUEL TANK

| NODES | ENGINE | CHASSIS | ENCLOSURE TYPE | ALTERNATOR TYPE (S6) | CONTROL PANEL | AIR CLEANER | CIRCUIT BREAKER BOX (CB) / ENTRANCE BOX (EB) | GENSET WET WEIGHT (KG) | GENSET DRY WEIGHT (KG) | OVERALL DIMENSIONS (REFER SHEET 2 AND 3) LENGTH | WIDTH | HEIGHT 8FT VENT EXTENSION | HEIGHT OTHER VENT EXTENSION | C OF G A | B | C |
|---|---|---|---|---|---|---|---|---|---|---|---|---|---|---|---|---|
| C600D6E, C750D6E, C800D6E, C900D6E, C1000D6ED | S17 | 24 HR FUEL TANK | STEEL SOUND LEVEL 1 (STD) | SLID-C4, SLID-D4 | LHS | NORMAL DUTY | 1 CB RHS | 11338.61 [24997.32] | 11010.61 [24274.21] | 9945 [391.54] DIM "D" | 2529 [99.57] DIM "J" | 3514 [138.35] DIM "F1" | 3255 [128.15] DIM "H" | 1005.32 [39.57] | 651.69 [25.65] | 1346.87 [53.02] |
| | | | | | RHS | | 1 CB LHS | 11338.61 [24997.32] | 11010.61 [24274.21] | | | | | 1001.63 [39.43] | 651.69 [25.65] | 1345.06 [52.95] |
| | | | | SLID-E4, SLID-F4 | LHS | | 1 CB RHS | 11738 [25877.82] | 11410 [25154.71] | | | | | 1006.37 [39.62] | 650.93 [25.62] | 1420.73 [55.93] |
| | | | | | RHS | | 1 CB LHS | 11738 [25877.82] | 11410 [25154.71] | | | | | 1002.80 [39.48] | 650.93 [25.62] | 1418.97 [55.86] |
| | | | | SLID-C4, SLID-D4 | LHS | | 2 CB RHS | 11344.58 [25010.48] | 11016.58 [24287.37] | | | | | 1006.07 [39.60] | 651.54 [25.65] | 1346.25 [53.00] |
| | | | | | RHS | | 2 CB LHS | 11344.58 [25010.48] | 11016.58 [24287.37] | | | | | 1000.90 [39.40] | 651.54 [25.65] | 1346.56 [53.01] |
| | | | | SLID-E4, SLID-F4 | LHS | | 2 CB RHS | 11743.97 [25890.99] | 11415.97 [25167.87] | | | | | 1007.09 [39.64] | 650.79 [25.62] | 1420.09 [55.90] |
| | | | | | RHS | | 2 CB LHS | 11743.97 [25890.99] | 11415.97 [25167.87] | | | | | 1002.09 [39.45] | 650.79 [25.62] | 1420.39 [55.92] |
| | | | | SLID-C4, SLID-D4 | LHS | | IEB (R) BOTTOM | 11367.18 [25060.31] | 11039.18 [24337.19] | | | | | 1006.75 [39.63] | 653.85 [25.74] | 1348.60 [53.09] |
| | | | | | RHS | | IEB (L) BOTTOM | 11337.16 [24994.12] | 11009.16 [24271.01] | | | | | 1001.34 [39.42] | 651.91 [25.66] | 1344.30 [52.92] |
| | | | | SLID-E4, SLID-F4 | LHS | | IEB (R) BOTTOM | 11766.57 [25940.81] | 11438.57 [25217.7] | | | | | 1007.75 [39.67] | 653.02 [25.70] | 1422.22 [55.99] |
| | | | | | RHS | | IEB (L) BOTTOM | 11736.55 [25874.63] | 11408.55 [25151.51] | | | | | 1002.52 [39.46] | 651.14 [25.63] | 1418.25 [55.83] |
| C600D6E, C750D6E, C800D6E, C900D6E, C1000D6ED | S17 | 24 HR FUEL TANK | STEEL SOUND LEVEL 1 (WIND RATED) | SLID-C4, SLID-D4 | LHS | NORMAL DUTY | 1 CB RHS | 11397.61 [25127.39] | 11069.61 [24404.28] | | | | | 990.01 [38.97] | 1747.54 [68.80] | 2072.23 [81.58] |
| | | | | | RHS | | 1 CB LHS | 11397.61 [25127.39] | 11069.61 [24404.28] | | | | | 990.01 [38.97] | 1747.54 [68.80] | 2072.23 [81.58] |
| | | | | SLID-E4, SLID-F4 | LHS | | 1 CB RHS | 11797 [26007.9] | 11469 [25284.78] | | | | | 990.01 [38.97] | 1747.54 [68.80] | 2072.23 [81.58] |
| | | | | | RHS | | 1 CB LHS | 11797 [26007.9] | 11469 [25284.78] | | | | | 990.01 [38.97] | 1747.54 [68.80] | 2072.23 [81.58] |
| | | | | SLID-C4, SLID-D4 | LHS | | 2 CB RHS | 11403.58 [25140.56] | 11075.58 [24417.44] | | | | | 990.01 [38.97] | 1747.54 [68.80] | 2072.23 [81.58] |
| | | | | | RHS | | 2 CB LHS | 11403.58 [25140.56] | 11075.58 [24417.44] | | | | | 990.01 [38.97] | 1747.54 [68.80] | 2072.23 [81.58] |
| | | | | SLID-E4, SLID-F4 | LHS | | 2 CB RHS | 11802.97 [26021.06] | 11474.97 [25297.94] | | | | | 990.01 [38.97] | 1747.54 [68.80] | 2072.23 [81.58] |
| | | | | | RHS | | 2 CB LHS | 11802.97 [26021.06] | 11474.97 [25297.94] | | | | | 990.01 [38.97] | 1747.54 [68.80] | 2072.23 [81.58] |
| | | | | SLID-C4, SLID-D4 | LHS | | IEB (R) BOTTOM | 11426.18 [25190.38] | 11098.18 [24467.26] | | | | | 990.01 [38.97] | 1747.54 [68.80] | 2072.23 [81.58] |
| | | | | | RHS | | IEB (L) BOTTOM | 11396.16 [25124.2] | 11068.16 [24401.08] | | | | | 990.01 [38.97] | 1747.54 [68.80] | 2072.23 [81.58] |
| | | | | SLID-E4, SLID-F4 | LHS | | IEB (R) BOTTOM | 11825.57 [26070.88] | 11497.57 [25347.77] | | | | | 990.01 [38.97] | 1747.54 [68.80] | 2072.23 [81.58] |
| | | | | | RHS | | IEB (L) BOTTOM | 11795.55 [26004.7] | 11467.55 [25281.59] | | | | | 990.01 [38.97] | 1747.54 [68.80] | 2072.23 [81.58] |
| C600D6E, C750D6E, C800D6E, C900D6E, C1000D6ED | S17 | 24 HR FUEL TANK | STEEL SOUND LEVEL 2 (STD) | SLID-E4, SLID-F4 | LHS | NORMAL DUTY | 1 CB RHS | 11749.34 [25902.82] | 11421.34 [25179.71] | | | | | 1005.59 [39.59] | 651.62 [25.65] | 1418.44 [55.84] |
| | | | | | RHS | | 1 CB LHS | 11749.34 [25902.82] | 11421.34 [25179.71] | | | | | 1002.02 [39.44] | 651.62 [25.65] | 1416.69 [55.77] |
| | | | | SLID-C4, SLID-D4 | LHS | | 1 CB RHS | 11349.95 [25022.32] | 11021.95 [24299.21] | | | | | 1004.52 [39.54] | 652.40 [25.68] | 1344.58 [52.93] |
| | | | | | RHS | | 1 CB LHS | 11349.95 [25022.32] | 11021.95 [24299.21] | | | | | 1000.83 [39.40] | 652.40 [25.68] | 1342.76 [52.86] |
| | | | | SLID-E4, SLID-F4 | LHS | | 2 CB RHS | 11755.32 [25916.01] | 11427.32 [25192.89] | | | | | 1006.31 [39.61] | 651.48 [25.64] | 1417.80 [55.81] |
| | | | | | RHS | | 2 CB LHS | 11755.32 [25916.01] | 11427.32 [25192.89] | | | | | 1001.32 [39.42] | 651.48 [25.64] | 1418.10 [55.83] |
| | | | | SLID-C4, SLID-D4 | LHS | | 2 CB RHS | 11355.92 [25035.48] | 11027.92 [24312.37] | | | | | 1005.26 [39.57] | 652.26 [25.67] | 1343.96 [52.91] |
| | | | | | RHS | | 2 CB LHS | 11355.92 [25035.48] | 11027.92 [24312.37] | | | | | 1000.10 [39.37] | 652.26 [25.67] | 1344.26 [52.92] |
| | | | | SLID-E4, SLID-F4 | LHS | | IEB (R) BOTTOM | 11777.92 [25965.83] | 11449.92 [25242.72] | | | | | 1006.97 [39.64] | 653.70 [25.73] | 1419.93 [55.90] |
| | | | | | RHS | | IEB (L) BOTTOM | 11747.9 [25899.65] | 11419.9 [25176.53] | | | | | 1001.74 [39.43] | 651.83 [25.66] | 1415.97 [55.74] |
| | | | | SLID-C4, SLID-D4 | LHS | | IEB (R) BOTTOM | 11378.53 [25085.33] | 11050.53 [24362.21] | | | | | 1005.95 [39.60] | 654.56 [25.77] | 1346.30 [53.00] |
| | | | | | RHS | | IEB (L) BOTTOM | 11348.5 [25019.13] | 11020.5 [24296.01] | | | | | 1000.54 [39.39] | 652.63 [25.69] | 1342.01 [52.83] |
| C600D6E, C750D6E, C800D6E, C900D6E, C1000D6ED | S17 | 24 HR FUEL TANK | STEEL SOUND LEVEL 2 (WIND RATED) | SLID-C4, SLID-D4 | LHS | NORMAL DUTY | 1 CB RHS | 11455.61 [25255.26] | 11127.61 [24532.15] | | | | | 1005.41 [39.58] | 652.81 [25.70] | 1337.57 [52.66] |
| | | | | | RHS | | 1 CB LHS | 11455.61 [25255.26] | 11127.61 [24532.15] | | | | | 1001.76 [39.43] | 652.81 [25.70] | 1335.77 [52.58] |
| | | | | SLID-E4, SLID-F4 | LHS | | 1 CB RHS | 11855 [26135.77] | 11527 [25412.65] | | | | | 1006.44 [39.62] | 652.02 [25.67] | 1411.01 [55.55] |
| | | | | | RHS | | 1 CB LHS | 11855 [26135.77] | 11527 [25412.65] | | | | | 1002.91 [39.48] | 652.02 [25.67] | 1409.27 [55.48] |
| | | | | SLID-C4, SLID-D4 | LHS | | 2 CB RHS | 11461.59 [25268.45] | 11133.59 [24545.33] | | | | | 1006.15 [39.61] | 652.67 [25.69] | 1336.96 [52.63] |
| | | | | | RHS | | 2 CB LHS | 11461.59 [25268.45] | 11133.59 [24545.33] | | | | | 1001.03 [39.41] | 652.67 [25.69] | 1337.26 [52.64] |
| | | | | SLID-E4, SLID-F4 | LHS | | 2 CB RHS | 11860.98 [26148.95] | 11532.98 [25425.83] | | | | | 1007.15 [39.65] | 651.88 [25.66] | 1410.38 [55.52] |
| | | | | | RHS | | 2 CB LHS | 11860.98 [26148.95] | 11532.98 [25425.83] | | | | | 1002.21 [39.45] | 651.88 [25.66] | 1410.67 [55.53] |
| | | | | SLID-C4, SLID-D4 | LHS | | IEB (R) BOTTOM | 11484.19 [25318.27] | 11156.19 [24595.15] | | | | | 1006.83 [39.63] | 654.95 [25.78] | 1339.30 [52.72] |
| | | | | | RHS | | IEB (L) BOTTOM | 11454.16 [25252.07] | 11126.16 [24528.95] | | | | | 1001.47 [39.42] | 653.03 [25.70] | 1335.02 [52.55] |
| | | | | SLID-E4, SLID-F4 | LHS | | IEB (R) BOTTOM | 11883.58 [26198.77] | 11555.58 [25475.66] | | | | | 1007.81 [39.67] | 654.09 [25.75] | 1412.50 [55.61] |
| | | | | | RHS | | IEB (L) BOTTOM | 11853.56 [26132.59] | 11525.56 [25409.48] | | | | | 1002.63 [39.47] | 652.23 [25.67] | 1408.56 [55.45] |

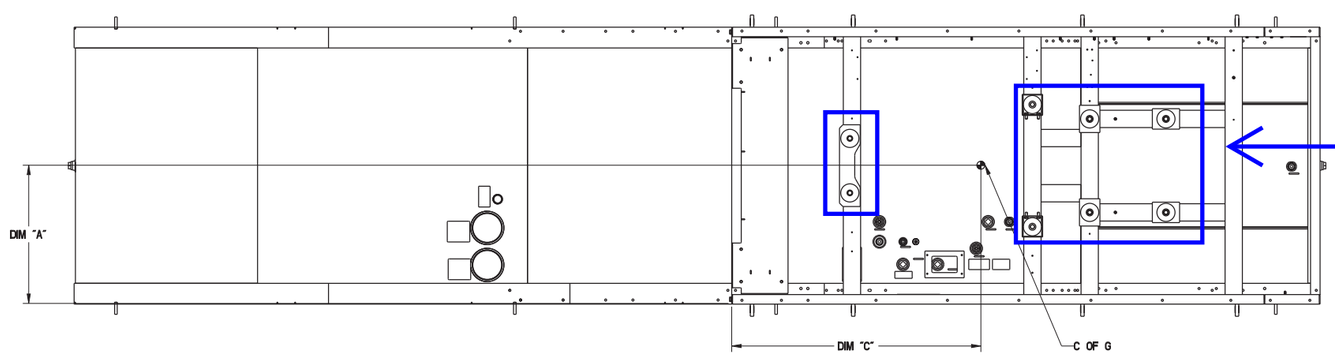


TOP VIEW

NOTE: THESE ARE THE GENERATOR VIBRATION ISOLATOR LOCATIONS. PLEASE REFER TO DRAWING #0402-0753 FOR MORE INFORMATION.

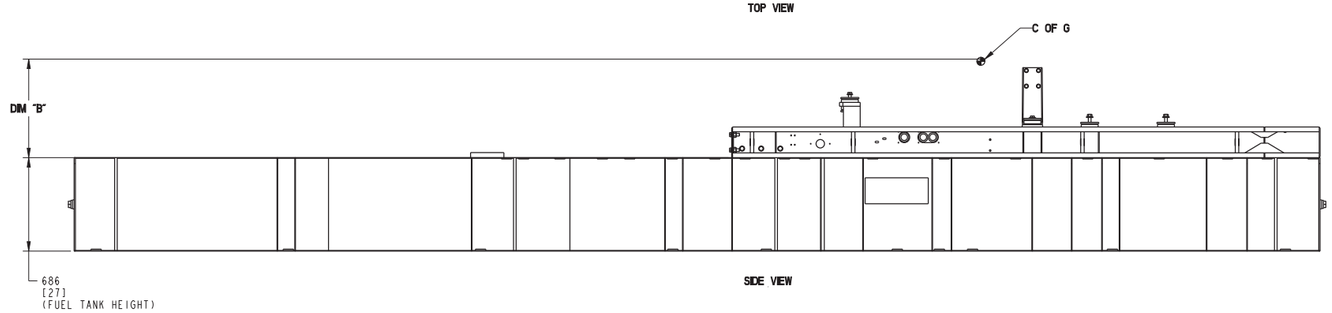


SIDE VIEW

| | |
|---|---|
| PART NUMBER: A074R018 | PART REVISION: F |
| PART NAME: OUTLINE,GENSET | |
| DRAWING CATEGORY: OUTLINE | |
| STATE: RELEASED | SHEET: 11 OF 14 |
| CUMMINS DATA CLASSIFICATION: CUMMINS CONFIDENTIAL | |

THIS DOCUMENT (AND THE INFORMATION SHOWN THEREON) IS CONFIDENTIAL AND PROPRIETARY AND SHALL NOT BE DISCLOSED TO OTHERS IN HARD COPY OR ELECTRONIC FORM. REPRODUCED BY ANY MEANS, OR USED FOR ANY PURPOSE WITHOUT WRITTEN CONSENT OF CUMMINS INC.

| | | | |
|---|---|---|---|
| MODEL/PLATFORM: S17 | | THIS PART IS SIMILAR TO: - | |
| UNLESS OTHERWISE SPECIFIED THE FOLLOWING SHALL APPLY | | | ANG. TOL.: ± 1° |
| DIMENSIONAL TOLERANCES: | X ± 1 | .X ± 0.8 | .XX ± 0.38 |
| HOLE SIZE 0.00-4.99 TOL. +0.15/-0.08 | HOLE SIZE 5.00-9.99 TOL. +0.20/-0.10 | HOLE SIZE 10.00-17.49 TOL. +0.25/-0.13 | HOLE SIZE 17.50-24.99 TOL. +0.30/-0.13 |

Cummins Inc.

DIMENSIONS ARE IN: MILLIMETERS
[ ] ARE IN: INCHES
SIZE: A0 SCALE:NTS
DIMENSIONING AND TOLERANCING PER: ASME Y14.5-2009
THIRD ANGLE PROJECTION
CAD SYSTEM PTC® Creo® Parametric

**PLEASE NOTE**
**This is NOT a pad drawing.**
**Please add at least 1' to overall length and width of generator when determining pad layout.**

NOTES:

1. DIMENSIONS IN [ ] ARE IN INCHES.
2. FUEL TANK HAS A FLANGE THICKNESS OF 4.76mm [.19 INCHES], ALLOW EXTRA LENGTH ON HARDWARE FOR UNEVENESS OF MOUNTING SURFACE.
3. LIFTING BASE OR FUEL TANK PERIMETER IS SHOWN. FOUNDATION SHOULD BE EXTENDED BEYOND THIS PERIMETER. SEE (1030) APPLICATION MANUAL.

**NOTE: Only this drawing shall be used for stub-up dimensional information**

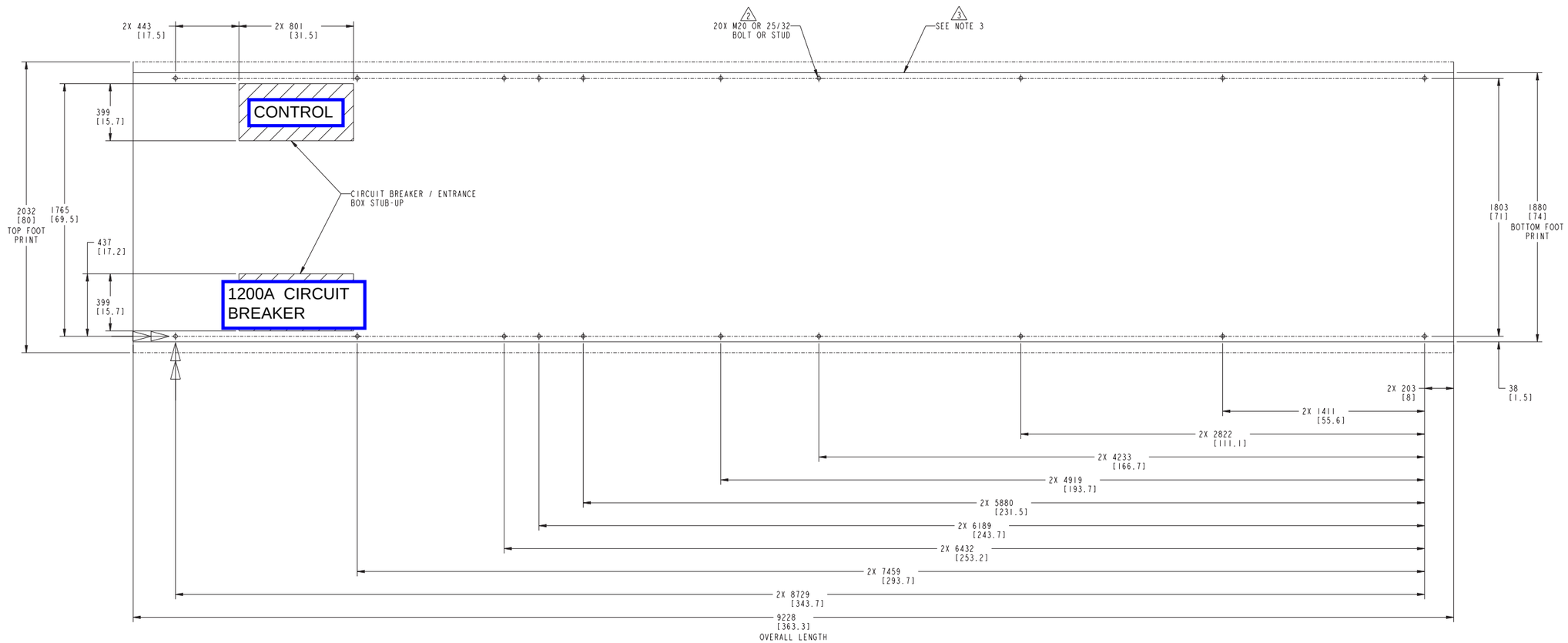


## 24HR RUN TIME FUEL TANK

| | | | |
|---|---|---|---|
| MODEL/PLATFORM: - | | THIS PART IS SIMILAR TO: - | |
| UNLESS OTHERWISE SPECIFIED THE FOLLOWING SHALL APPLY | | | ANG. TOL.: ± 0.5° |
| WALL THICKNESS: - | DRAFT ANGLES: - | EDGE RADII: - | FILLET RADII: - |
| DIMENSIONAL TOLERANCES: | X ± 1 | .X ± 0.8 | .XX ± 0.38 |
| HOLE SIZE 0.00-4.99 TOL. +0.15/-0.08 | HOLE SIZE 5.00-9.99 TOL. +0.20/-0.10 | HOLE SIZE 10.00-17.49 TOL. +0.25/-0.13 | HOLE SIZE 17.50-24.99 TOL. +0.30/-0.13 |

| | |
|---|---|
| PART NUMBER: A075K190 | PART REVISION: A |
| PART NAME: OUTLINE,GENSET | |
| DRAWING CATEGORY: OUTLINE | |
| STATE: RELEASED | SHEET: 1 OF 2 |
| CUMMINS DATA CLASSIFICATION: CUMMINS CONFIDENTIAL | |

THIS DOCUMENT (AND THE INFORMATION SHOWN THEREON) IS CONFIDENTIAL AND PROPRIETARY AND SHALL NOT BE DISCLOSED TO OTHERS IN HARD COPY OR ELECTRONIC FORM, REPRODUCED BY ANY MEANS, OR USED FOR ANY PURPOSE WITHOUT WRITTEN CONSENT OF CUMMINS INC.

Cummins Inc.

DIMENSIONS ARE IN: MILLIMETERS [ ] ARE IN: INCHES

SIZE: A0 SCALE:1

DIMENSIONING AND TOLERANCING PER: ASME Y14.5-2009

THIRD ANGLE PROJECTION

CAD SYSTEM PTC® Creo® Parametric

| TANK FEATURE REFERENCE TABLE | |
|---|---|
| A | 1-1/4" NPT, SPARE, CUSTOMER USE, PLASTIC PLUGGED |
| B | 1-1/4" NPT, SPARE, CUSTOMER USE, PLASTIC PLUGGED |
| C | 2" NPT, SPARE, CUSTOMER USE, PLASTIC PLUGGED |
| D | 2" NPT, ENGINE RETURN, 1/2" NPT FULL LENGTH DIP TUBE |
| E | 2" NPT, SPARE, CUSTOMER USE, STEEL PLUGGED |
| F | 1/2" NPT, SPARE, CUSTOMER USE, STEEL PLUGGED |
| G | 2" NPT, SPARE, CUSTOMER USE, PLASTIC PLUGGED |
| H | 1" NPT, SPARE, CUSTOMER USE, STEEL PLUGGED |
| I | 1-1/2" NPT, DIRECT READING GAUGE, PLASTIC PLUGGED |
| J | 2" NPT, ENGINE SUPPLY, 1/2" NPT FULL LENGTH DIP TUBE |
| K | 8" NPT, RUPTURE BASIN EMERGENCY VENT, PLASTIC PLUGGED |
| L | 8" NPT, EMERGENCY TANK VENT, PLASTIC PLUGGED |
| M | 2" NPT, NORMAL TANK VENT, PLASTIC PLUGGED |
| N | 2" NPT, PROCESS POSITIONER |
| O | 2" NPT, PROCESS POSITIONER |

NOTES:

1. THIS SUBTANK IS UL-142A / ULC-S601 LISTED UNDER THE SPECIAL TANK CATEGORY, AS A SECONDARY CONTAINMENT GENERATOR BASE TANK. THE TANK MANUFACTURER IS RESPONSIBLE FOR THE DESIGN AND CONSTRUCTION OF THE TANK. THIS INCLUDES THE TYPE, AND GAUGE OF STEEL USED AND ALL WELDING REQUIRED BY UL-142A / ULC-S601.
2. PAINT SPECIFICATIONS:
   EXTERIOR - SHALL MEET REQUIREMENTS AS PER CUMMINS SPEC ESA044R205
   INTERIOR - SHALL MEET REQUIREMENTS AS PER CUMMINS SPEC ESA047M616
3. SUBTANK TO BE PRESSURE TESTED TO: 3 psig FOR SECONDARY CONTAINMENT TANKS PER MHI7470.
4. LIFTING GUSSETS TO BE LIFT TESTED TO: 10,000 LBS (4536 KG)
5. CUMMINS POWER SYSTEMS DESIGN ENGINEERING SHALL BE NOTIFIED OF, AND PERMITTED TO REVIEW, ALL CHANGES PRIOR TO IMPLEMENTATION. CUMMINS POWER SYSTEMS APPROVAL SHALL BE REQUIRED FOR ALL CHANGES INVOLVING INTERFACING DIMENSIONS AND/OR INFORMATION DISPLAYED ON THIS DOCUMENT.
6. ALL DIMENSION SHOWN ARE FOR INSPECTION PURPOSE ONLY, DESIGN DETAIL & TOLERANCING CAN BE FOUND ON SUPPLIER DRAWING.
7. SURFACE APPEARANCE TO BE CLASS B.
8. APPROXIMATE WEIGHT BASED ON SUPPLIER DATA: 6000LBS.
9. FUEL VOLUME:
   - USABLE 1770 GALLONS
   - FILLABLE 1975 GALLONS

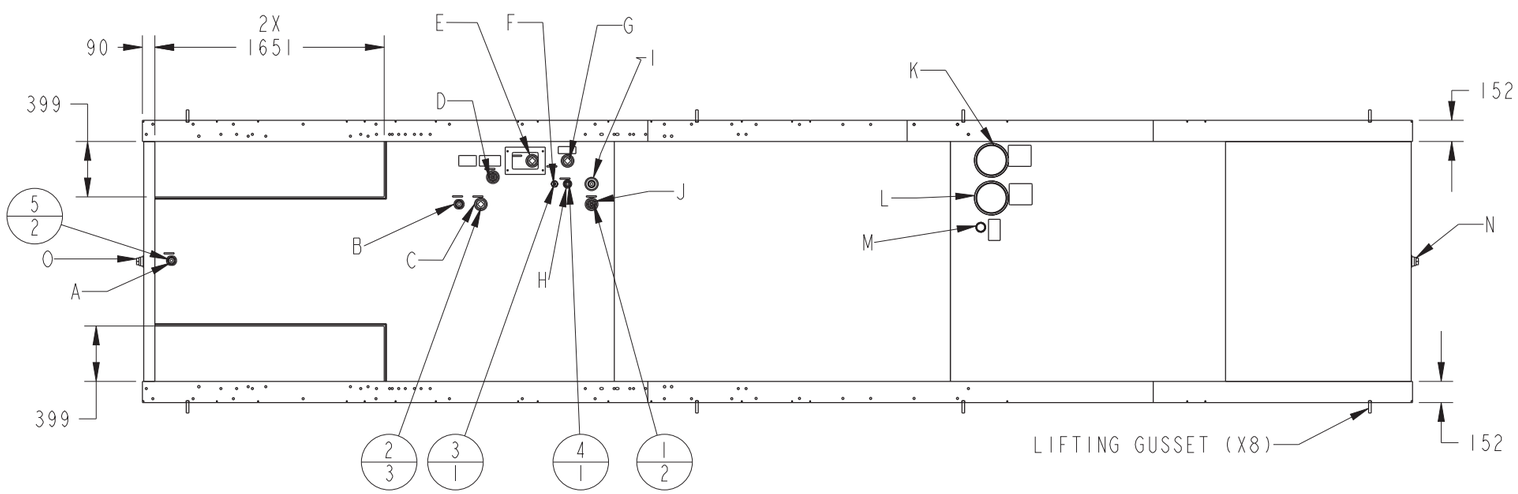


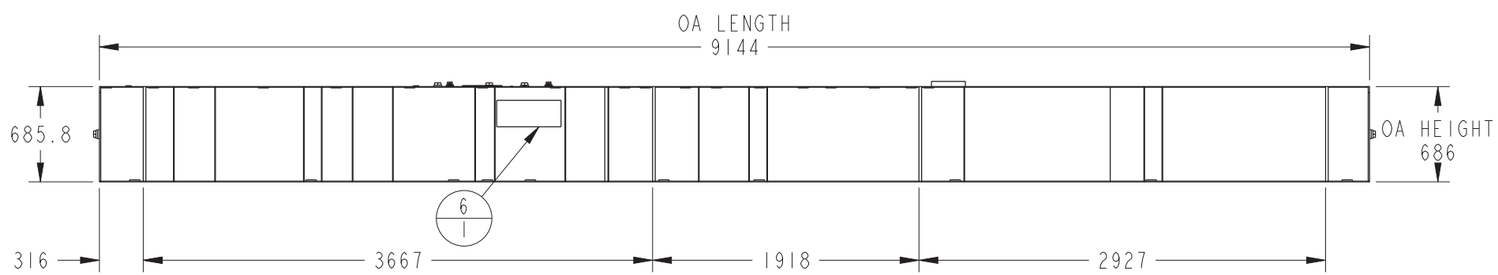


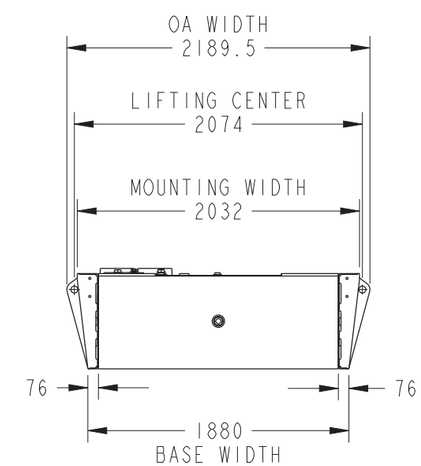


| | |
|---|---|
| PART NUMBER: A068F520 | PART REVISION: D |
| PART NAME: TANK,FUEL | |
| DRAWING CATEGORY: DETAIL | |
| STATE: RELEASED | SHEET: 1 OF 4 |
| CUMMINS DATA CLASSIFICATION: CUMMINS CONFIDENTIAL | |

THIS DOCUMENT (AND THE INFORMATION SHOWN THEREON) IS CONFIDENTIAL AND PROPRIETARY AND SHALL NOT BE DISCLOSED TO OTHERS IN HARD COPY OR ELECTRONIC FORM, REPRODUCED BY ANY MEANS, OR USED FOR ANY PURPOSE WITHOUT WRITTEN CONSENT OF CUMMINS INC.

Cummins Inc.

DIMENSIONS ARE IN: MILLIMETERS
[ ] ARE IN: -

SIZE: A2 SCALE:NTS

DIMENSIONING AND TOLERANCING PER:
ASME Y14.5-2009

THIRD ANGLE PROJECTION

CAD SYSTEM
PTC® Creo® Parametric

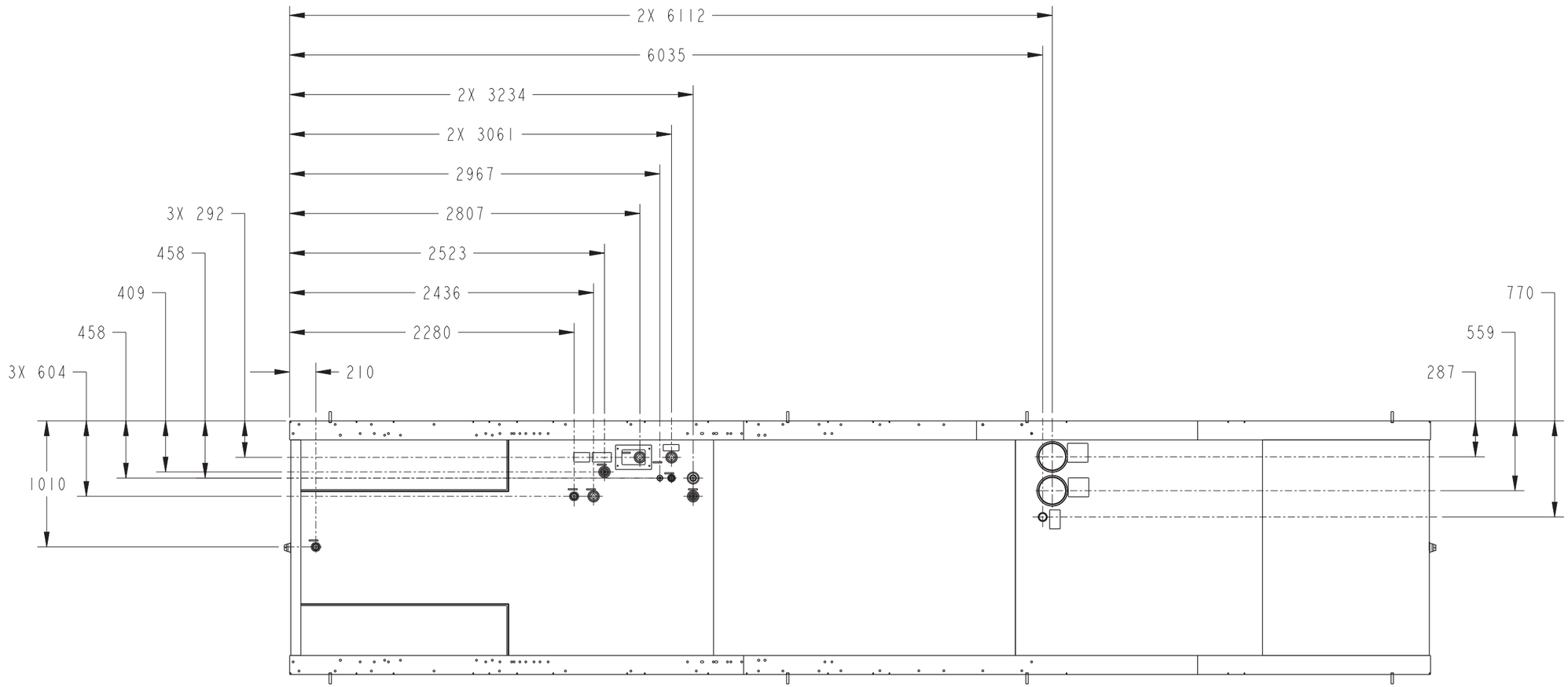


OPTIONAL FEATURE PORT POSITIONS

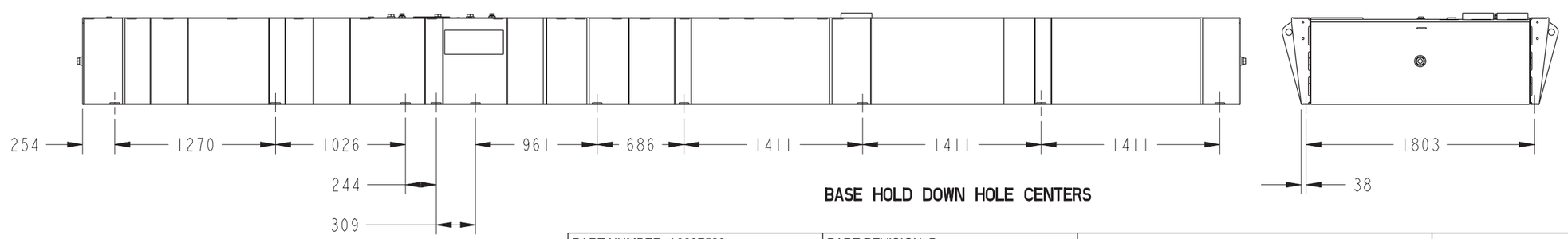


BASE HOLD DOWN HOLE CENTERS

| | |
|---|---|
| PART NUMBER: A068F520 | PART REVISION: D |
| PART NAME: TANK,FUEL | |
| DRAWING CATEGORY: DETAIL | |
| STATE: RELEASED | SHEET: 2 OF 4 |
| CUMMINS DATA CLASSIFICATION: CUMMINS CONFIDENTIAL | |

THIS DOCUMENT (AND THE INFORMATION SHOWN THEREON) IS CONFIDENTIAL AND PROPRIETARY AND SHALL NOT BE DISCLOSED TO OTHERS IN HARD COPY OR ELECTRONIC FORM, REPRODUCED BY ANY MEANS, OR USED FOR ANY PURPOSE WITHOUT WRITTEN CONSENT OF CUMMINS INC.

Cummins Inc.

DIMENSIONS ARE IN: MILLIMETERS
[ ] ARE IN: -

SIZE: A2 SCALE:NTS

DIMENSIONING AND TOLERANCING PER:
ASME Y14.5-2009

THIRD ANGLE PROJECTION

CAD SYSTEM
PTC® Creo® Parametric

## SHORT CORE ALTERNATOR: S6C, S6D
## APPLICABLE FOR OPEN AND ENCLOSED GENSET

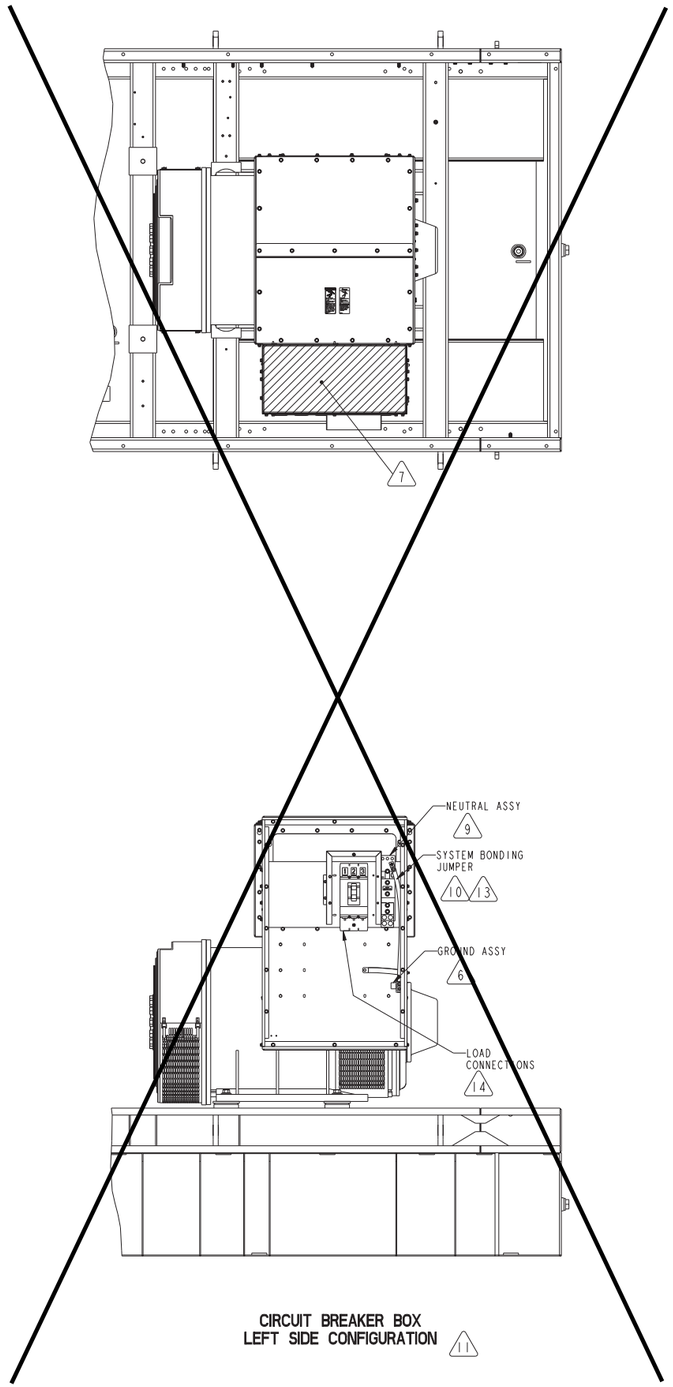


CIRCUIT BREAKER BOX
LEFT SIDE CONFIGURATION 11

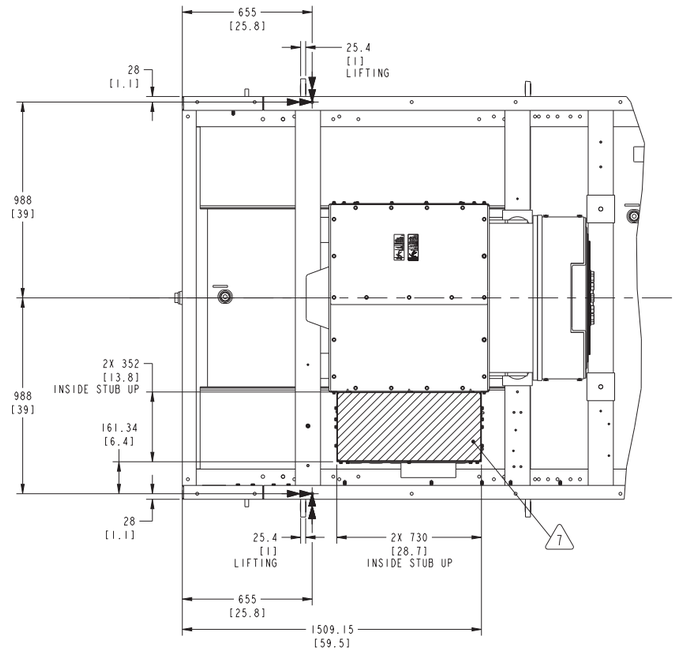


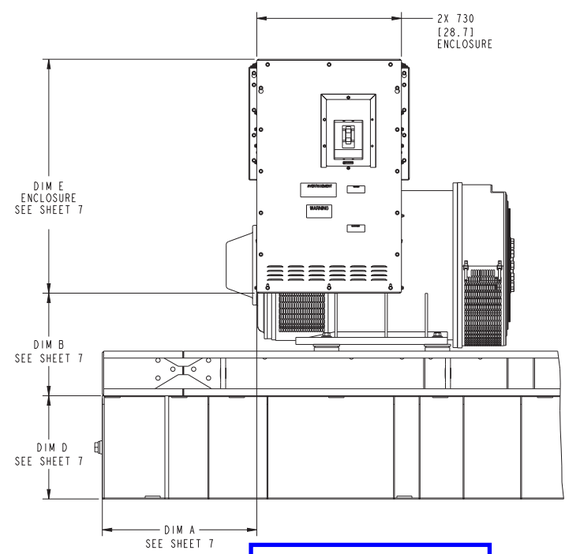


CIRCUIT BREAKER BOX
RIGHT SIDE CONFIGURATION

NOTES:

1. DIMENSIONS SHOWN IN [ ] ARE IN INCHES.
2. COMMON REFERENCE POINT ON GENSET SKID ( ——▶ ). POINTS TO ANCHORING HOLE ON SKID. SEE GENSET_OUTLINE (FOUNDATION) FOR DETAILS.
3. BOTTOM COVER IS ADJUSTABLE VERTICALLY PLUS OR MINUS 6 [0.25] TO EASE CONDUIT ATTACHMENT.
4. CONDUITS AND WIRING SHOULD BE DESIGNED AND INSTALLED TO ALLOW NORMAL GENERATOR SET MOVEMENT DURING CRANKING, SHUTDOWN OR EXPECTED SEISMIC DISTURBANCES.
5. ON FLORIDA UNITS WITH TANKS (FEATURE CODE L116) ADD 106 [4.2] FOR RISER BEAMS THAT ARE REQUIRED ON THE UNDERSIDE OF THE TANK.
6. EQUIPMENT GROUND AND GROUNDING ELECTRODE LUG IS MECHANICAL TYPE:
   COPPER 400 MCM-6 AWG
   SCREW 11/16"-16 UN-2B
   5/16" HEX WRENCH
   RECOMMENDED TORQUES:
   250 MCM-1 AWG - 375 IN-LBS
   2-6 AWG - 275 IN-LBS
7. AREA SHOWN INDICATES APPROXIMATE OFFSET PLACEMENT OF THE ELECTRICAL FLEXIBLE CONDUIT STUB-UP AREA ORIGINATING IN CONCRETE OR OTHER TYPE OF BASE FLOORING RELATIVE TO CIRCUIT BREAKER LOCATION WITHIN ENCLOSURE TO PROVIDE VIBRATION PROTECTION.
8. WIRE-CONDUIT COMBINATIONS MEET NEC AND CEC. TO USE OTHER COMBINATIONS, REFER TO APPLICABLE CODES TO ENSURE THAT WIRE AMPACITY, BEND SPACE AND GUTTER SPACE MEET THE REQUIREMENTS.
9. NEUTRAL LUG IS MECHANICAL TYPE:
   COPPER #2-600 MCM
   SCREW 15/16"-16 UN-2B
   3/8" HEX WRENCH
   RECOMMENDED TORQUES:
   600 MCM-4 AWG - 500 IN-LBS
10. TORQUE TO 9.8-11.9 Nm [7.2-8.8 FT-LBS] HARDWARE IS PROVIDED WITH BONDING JUMPER.
11. ALL DIMENSIONS SHOWN FOR RIGHT SIDE ALSO APPLY TO LEFT SIDE IN MIRROR ORIENTATION.
12. "NS" SHUNT TRIP HAS NO INTERNAL CONTACTS, IT MUST BE USED IN CONJUNCTION WITH AUXILIARY CONTACTS TO ACCEPT CONTINUOUS APPLIED VOLTAGE. IT CAN OPERATE AT 75% OF NOMINAL VOLTAGE.
13. 250 MCM SYSTEM BONDING JUMPER SIZED PER NEC TABLE 250.122 USING COPPER CABLE FOR A MAXIMUM AMPACITY RATING OF 2000 AMPS.
14. CIRCUIT BREAKER LUGS - REFER TO RECOMMENDED TORQUE ON LABEL.
15. MINIMUM WIRE BENDING SPACE AT BREAKER TERMINALS CALCULATED PER NEC TABLE 312.6(B) USING 500 MCM CABLES (2 WIRES PER TERMINAL), MECHANICAL LUGS USED AS TERMINALS. NUMBER OF CONDUCTORS PER PHASE CALCULATED PER TABLE 310.16 USING COPPER CABLES RATED AT 75°C ON A MAXIMUM AMBIENT TEMP OF 40°C.
16. FOR CONDUIT RELATED INFORMATION, REFER TABLE 2.
17. MINIMUM WIRE BENDING SPACE AT GROUND TERMINALS CALCULATED PER NEC TABLE 312.6(A) USING [3/0-14] CABLES (1 WIRE PER TERMINAL), MECHANICAL LUGS USED AS TERMINALS.
18. OPEN AND ENCLOSED GENSET CONFIGURATIONS CAN BE WITH OR WITHOUT FUEL TANK.

| | | | |
|---|---|---|---|
| LAST DATUM LETTER USED: - | | LAST REFERENCE LETTER USED: E | |
| MODEL/PLATFORM: - | | THIS PART IS SIMILAR TO: - | |
| UNLESS OTHERWISE SPECIFIED THE FOLLOWING SHALL APPLY | | ANG. TOL.: ± 1° | |
| SURFACE FINISH PER: - | | SURFACE FINISH: - | |
| WALL THICKNESS: - | DRAFT ANGLES: - | EDGE RADII: - | FILLET RADII: - |
| DIMENSIONAL TOLERANCES: | X ± 1 | .X ± 0.8 | .XX ± 0.38 |
| HOLE SIZE 0.00-4.99 TOL. +0.15/-0.08 | HOLE SIZE 5.00-9.99 TOL. +0.20/-0.10 | HOLE SIZE 10.00-17.49 TOL. +0.25/-0.13 | HOLE SIZE 17.50-24.99 TOL. +0.30/-0.13 |

| | |
|---|---|
| PART NUMBER: A075N016 | PART REVISION: B |
| PART NAME: OUTLINE:CIRCUIT BREAKER | |
| DRAWING CATEGORY: OUTLINE | |
| STATE: RELEASED | SHEET: 1 OF 8 |
| CUMMINS DATA CLASSIFICATION: CUMMINS CONFIDENTIAL | |

THIS DOCUMENT (AND THE INFORMATION SHOWN THEREON) IS CONFIDENTIAL AND PROPRIETARY AND SHALL NOT BE DISCLOSED TO OTHERS IN HARD COPY OR ELECTRONIC FORM, REPRODUCED BY ANY MEANS, OR USED FOR ANY PURPOSE WITHOUT WRITTEN CONSENT OF CUMMINS INC.

Cummins Inc.

DIMENSIONS ARE IN: MILLIMETERS
[ ] ARE IN: -
SIZE: A0 SCALE: 1/32
DIMENSIONING AND TOLERANCING PER: ASME Y14.5-2009
THIRD ANGLE PROJECTION
CAD SYSTEM PTC® Creo® Parametric

# BOTTOM ENTRY APPLICABLE FOR BOTH OPEN AND ENCLOSED GENSET

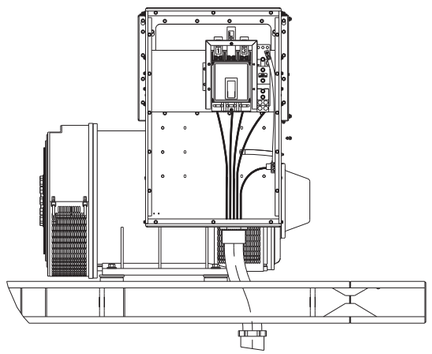

LEFT SIDE
BOTTOM ENTRY ROUTING EXAMPLE 11 16
800A MANUAL

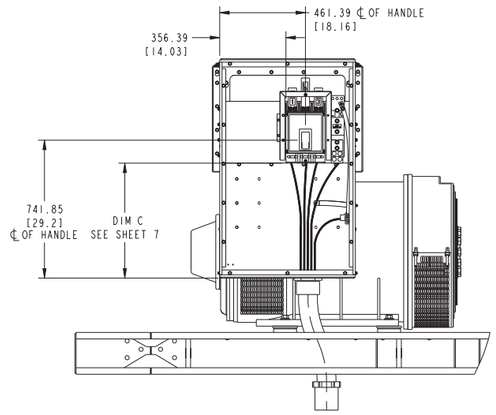


RIGHT SIDE
BOTTOM ENTRY ROUTING EXAMPLE 16
800A MANUAL

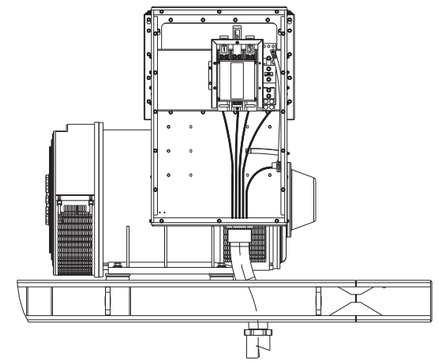

LEFT SIDE
BOTTOM ENTRY ROUTING EXAMPLE 11 16
800A MOTORIZED

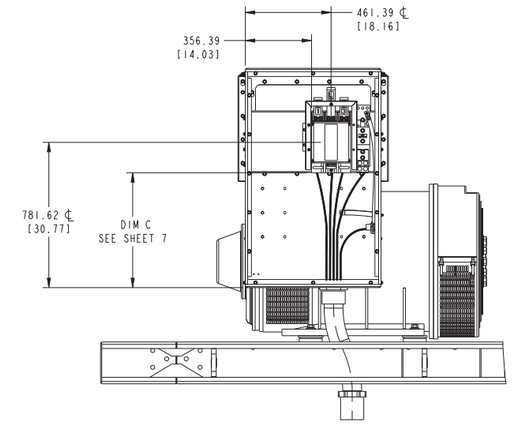


RIGHT SIDE
BOTTOM ENTRY ROUTING EXAMPLE 16
800A MOTORIZED

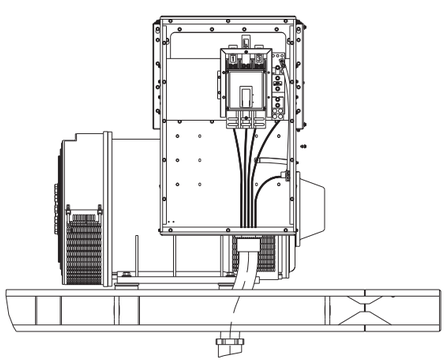

LEFT SIDE
BOTTOM ENTRY ROUTING EXAMPLE 11 16
1200A MANUAL

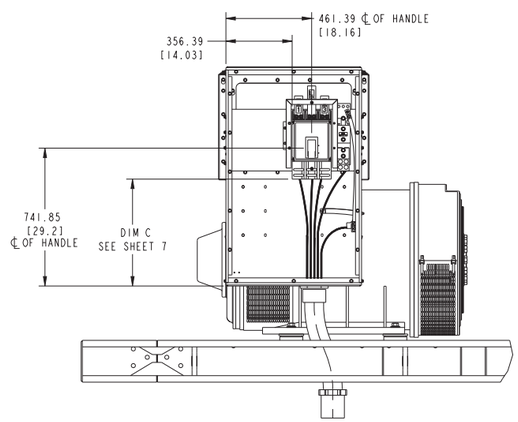


RIGHT SIDE
BOTTOM ENTRY ROUTING EXAMPLE 16
1200A MANUAL

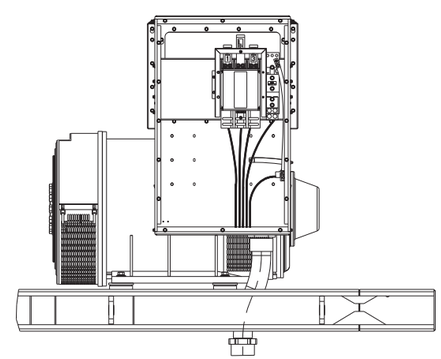

LEFT SIDE
BOTTOM ENTRY ROUTING EXAMPLE 11 16
1200A MOTORIZED

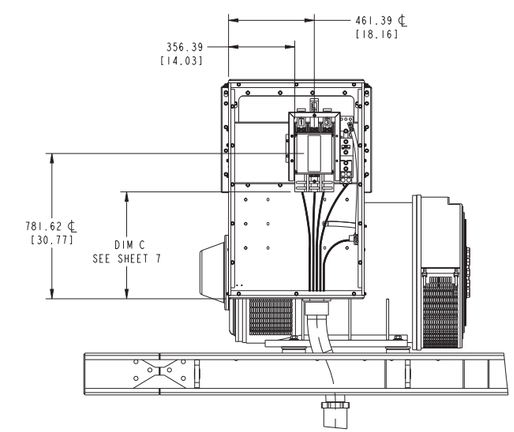


RIGHT SIDE
BOTTOM ENTRY ROUTING EXAMPLE 16
1200A MOTORIZED

| | | | |
|---|---|---|---|
| LAST DATUM LETTER USED: - | | LAST REFERENCE LETTER USED: E | |
| MODEL/PLATFORM: - | | THIS PART IS SIMILAR TO: - | |
| UNLESS OTHERWISE SPECIFIED THE FOLLOWING SHALL APPLY | | | ANG. TOL.: ± 1° |
| SURFACE FINISH PER: - | | SURFACE FINISH: - | |
| WALL THICKNESS: - | DRAFT ANGLES: - | EDGE RADII: - | FILLET RADII: - |
| DIMENSIONAL TOLERANCES: | X ± 1 | .X ± 0.8 | .XX ± 0.38 |
| HOLE SIZE 0.00-4.99 TOL. +0.15/-0.08 | HOLE SIZE 5.00-9.99 TOL. +0.20/-0.10 | HOLE SIZE 10.00-17.49 TOL. +0.25/-0.13 | HOLE SIZE 17.50-24.99 TOL. +0.30/-0.13 |

| | |
|---|---|
| PART NUMBER: A075N016 | PART REVISION: B |
| PART NAME: OUTLINE,CIRCUIT BREAKER | |
| DRAWING CATEGORY: OUTLINE | |
| STATE: RELEASED | SHEET: 5 OF 8 |

CUMMINS DATA CLASSIFICATION: CUMMINS CONFIDENTIAL
THIS DOCUMENT (AND THE INFORMATION SHOWN THEREON) IS CONFIDENTIAL AND PROPRIETARY AND SHALL NOT BE DISCLOSED TO OTHERS IN HARD COPY OR ELECTRONIC FORM, REPRODUCED BY ANY MEANS, OR USED FOR ANY PURPOSE WITHOUT WRITTEN CONSENT OF CUMMINS INC.

Cummins Inc.

| | | |
|---|---|---|
| DIMENSIONS ARE IN: MILLIMETERS<br>[ ] ARE IN: - | SIZE: A0 | SCALE: 1/32 |
| DIMENSIONING AND TOLERANCING PER:<br>ASME Y14.5-2009 | THIRD ANGLE PROJECTION | CAD SYSTEM<br>PTC® Creo® Parametric |

TOP ENTRY
RECOMMENDED CONDUIT LOCATIONS 16
250-600A, LHS/RHS

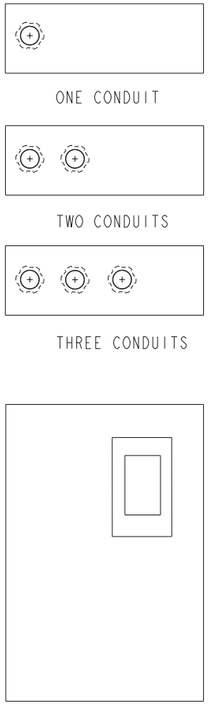


BOTTOM ENTRY
RECOMMENDED CONDUIT LOCATIONS 16
250-3000A, LHS/RHS

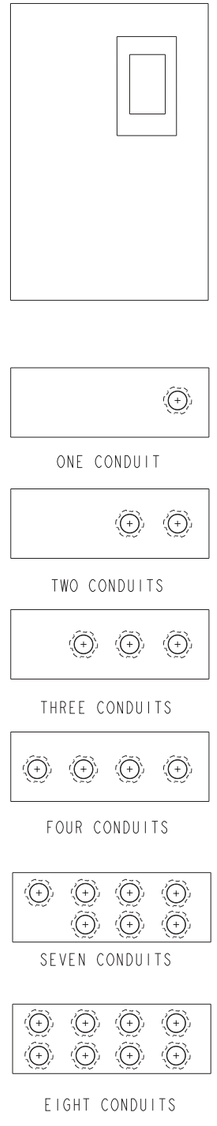


## TABLE 1

| UL/IEC LUGS | | | | | | | ACCESSORY SPECIFICATIONS | | | |
|---|---|---|---|---|---|---|---|---|---|---|
| LUG | FRAME | MAX AMPS | WIRE RANGE COPPER | DIM B ±25 [1.0] | DIM C ±25 [1.0] | DIM E ±25 [1.0] | ACCESSORY DESCRIPTION | CONTACT RATING | INRUSH | CONNECTION TYPE |
| | NSJ/NLG | 250A 3-POLE | #2-600 KCMIL (Cu) #2-500 KCMIL (Al) | 517.52 [20.4] | 602.32 [23.71] | 1180 [46.45] | 24 VDC SHUNT TRIP 12 | ---------- | 10A | COMPRESSION TERMINALS #20-16 AWG OR SMALLER TORQUE:1.13 NM [10 LB-IN] |
| | | 400A-600A 3 POLE | 2/0-500 KCMIL (Cu/Al) | | | | 1 EA. FORM C 1 AUX CONTACT + 1 TRIP ALARM 12 | 6A AT 240 VAC, 6A AT 480 VAC, 3A AT 600 VAC, 2.5A AT 48 VDC, 0.8A AT 125VDC, 0.3A AT 250 VDC | ---- | |
| | PJL | 250A 3-POLE | #2-600 KCMIL (Cu) #2-500 KCMIL (Al) | 517.52 [20.4] | 618.32 [24.34] | 1180 [46.45] | 24 VDC SHUNT TRIP 12 | ---------- | 10A | COMPRESSION TERMINALS #20-16 AWG OR SMALLER TORQUE:1.13 NM [10 LB-IN] |
| | | 400A-600A 3-POLE | 2/0-500 KCMIL (Cu/Al) | | | | 1 EA. FORM C 1 AUX CONTACT + 1 TRIP ALARM 12 | 6A AT 240 VAC, 6A AT 480 VAC, 3A AT 600 VAC, 2.5A AT 48 VDC, 0.8A AT 125VDC, 0.3A AT 250 VDC | ---- | |
| | PJ | 800A 3-POLE | 3/0-500 KCMIL | 517.52 [20.4] | 618.32 [24.34] | 1180 [46.45] | 24 VDC SHUNT TRIP | ---------- | 200VA | COMPRESSION TERMINALS FOR 1 OR 2 #18-14 AWG. TORQUE:1.13 NM [10 LB-IN] |
| | | | | | | | 1 EA. FORM C 1 AUX CONTACT + 1 TRIP ALARM | 6A AT 240 VAC, 6A AT 480 VAC, 3A AT 600 VAC, 2.5A AT 48 VDC, 0.8A AT 125VDC, 0.3A AT 250 VDC | ---- | COMPRESSION TERMINALS FOR 1 OR 2 #18-16 AWG. TORQUE:1.13 NM [10 LB-IN] |
| | PJ | 1200A 3-POLE | 3/0-500 KCMIL | 517.52 [20.4] | 575.12 [22.64] | 1180 [46.45] | 24 VDC SHUNT TRIP | ---------- | 200VA | COMPRESSION TERMINALS FOR 1 OR 2 #18-14 AWG. TORQUE:1.13 NM [10 LB-IN] |
| | | | | | | | 1 EA. FORM C 1 AUX CONTACT + 1 TRIP ALARM | 6A AT 240 VAC, 6A AT 480 VAC, 3A AT 600 VAC, 2.5A AT 48 VDC, 0.8A AT 125VDC, 0.3A AT 250 VDC | ---- | COMPRESSION TERMINALS FOR 1 OR 2 #18-16 AWG. TORQUE:1.13 NM [10 LB-IN] |
| | SCHNEIDER ELECTRIC NW 3000/2500/2000/1600 (ELECTRICALLY OPERATED) 1600-3000 AMP BREAKERS BUS BARS STANDARD W/MICROLOGIC 5.0 TRIP UNIT | | NEMA HOLE PATTERN | 517.52 [20.4] | 491.24 [19.34] | 1180 [46.45] | 24 VDC SHUNT TRIP | ---------- | 200VA | PUSH-IN TERMINALS FOR 1 OR 2 #18-14 AWG. |
| | | | | | | | 1 EA. FORM C 4 AUX CONTACT + 1 TRIP ALARM | 6A AT 240 VAC, 6A AT 480 VAC, 3A AT 600 VAC, 2.5A AT 48 VDC, 0.8A AT 125VDC, 0.3A AT 250 VDC | ---- | PUSH-IN TERMINALS FOR 1 OR 2 #18-16 AWG. |
| | SQUARE D R 2500/2000/1600 3-POLE 1600-2500 AMP BUS BARS STANDARD W/MICROLOGIC 5.0 TRIP UNIT | | NEMA HOLE PATTERN | 517.52 [20.4] | 567.36 [22.34] | 1180 [46.45] | 24 VDC SHUNT TRIP | ---------- | 200VA | COMPRESSION TERMINALS FOR 1 OR 2 #18-14 AWG. TORQUE:1.13 NM [10 LB-IN] |
| | | | | | | | 1 EA. FORM C 4 AUX CONTACT + 1 TRIP ALARM | 6A AT 240 VAC, 6A AT 480 VAC, 3A AT 600 VAC, 2.5A AT 48 VDC, 0.8A AT 125VDC, 0.3A AT 250 VDC | ---- | COMPRESSION TERMINALS FOR 1 OR 2 #18-16 AWG. TORQUE:1.13 NM [10 LB-IN] |
| | SCHNEIDER ELECTRIC NW 3000/2500/2000/1600 (ELECTRICALLY OPERATED) W/OPTIONAL LUG 1600-3000AMP BREAKERS TORQUE 375 IN LBS [42 Nm] | | #2-600 KCMIL | 517.52 [20.4] | 491.24 [19.34] | 1180 [46.45] | 24 VDC SHUNT TRIP | ---------- | 200VA | PUSH-IN TERMINALS FOR 1 OR 2 #18-16 AWG. |
| | | | | | | | 1 EA. FORM C 4 AUX CONTACT + 1 TRIP ALARM | 6A AT 240 VAC, 6A AT 480 VAC, 3A AT 600 VAC, 2.5A AT 48 VDC, 0.8A AT 125VDC, 0.3A AT 250 VDC | ---- | PUSH-IN TERMINALS FOR 1 OR 2 #18-16 AWG. |
| | SQUARE D R 2500/2000/1600 W/OPTIONAL LUG 1600-2500 AMP BREAKERS TORQUE 375 IN LBS [42 Nm] | | #2-600 KCMIL | 517.52 [20.4] | 567.36 [22.34] | 1180 [46.45] | 24 VDC SHUNT TRIP | ---------- | 200VA | COMPRESSION TERMINALS FOR 1 OR 2 #18-14 AWG. TORQUE:1.13 NM [10 LB-IN] |
| | | | | | | | 1 EA. FORM C 4 AUX CONTACT + 1 TRIP ALARM | 6A AT 240 VAC, 6A AT 480 VAC, 3A AT 600 VAC, 2.5A AT 48 VDC, 0.8A AT 125VDC, 0.3A AT 250 VDC | ---- | COMPRESSION TERMINALS FOR 1 OR 2 #18-16 AWG. TORQUE:1.13 NM [10 LB-IN] |

## TABLE 2

TRANSLATED FROM NEC BOOK. FOR 75C TEMPERATURE RATED CONDUCTOR AT 40C AMBIENT TEMPERATURE AND ANNEX C (LIQUID TIGHT FLEXIBLE METAL CONDUIT - LFCM) 8

| MAX BRKR AMPS | WIRE (COPPER) | | TOTAL NUMBER OF CONDUITS | |
|---|---|---|---|---|
| | QTY | SIZE | QTY | SIZE (IN INCHES) |
| 3000A | 8 | 700 KCMIL | 8 | 4 |
| 2500A | 8 | 500 KCMIL | 8 | 4 |
| 2000A | 8 | 350 KCMIL | 8 | 3 |
| 1600A | 7 | 300 KCMIL | 7 | 3 |
| 1200A | 4 | 500 KCMIL | 4 | 4 |
| 800A | 3 | 350 KCMIL | 3 | 3 1/2 |
| 600A | 2 | 350 KCMIL | 2 | 3 1/2 |
| 400A | 1 | 600 KCMIL | 1 | 4 |
| 250A | 1 | 500 KCMIL | 1 | 4 |

## TABLE 3

| GENSET MODEL | GENSET TYPE | ALTERNATOR MODEL | DIM "A" |
|---|---|---|---|
| ☐ C600D6E | OPEN | S6C,S6D | 779.15 [30.68] |
| ☐ C750D6E | | | |
| ☐ C800D6E | | S6E,S6F | 659.15 [25.95] |
| ☐ C900D6E | ENCLOSED | S6C,S6D,S6E,S6F | 779.15 [30.68] |
| ☐ C1000D6E | | | |

## TABLE 4

| MODEL NAME | TANK/LIFT BASE FEATURE CODE | TANK CAPACITY (GAL) | HEIGHT DIM_D |
|---|---|---|---|
| C600D6E C750D6E | C344-2 (12 HR) | 885 [34.84] | 521 [20.51] |
| C800D6E | | | |
| C900D6E C1000D6E | C345-2 (24 HR) | 1770 [69.69] | 686 [27] |

| | | | |
|---|---|---|---|
| LAST DATUM LETTER USED: - | | LAST REFERENCE LETTER USED: E | |
| MODEL/PLATFORM: - | | THIS PART IS SIMILAR TO: - | |
| UNLESS OTHERWISE SPECIFIED THE FOLLOWING SHALL APPLY | | | ANG. TOL.: ± 1° |
| SURFACE FINISH PER: - | | SURFACE FINISH: | |
| WALL THICKNESS: - | DRAFT ANGLES: - | EDGE RAD11: - | FILLET RAD11: - |
| DIMENSIONAL TOLERANCES: | X ± 1 | .X ± 0.8 | .XX ± 0.38 |
| HOLE SIZE 0.00-4.99 TOL. +0.15/-0.08 | HOLE SIZE 5.00-9.99 TOL. +0.20/-0.10 | HOLE SIZE 10.00-17.49 TOL. +0.25/-0.13 | HOLE SIZE 17.50-24.99 TOL. +0.30/-0.13 |

| | |
|---|---|
| PART NUMBER: A075N016 | PART REVISION: B |
| PART NAME: OUTLINE,CIRCUIT BREAKER | |
| DRAWING CATEGORY: OUTLINE | |
| STATE: RELEASED | SHEET: 7 OF 8 |
| CUMMINS DATA CLASSIFICATION: CUMMINS CONFIDENTIAL | |

THIS DOCUMENT (AND THE INFORMATION SHOWN THEREON) IS CONFIDENTIAL AND PROPRIETARY AND SHALL NOT BE DISCLOSED TO OTHERS IN HARD COPY OR ELECTRONIC FORM. REPRODUCED BY ANY MEANS, OR USED FOR ANY PURPOSE WITHOUT WRITTEN CONSENT OF CUMMINS INC.

Cummins Inc.

DIMENSIONS ARE IN: MILLIMETERS
[ ] ARE IN: -
SIZE: AO SCALE:1/32
DIMENSIONING AND TOLERANCING PER: ASME Y14.5-2009
THIRD ANGLE PROJECTION
CAD SYSTEM PTC® Creo® Parametric

| 0402_0753 | C | Pro/ENGINEER | METRIC DWG |
|---|---|---|---|

| REL NO | LTR | NO | REVISION | ZONE | DR | CHKR | APPROVED | DATE |
|---|---|---|---|---|---|---|---|---|
| FRD3636 | A | 1 | PRODUCTION_RELEASE | - | DJH | DAN | DAN | 12-02-99 |
| FRD4046 | B | 1 | CORRECT TYPING ERROR | 2-D | DJH | DAN | DAN | 01-15-00 |
| FRD8075 | C | 1 | ADD NOTES 2 AND 3. | - | DJH | DAN | DAN | 02-12-01 |
| | | 2 | UPDATED FORMAT | - | DJH | DAN | DAN | 02-12-01 |

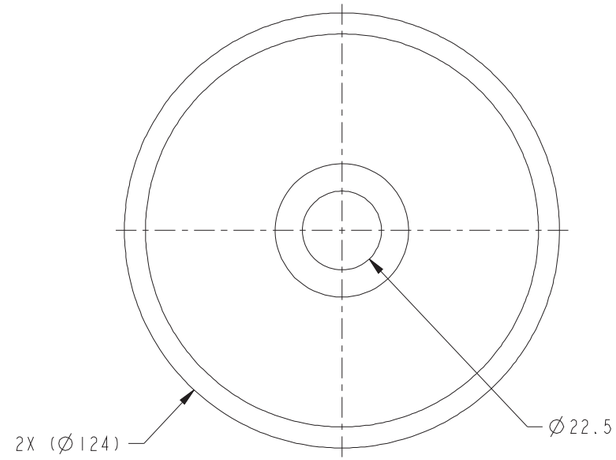


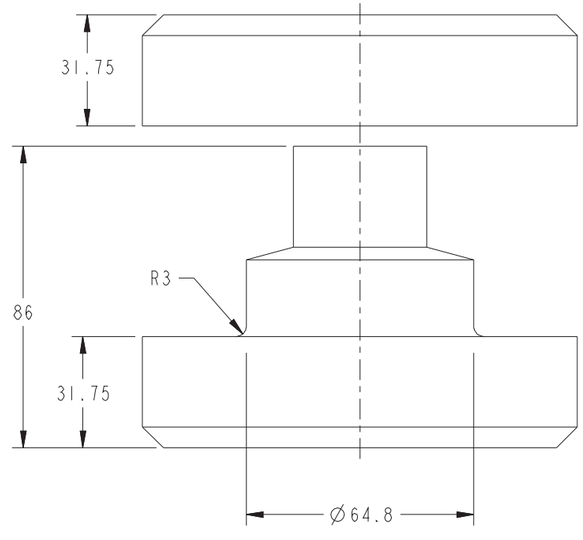


NOTE:

1. THIS PART IS VENDOR SOURCE CONTROLLED.
2. MOLDED SECTIONS SHALL BE FULLY FILLED AND FREE OF OF SURFACE BLEMISHES OR SUB-SURFACE DEFECTS.
3. END FACES OF CENTER SLEEVE SHALL BE FREE OF RUBBER FLASH.

| ITEM | PART NO | DWG SIZE | DESCRIPTION OR MATERIAL | REF DES |
|---|---|---|---|---|

DO NOT SCALE PRINT

ANG TOL ± 1.0°

DRAWN TO SCALE OF 1/1

TOLERANCE UNLESS OTHERWISE SPECIFIED

| | mm | Inch |
|---|---|---|
| DIM | X ± 1<br>.X ± 0.8<br>.XX ± 0.38 | .X ±<br>.XX ±<br>.XXX ± |
| HOLE | 0.09- 4.99 +0.15/-0.08<br>5.00- 9.99 +0.20/-0.10<br>10.00-17.49 +0.25/-0.13<br>17.50-24.99 +0.30/-0.13 | .004-.200 +.006/-.003<br>.201-.421 +.008/-.004<br>.422-.703 +.010/-.005<br>.704-.999 +.012/-.005 |

SIM TO . -
COPIED FROM . -
THIRD ANGLE PROJECTION

THIS DOCUMENT IS THE PROPERTY OF CUMMINS POWER GENERATION. IT CONTAINS PROPRIETARY AND CONFIDENTIAL INFORMATION WHICH MUST NOT BE DUPLICATED, USED OR DISCLOSED OTHER THAN EXPRESSLY AUTHORIZED BY CUMMINS POWER GENERATION OR IT'S REPRESENTATIVE

| | NAME | DATE |
|---|---|---|
| DR | D_HOFMEISTER | 05-25-99 |
| CHKR ☐ MFG ☒ | F_DEMEIRELES | 12-02-99 |
| APPROVED | D_NORRICK | 12-02-99 |

FOR INTERPRETATION OF DIMENSIONING AND TOLERANCING, SEE ANSI Y14.5M-1982

MODEL FIRST USED ON: DFEF,G,H,J,K

SITE CODE: PGA

CUMMINS POWER GENERATION
1400 73RD AVE NE
MINNEAPOLIS, MINNESOTA 55432

TITLE: ISOLATOR-VIBRATION .

DWG NO: 0402_0753

SHEET: 1 of 1

DWG SIZE: C

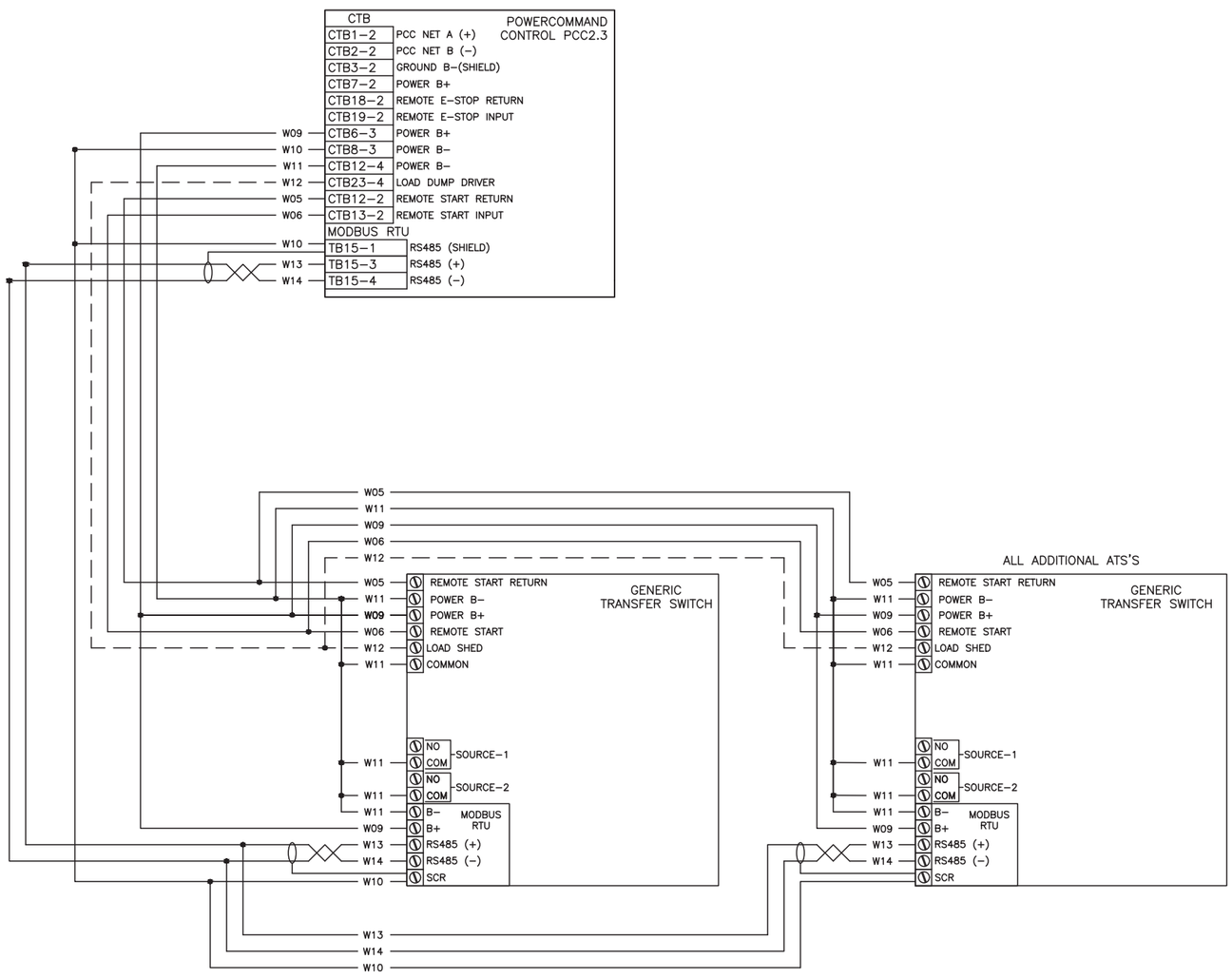


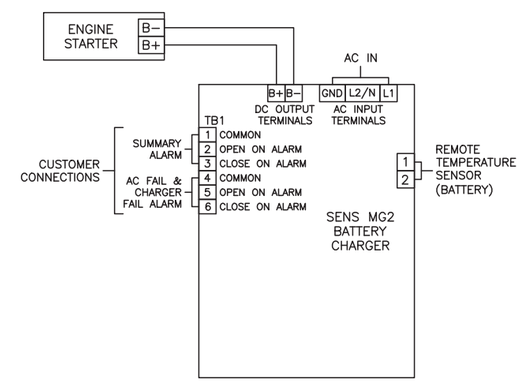


- ALL INTERCONNECT WIRING AND DATA CABLING IS TO BE DONE WITH STRANDED WIRE PER NFPA 37.
- PCC NET CABLE: BELDEN 9729. (24 AWG, STRANDED, SHIELDED, TWISTED PAIR)
- MODBUS RS485 CABLE: BELDEN 3106A. (22 AWG, STRANDED, SHIELDED, TWISTED PAIR)
- TOTAL NETWORK LENGTH NOT TO EXCEED 4000 FT.
- ATS LOAD SHED WIRING IS SHOWN FOR REF.-----

UNLESS OTHERWISE SPECIFIED, ALL DIMENSIONS ARE IN INCHES

TOLERANCES:
FRACTIONAL: .06
.X: .03
.XX: .01
.XXX:
ANGLES: .5°

| REFERENCES | | | |
|---|---|---|---|
| A073D299 | GENERIC ATS | PREP. BY: KDU | 12/22/25 |
| 0630-3440 | – | CHKD BY: – | – |
| – | – | MODIFIED BY: – | – |

FINISH: N/A

ENGINE FAMILY: PCC2300

GENERIC ATS

| | | | |
|---|---|---|---|
| CSSNA POWER GEN | SITE NAME: – – | CONTACT NAME: – | CUSTOMER PROJECT NO: – |
| | CONTRACTOR NAME: – | CONTACT NO: – | CSSNA PROJECT NO: – |

TITLE: PCC2.3 CONTROL / GENERIC ATS CENTUM S17

SIZE: B | DWG NO: PCC2.3 INTERCONNECT | REV –

SCALE: NONE | DO NOT SCALE PRINT | SHEET 1 OF 1

UNLESS OTHERWISE SPECIFIED,
ALL DIMENSIONS ARE IN INCHES

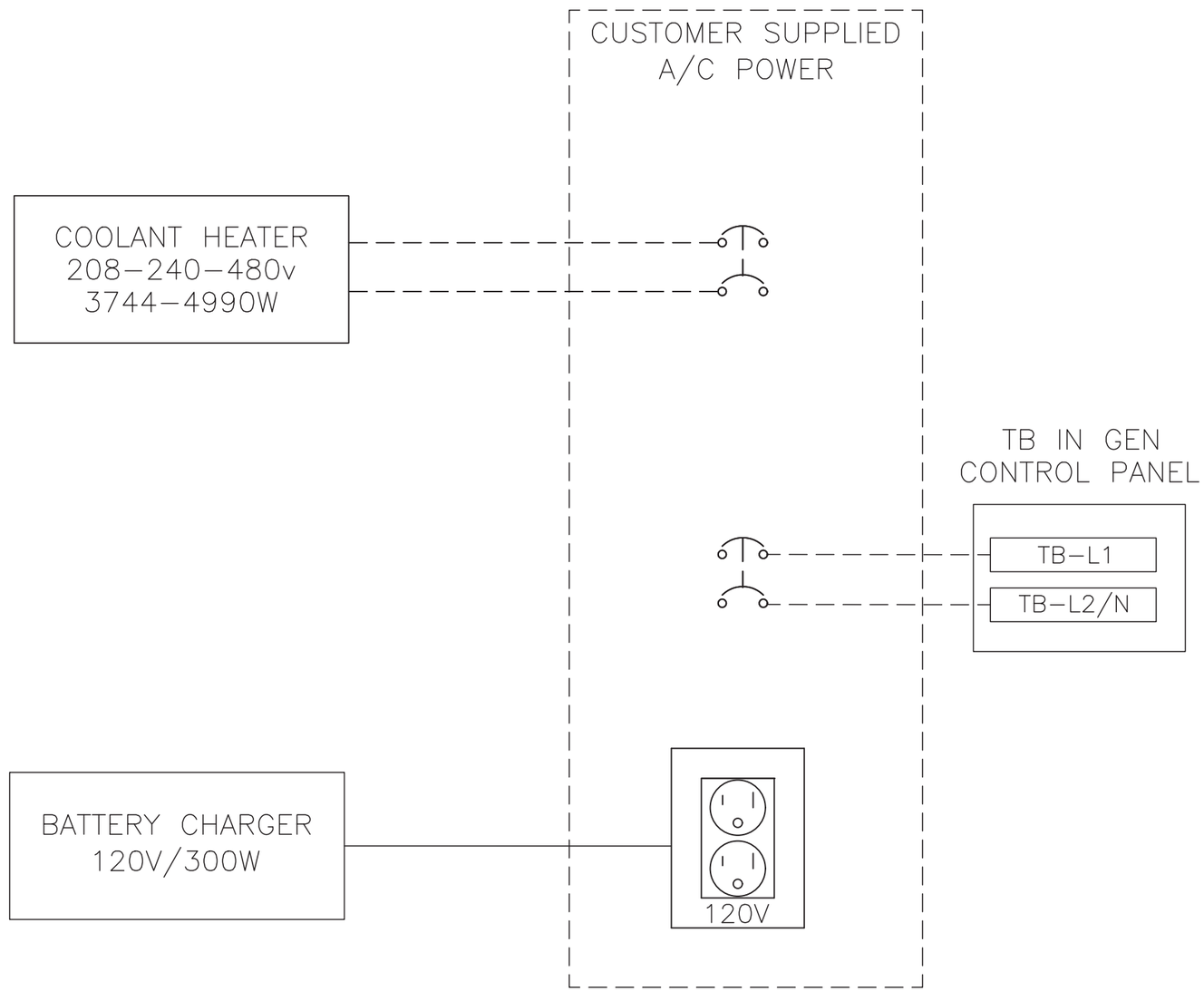


NOTES:
1. FOLLOW REGIONAL REGULATIONS AND APPLICABLE ELECTRIC CODES FOR INSTALLATION.
2. INSTALLER TO PROVIDE BRANCH CIRCUITS TO POWER ALL ACCESSORIES.
3. OUTLETS SHOWN FOR REFERENCE ONLY. ALL OUTLETS AND ASSOCIATED DASHED WIRING ARE THE RESPONSIBILITY OF THE INSTALLER.

PREP. BY: JPK 8/6/2025

CSSNA POWER GEN

TITLE: CENTUM S17 AC LOAD TABLE

SIZE: B | DWG NO: – | REV 0

SCALE: | DO NOT SCALE PRINT | SHEET 1 OF 1

# SECTION 5

## Warranty

Power Generation

# Warranty Statement

## CENTUM™ Series Generator Set

English
Original Instructions

5-2025

A072R157 (Issue 3)

# Limited Warranty

## CENTUM™ Series Generator Set

This limited warranty applies to all Cummins Inc. branded CENTUM™ Series generator sets and associated accessories (hereinafter referred to as "Product").

This warranty covers any failures of the Product, under normal use and service, which result from a defect in material or factory workmanship.

## Warranty Period:

The warranty start date† is the date of initial start up, first rental, demonstration or 18 months after factory ship date, whichever is sooner. See table for details.

**Continuous Power (COP)** is defined as being the maximum power which the generating set is capable of delivering continuously whilst supplying a constant electrical load when operated for an unlimited number of hours per year. No overload capability is available for this rating.

**Prime Power (PRP)** is defined as being the maximum power which a generating set is capable of delivering continuously whilst supplying a variable electrical load when operated for an unlimited number of hours per year. The permissible average power output over 24 hours of operation shall not exceed 70% of the PRP. For applications requiring permissible average output higher than stated, a COP rating should be used.

**Limited-Time Running Power (LTP)** is defined as the maximum power available, under the agreed operating conditions, for which the generating set is capable of delivering for up to 500 hours of operation per year.

**Emergency Standby Power (ESP)** is defined as the maximum power available during a variable electrical power sequence, under the stated operating conditions, for which a generating set is capable of delivering in the event of a utility power outage or under test conditions for up to 3 years or 1,000 hours, whichever occurs first. The permissible average power output over 24 hours of operation shall not exceed 70% of the ESP.

**Environmental Protection Agency – Stationary Emergency (EPA-SE)** is defined as being the maximum power available during a variable electrical power sequence, under the stated operating conditions, for which a generator set is capable of delivering in the event of a utility power outage or under test conditions and used in strict accordance with the EPA NSPS for stationary engines, 40 CFR part 60, subparts IIII and JJJJ, where a reliable utility must be present. The permissible average power output over 24 hours of operation shall not exceed 70% of the EPA-SE.

**Data Center Continuous (DCC)** is defined as the maximum power which the generator is capable of delivering continuously to a constant or varying electrical load for unlimited hours in a data center application.

**Base Warranty Coverage Duration (Whichever occurs first)**

| Rating | Months | Max. Hours |
|---|---|---|
| COP | 12 | Unlimited |
| PRP | 12 | Unlimited |
| LTP | 12 | 500 hrs |
| ESP | 36 | 1000 hrs |
| EPA-SE | 24 | Unlimited |
| DCC | 24 | Unlimited |

† Warranty start date for designated rental and oil and gas model Products is determined to be date of receipt of Product by the end customer.

## Cummins Inc. Responsibilities:

In the event of a failure of the Product during the warranty period due to defects in material or workmanship, Cummins Inc. will only be responsible for the following costs:

- All parts and labor required to repair the Product.
- Reasonable travel expenses to and from the Product site location.
- Maintenance items that are contaminated or damaged by a warrantable failure.

## Owner Responsibilities:

The owner will be responsible for the following:

- Notifying Cummins Inc., its distributors or dealers within 30 days of the discovery of failure.
- Installing, operating, commissioning and maintaining the Product in accordance with Cummins Inc.'s published policies and guidelines.
- Providing evidence for date of commissioning.


Copyright © 2025 Cummins Inc.

- Providing sufficient access to and reasonable ability to remove the Product from the installation in the event of a warrantable failure.
- Incremental costs and expenses associated with Product removal and reinstallation resulting from non-standard installations.
- Costs associated with rental of generating sets used to replace the Product being repaired.
- Costs associated with labor overtime and premium shipping requested by the owner.
- All downtime expenses, fines, all applicable taxes, and other losses resulting from a warrantable failure.

## Limitations:

This limited warranty does not cover Product failures resulting from:

- Inappropriate use relative to designated power rating.
- Inappropriate use relative to application guidelines.
- Inappropriate use of an EPA-SE application generator set relative to EPA's standards.
- Normal wear and tear.
- Improper and/or unauthorized installation.
- Negligence, accidents or misuse.
- Lack of maintenance or unauthorized repair.
- Noncompliance with any Cummins Inc. published guideline or policy.
- Use of improper or contaminated fuels, coolants or lubricants.
- Improper storage before and after commissioning.
- Owner's delay in making Product available after notification of potential Product problem.
- Replacement parts and accessories not authorized by Cummins Inc.
- Use of Battle Short Mode.
- Owner or operator abuse or neglect such as: operation without adequate coolant or lubricants; overfueling; overspeeding; lack of maintenance to lubricating, cooling or air intake systems; late servicing and maintenance; improper storage, starting, warm-up, run-in or shutdown practices, or for progressive damage resulting from a defective shutdown or warning device.
- Damage to parts, fixtures, housings, attachments and accessory items that are not part of the generating set.

This limited warranty does not cover costs resulting from:

- Difficulty in gaining access to the Product.
- Damage to customer property.

A "Data center" is defined as a dedicated facility that house computers and associated equipment for data storage and data handling.

Reliable utility is defined as utility power without routine or regularly scheduled black-outs.

Please contact your local Cummins Inc. Distributor for clarification concerning these limitations.

**CUMMINS INC. RIGHT TO FAILED COMPONENTS:**

Failed components claimed under warranty remain the property of Cummins Inc. Cummins Inc. has the right to reclaim any failed component that has been replaced under warranty.

## Extended Warranty:

Cummins Inc. offers several levels of Extended Warranty Coverage. Please contact your local Cummins Inc. Distributor for details.

power.cummins.com

**THE WARRANTIES SET FORTH HEREIN ARE THE SOLE WARRANTIES MADE BY CUMMINS INC. IN REGARD TO THE PRODUCT. CUMMINS INC. MAKES NO OTHER WARRANTIES, EXPRESS OR IMPLIED, OR OF MERCHANTABILITY OR FITNESS FOR A PARTICULAR PURPOSE.**

**IN NO EVENT IS CUMMINS INC. LIABLE FOR INCIDENTAL OR CONSEQUENTIAL DAMAGES.**

This limited warranty shall be enforced to the maximum extent permitted by applicable law. In the United States, some states do not allow limitations on how long an implied warranty lasts or the exclusion or limitation of incidental or consequential damages, so the above limitation or exclusion may not apply to you. This warranty gives you specific legal rights, and you may have other rights which vary from state to state or jurisdiction to jurisdiction.

Product Model Number:_____
Product Serial Number:_____
Date in Service:_____


Copyright © 2025 Cummins Inc.