GILLETTE GENERATORS

LIQUID COOLED NAT. GAS ENGINE GENERATOR SET

60 HZ MODEL

SP-5000

Model		STANDBY 120°C RISE	
	HZ	LPG	N.G.
SP-5000-60 HERTZ	60	300	500

All generator sets are USA prototype built and thoroughly tested. Production models are USA factory built and 100% load tested.

UL2200, UL1446, UL508, UL142, UL498

NFPA 110, 99, 70, 37
All generator sets meet NFPA-110 Level 1, when equipped with the necessary accessories and installed per NFPA standards.

NEC 700, 701, 702, 708

NEMA ICS10, MG1, ICS6, AB1

ANSI C62.41, 27, 59, 32, 480, 40Q, 81U, 360-05

ASCE 7-22
All generator sets meet 200 MPH rating.

EPA 40CFR Part 60, 1048, 1054, 1065, 1068

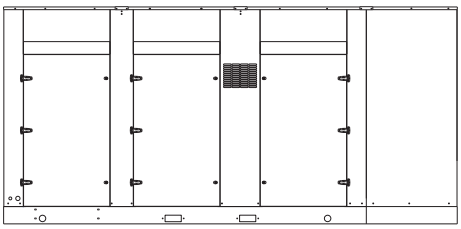

"LEVEL 2" HOUSED GEN-SET
Full aluminum weather protection and superior sound attenuation for specific low noise applications. Critical grade muffler is standard.

GENERATOR RATINGS					LIQUID PROPANE GAS FUEL		NATURAL GAS FUEL	
GENERATOR MODEL	VOLTAGE		PH	HZ	120°C RISE STANDBY RATING		120°C RISE STANDBY RATING	
	L-N	L-L			KW/KVA	AMP	KW/KVA	AMP
SP-5000-3-2	120	208	3	60	300/400	1042	500/625	1736
SP-5000-3-3	120	240	3	60	300/400	903	500/625	1505
SP-5000-3-4	277	480	3	60	300/400	451	500/625	752
SP-5000-3-5	127	220	3	60	300/400	985	500/625	1642
SP-5000-3-16	346	600	3	60	300/400	361	500/625	602

RATINGS: All three phase gen-sets are 12 lead windings, rated at .8 power factor. 120°C "STANDBY RATINGS" are strictly for gen-sets that are used for back-up emergency power to a failed normal utility power source. This standby rating allows varying loads, with no overload capability, for the entire duration of utility power outage. All gen-set power ratings are based on temperature rise measured by resistance method as defined by MIL-STD 705C and IEEE STD 115, METHOD 6.4.4. All generators have class H (180°C) insulation system on both rotor and stator windings. All factory tests and KW/KVA charts shown above are based on 120°C (standby) R/R winding temperature, within a maximum 40°C ambient condition. Generators operated at standby power ratings must not exceed the temperature rise limitation for class H insulation system, as specified in NEMA MG1-22.40. Specifications & ratings are subject to change without prior notice.

APPLICATION AND ENGINEERING DATA FOR MODEL SP-5000-60 HZ

GENERATOR SPECIFICATIONS

Manufacturer..... Stamford Electric Generators
Model & Type.....HCI534E-311, 4 Pole, 12 Lead, Three Phase
..... HCI534D-311, 4 Pole, 12 Lead, 480V, Three Phase
..... HCI534D-17, 4 Pole, 6 Lead, 600V, Three Phase
Exciter..... Brushless, shunt excited
Voltage Regulator.....Solid State, HZ/Volts
Voltage Regulation ..... ½%, No load to full load
Frequency ..... Field convertible, 60 HZ to 50 HZ
Frequency Regulation..... ½% (½ cycle, no load to full load)
Unbalanced Load Capability .....100% of standby amps
Total Stator and Load Insulation ..... Class H, 180°C
Temperature Rise.....120°C R/R, standby rating @ 40°C amb.
3 Ø Motor Starting @ 30% Voltage Dip (208-240V) .. 1340 kVA
3 Ø Motor Starting @ 30% Voltage Dip (480V)..... 1750 kVA
3 Ø Motor Starting @ 30% Voltage Dip (600V)..... 1520 kVA
Bearing.....1, Pre-lubed and sealed
Coupling ..... Direct flexible disc
Total Harmonic Distortion.....Max 3 | % (MIL-STD705B)
Telephone Interference Factor.....Max 50 (NEMA MG1-22)
Deviation Factor .....Max 5% (MIL-STD 405B)
Ltd. Warranty Period .....24 Months from date of start-up or
..... 1000 hours use, first to occur.

GENERATOR FEATURES

- World Renown Stamford Electric Generator having UL-1446 certification on full amortisseur windings.
- Full generator protection with **Deep Sea 7420** controller, having UL-508 certification.
- Automatic voltage regulator with over-excitation, under-frequency compensation, under-speed protection, and EMI filtering. Entire solid-state board is encapsulated for moisture protection.
- Generator power ratings are based on temperature rise, measured by resistance method, as defined in MIL-STD 705C and IEEE STD 115, Method 6.4.4.
- Power ratings will not exceed temperature rise limitation for class H insulation as per NEMA MG1-22.40.
- Insulation resistance to ground, exceeds 1.5 meg-ohm.
- Stator receives 2000 V. hi-potential test on main windings, and rotor windings receive a 1500 V. hi-potential test, as per MIL-STD 705B.
- Complete engine-generator torsional acceptance, confirmed during initial prototype testing.
- Full load testing on all engine-generator sets, before shipping.
- Self ventilating and drip-proof & revolving field design

ENGINE SPECIFICATIONS AND APPLICATIONS DATA

ENGINE

Manufacturer..... Power Solutions Inc. (PSI)
Model and Type..... Heavy Duty, 21.9LTCAC HO, 4 cycle
Aspiration ..... Turbocharged & Charge Air Cooled
Cylinder Arrangement ..... 12 Cylinders, Vee
Displacement Cu. In. (Liters) 1336 (21.9)
Bore & Stroke In. (Cm.) ..... 5.0 x 5.6 (128 x 142)
Compression Ratio.....10.5:1
Main Bearings & Style .....14, Precision Half-Shell
Cylinder Head..... Cast Iron
Pistons.....Cast Aluminum
Crankshaft.....Forged Steel
Exhaust Valve..... Inconel, A193
Governor .....Electronic
Frequency Reg. (no load-full load).....Isochronous
Frequency Reg. (steady state).....± 1/4%
Air Cleaner..... Dry, Replaceable Cartridge
Engine Speed 1800
Piston Speed, ft/min (m./min)…… ..1677 (510)
Max Power, bhp (kwm) Standby/LPG 472 (352)
Max Power, bhp (kwm) Standby/NG 764 (570)
Ltd. Warranty Period ..... 12 Months or 2000 hrs., first to occur

FUEL SYSTEM

Type ..... LPG or NAT. GAS, Vapor Withdrawal
Fuel Pressure (kpa), in. H_2O* ..... (2.74 -3.48), 11”-14”
Secondary Fuel Regulator.....NG or LPG Vapor System
Auto Fuel Lock-Off Solenoid.....Standard on all sets
Fuel Supply Inlet Line .....(2) 2” NPTF

FUEL CONSUMPTION

LP GAS: FT^3/HR (M^3/HR)	STANDBY
100% LOAD	1601 (45.3)
75% LOAD	1201 (34.0)
50% LOAD	809 (22.9)
LPG = 2500 BTU X FT^3/HR = Total BTU/HR LPG Conversion: 8.50 FT^3 = 1 LB. : 36.4 FT^3 = 1 GAL.	

NAT. GAS: FT^3/HR (M^3/HR)	STANDBY
100% LOAD	5346 (151)
75% LOAD	4350 (123.2)
50% LOAD	3300 (93.4)
NG = 1000 BTU X FT^3/HR = Total BTU/HR	

OIL SYSTEM

Type .....Full Pressure
Oil Pan Capacity qt. (L) 42.3 (40.0)
Oil Pan Cap. W/ filter qt. (L) 49.1 (47.1)
Oil Filter.....2, Replaceable Spin-On

ELECTRICAL SYSTEM

Ignition System .....Electronic
Eng. Alternator/Starter: 24 VDC, negative ground, 45 amp/hr.

Recommended battery to -18°C (0° F): ...(2) 12 VDC, BCI# 31, Max. Dimensions: 14”lg x 6 3/4” wi x 10” hi, with standard round posts. Min output 1000 CCA. Battery tray (max. dim. at 15”lg x 7”wi). This model has (2) battery trays, (2) hold down straps, (2) sets of battery cables, and (1) battery charger. Installation of (2) 12VDC starting batteries connected in series for 24VDC output is required, with possible higher AMP/HR rating, as described above, if the normal environment temperature averages -13° F (-25°C) or cooler.

APPLICATION AND ENGINEERING DATA FOR MODEL SP-5000-60 HZ

COOLING SYSTEM

Type of System.....Pressurized, closed recovery
Coolant Pump ..... Pre-lubricated, self-sealing
Cooling Fan Type (no. of blades).....Pusher (8)
Fan Diameter inches (mm) ..... 52" (1321)
Ambient Capacity of Radiator °F (°C).....125 (51.6)
Engine Jacket Coolant Capacity Gal (L) 14 (53.0)
Radiator Coolant Capacity Gal. (L).....50 (189)
Maximum Restriction of Cooling Air Intake
and discharge side of radiator in. H_20 (kpa) ..... 0.5 (.125)
Water Pump Capacity gpm (L/min) 174 (660)
Heat Reject Coolant: Btu/min (kw)..... .....25,760 (453)
Low Radiator Coolant Level Shutdown……...Standard
Note: Coolant temp. shut-down switch setting at 230°F (110°C) with 50/50 (water/antifreeze) mix.

AIR REQUIREMENTS

Combustion Air, cfm (m^3/min) 1027 (29.1)

Radiator Air Flow cfm (m^3/min) 39,995 (1133)
Heat Rejected to Ambient:
Engine: kw (btu/min)..... .....66 (3765)
Alternator: kw (btu/min) 27 (1580)

EXHAUST SYSTEM

Exhaust Outlet Size ..... (2) 5"
Max. Back Pressure, in. hg (KPA). 3.0 (10.2)
Exhaust Flow, at rated kw: cfm (m^3/min)..... .....……3179 (89.8)
Exhaust Temp., at rated kw: °F (ºC) ……..….1382 (750)
Engines are EPA certified for Natural Gas.

SOUND LEVELS MEASURED IN dB(A)

	Open Set	Level 2 Encl.
Level 2, Critical Silencer	97	82
Level 3, Hospital Silencer		76

Note: Open sets (no enclosure) has (2) optional silencer system choices due to unknown job-site applications. Level 2 enclosure has installed critical silencer with upgrade to hospital silencer. Sound tests are averaged from several test points and taken at 23 ft. (7 m) from source of noise at normal operation.

DERATE GENERATOR FOR ALTITUDE

3% per 1000 ft.(305m) above 3000 ft. (914m) from sea level

DERATE GENERATOR FOR TEMPERATURE

2% per 10°F(5.6°C) above 104°F (40°C)

DIMENSIONS AND WEIGHTS

	Open Set	Level 2 Enclosure
Length in (cm)	168 (427)	216 (548)
Width in (cm)	82 (208)	82 (208)
Height in (cm)	92 (234)	100 (254)
3 Ø Net Weight lbs (kg)	10225 (4638)	12725 (5772)
3 Ø Ship Weight lbs (kg)	10625 (4820)	13125 (5954)

DEEP SEA 7420 DIGITAL MICROPROCESSOR CONTROLLER

DEEP SEA 7420

The 7420 controller is an auto start mains (utility) failure module for single gen-set applications. This controller includes a backlit LCD display which continuously displays the status of the engine and generator at all times.

The 7420 controller will also monitor speed, frequency, voltage, current, oil pressure, coolant temp., and fuel levels. These modules have been designed to display warning and shut down status. It also includes: (11) configurable inputs • (8) configurable outputs • voltage monitoring • mains (utility) failure detection. • (250) event logs • configurable timers • automatic shutdown or warning during fault detection • remote start (on load) • engine preheat • advanced metering capability • hour meter • text LCD displays • protected solid state outputs • test buttons for: stop/reset • manual mode • auto mode • lamp test • start button • power monitoring (kWh, kVAr, kVAh, kVArh) This controller includes expansion features including RS232, RS484 (using MODBUS-RTU/TCP), direct USB connection with PC, expansion optioned using DSENet for remote annunciation and remote relay interfacing for a distance of up to 3300FT. The controller software is freely downloadable from the internet and allows monitoring with direct USB cable, LAN, or by internet via the built in web interface.

LOW LOAD CONDITIONS: Operation of PSI HD engines at low-load conditions should be limited to no more than one (1) hour per twenty-four (24) hour period. If the application requires extended time at light loads, it is recommended that the engine load be increased to at least 70% of mechanical rating for a minimum of two (2) hours per fifty (50) hours of low-load operation. Piston sealing rings rely on adequate cylinder firing pressure and temperature to seal the combustion chamber and prevent excessive engine oil from entering the power cylinder. Under low loads these rings will not seal properly, resulting in oil being burned in the combustion chamber and carbon deposits on pistons and valves. This mechanism is well-documented in reciprocating engines of all fuel types and is often referred to as "wet-stacking."

STANDARD FEATURES FOR MODEL SP-5000-60 HZ

STANDARD FEATURES

CONTROL PANEL:

Deep Sea 7420 digital microprocessor with logic allows programming in the field. Controller has:

- STOP-MANUAL-AUTO modes and automatic engine shutdowns, signaled by full text LCD indicators:
- Low oil pressure
- High engine temp
- Low Radiator Level
- Three auxiliary alarms
- Battery fail alarm
- Engine fail to start
- Engine over speed
- Engine under speed
- Over & under voltage

Also included is tamper-proof engine hour meter

ENGINE:

Full flow oil filter • Air filter • Oil pump • Solenoid type starter motor • Hi-temp radiator • Jacket water pump • Thermostat • Pusher fan and guard • Exhaust manifold • 24 VDC battery charging alternator • Flexible exhaust connector • "Isochronous" duty, electronic governor • Secondary dry fuel regulator • Dry fuel lock-off solenoid • Vibration isolators • Closed coolant recovery system with 50/50 water to anti-freeze mixture • flexible oil & radiator drain hose.

Design & specifications subject to change without prior notice. Dimensions shown are approximate. Contact Gillette for certified drawings. DO NOT USE DIMENSIONS FOR INSTALLATION PURPOSES.

AC GENERATOR SYSTEM:

AC generator • Shunt excited • Brushless design • Circuit Breaker installed and wired to gen-set • Direct connection to engine with flex disc • Class H, 180°C insulation • Self ventilated • Drip proof construction • UL Certified

VOLTAGE REGULATOR:

½% Voltage regulation • EMI filter • Under-speed protection • Over-excitation protection • total encapsulation

DC ELECTRICAL SYSTEM:

Battery tray • Battery cables • Battery hold down straps • 2-stage battery float charger with maintaining & recharging automatic charge stages

WEATHER/SOUND PROOF ALUMINUM HOUSING CORROSION RESISTANT PROTECTION CONSISTING OF:

- 9 Heated and Agitated Wash Stages
- Zinc Phosphate Etching-coating Stage
- Final Baked On Enamel Powder Coat
- 18/8 Stainless Steel Hardware

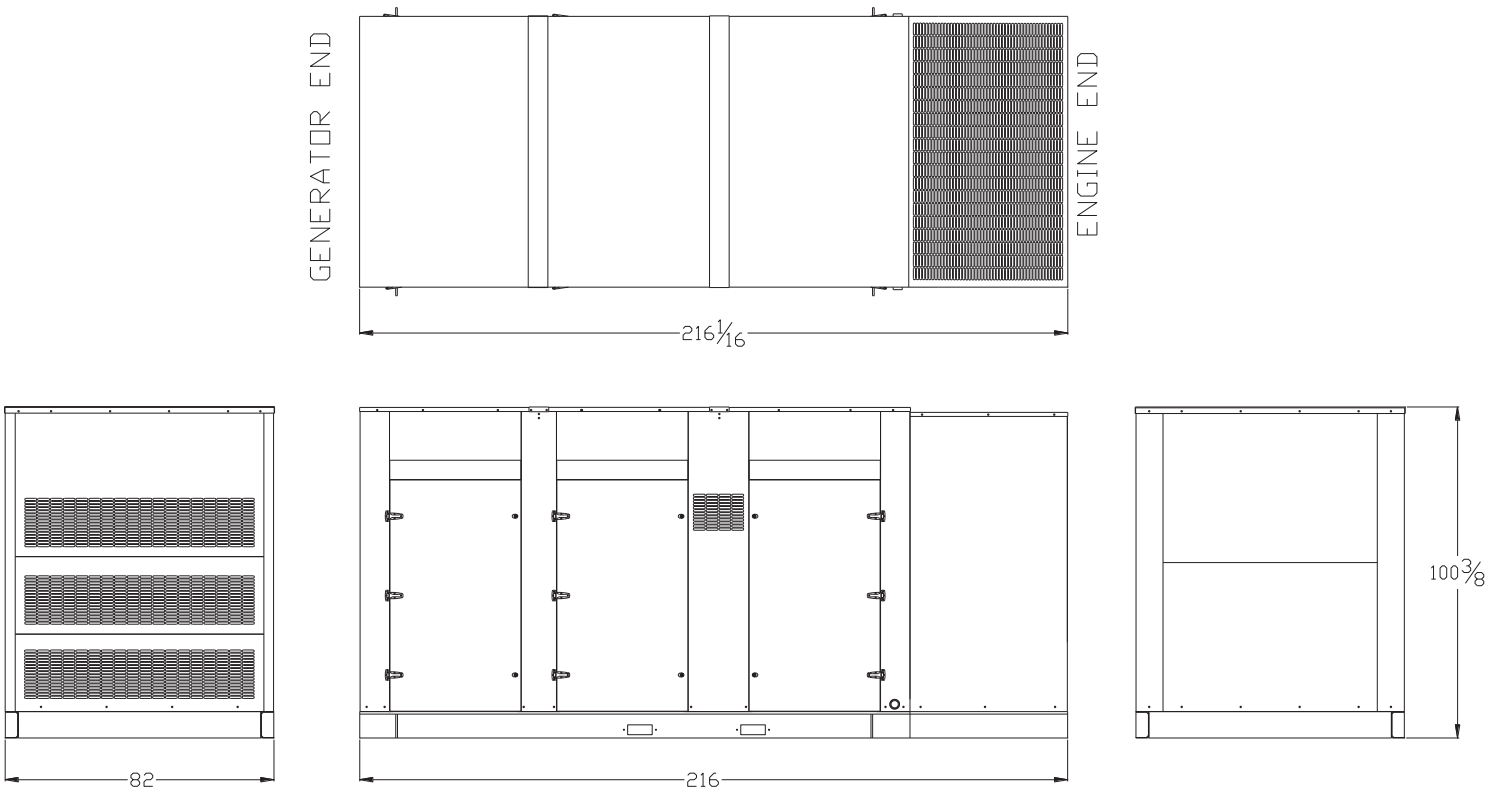

PSI HEAVY-DUTY

21.9 L ENGINE

INDUSTRIAL STATIONARY

Product Overview

The PSI HD 21.9 L is a U.S. EPA-certified natural gas and propane engine developed from the block up to be a reliable and durable power unit. Built upon a proven marine-diesel grade block, the 12-cylinder in-line, turbocharged and after-cooled engine features replaceable wet liners and water-cooled exhaust.

Superior engine performance is provided by an ECU that integrates and coordinates all critical functions including: Governor, Variable Ignition Timing, Air Fuel Ratio Control, Knock Suppression and Engine Protection.

The PSI HD product lineup has six models with displacements of 8.1 L, 11.1 L, 14.6 L, 18.3 L and 21.9 L. These engines are an extension of the PSI product line, which is based upon blocks from 650cc to 8.8L. All PSI engines feature the same fuel systems and controls, simplifying your application development and support.

FEATURES

- U.S. EPA-Certified and CARB-Compliant
- Dual Fuel with Automatic Change-Over
- 50C Ambient Cooling Capacity
- 3-Way Catalytic Converter
- Air Filtration
- UL2200-Compliant or Listed Components
- MasterTrak Telematics service (included for 1 year)

MAXIMUM PERFORMANCE
NO COMPROMISES

POWER & PERFORMANCE • EMISSION-CERTIFIED • FUEL-FLEXIBLE

HEAVY-DUTY

21.9L ENGINE
ENGINEERING DATA

21.9 L Industrial Stationary Engine

Displacement	1,338 cid	21,930 cc
Compression Ratio	10.5:1	
Bore & Stroke	5.04 in x 5.59 in	128 mm x 142 mm
kWe	430 @ 1,800 rpm (Natural Gas)	350 @ 1,500 rpm (Natural Gas)
Emission-Certified	EPA, CARB – Industrial Stationary	
Fuel Types	Natural Gas / Propane	

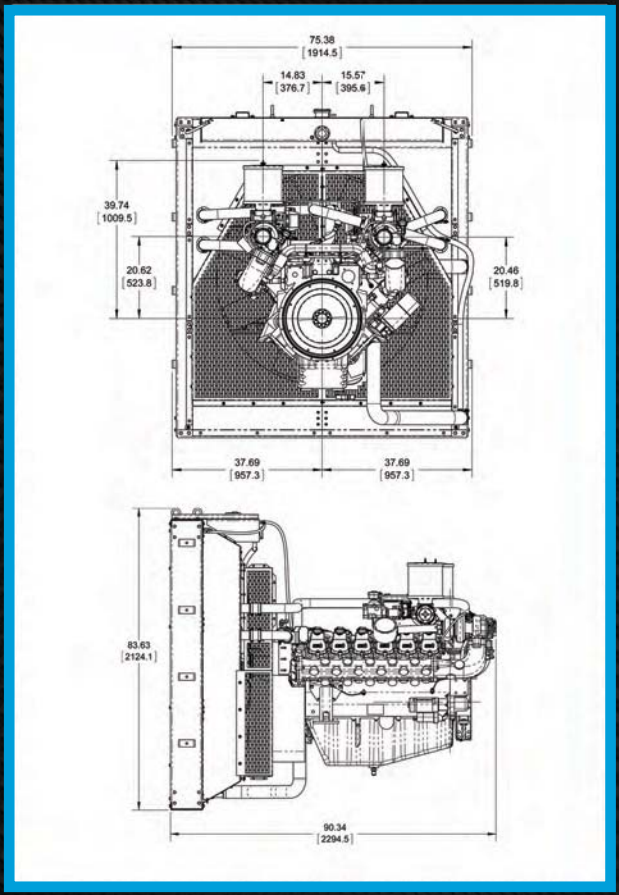

GENERAL DATA

- Water-cooled, turbo-charged, air-to-air inter-cooled, stoichiometric, replaceable wet cylinder liners
- Cast iron block & heads, 10.5:1 compression ratio, overhead valve/2V configuration
- Crankshaft gear-driven oil system with cartridge-type filter, belt-driven centrifugal water pump
- Full ECU engine control including: coil-on-plug variable timing ignition, electronic governor and fuel-air ratio control
- Engine protection for oil pressure, coolant level, coolant temperature, fuel pressure, over-speed
- Complete fuel system for single fuel (NG/LP) operation with closed-loop control
- Alternator (45A/24VDC)
- Starter (24VDC)
- CANBUS J1939 interface

Power shown is gross engine power and has been corrected to SAE J1995. Actual installed power levels may vary depending on the application and OEM supplied components.

Information may vary with application. All specifications listed are based on the latest product information available at the time of publication. The right is reserved to make changes at any time without notice.

201 Mittel Drive, Wood Dale, IL 60191
T: 630-350-9400 F: 630-350-9900
www.psiengines.com

21.9L

[Stoic.]	
561000xx	Rev: PRELIM

PSI ENERGY

General Engine Data[5]

Type	V-type 4 cycle			
Number of cylinders	12			
Aspiration	Turbo Charge Air Cooled			
Firing Order	1-12-5-8-3-10-6-7-2-11-4-9			
Rotation Viewed from Flywheel	Counter Clockwise			
Bore	in	mm	5.0	128
Stroke	in	mm	5.6	142
Displacement	in^3	L	1336	21.9
Compression Ratio	10.5			
Exhaust Manifold Type	Water Cooled Manifold			
Turbo Exhaust Outlet Pipe Size	in	mm	2.5	65
Catalyst Inlet Size	in	mm	3.5	89
Catalyst Dp	in-H_2O	kPa	33.4	8.3
Maximum Allowable Exhaust Back Pressure	in-Hg	kPa	3.0	10.2
Maximum Fuel System Pressure	psi	kPag	1.0	6.9
Maximum Operating pressure to EPR	in-H_2O	kPa	11.0	2.7
Minimum Operating pressure to EPR	in-H_2O	kPa	7.0	1.7
Minimum Gas Supply Pipe Size[5]	2 x 2" NPT			
Maximum Pressure Drop Across CAC	psi	kPa	1.5	10.5
Maximum Allowable Intake Restriction – Clean Air Filter	in-H_2O	kPa	5.0	1.2
Maximum Allowable Intake Restriction – Dirty Air Filter	in-H_2O	kPa	15.0	3.7
Spark Plug Part Number	IFR7F-4D			
Standard Spark Plug Gap[10]	in	mm	0.015	0.38
Spark Plug Coil - Primary Resistance	Ohms		0.59Ω ± 10%	
Battery Voltage	Volts		24	
Starter Motor Power	HP	kW	9.4	7.0

Flywheel housing	SAE No.1			
Flywheel	No. 14			
Dry Weight (Fan to Flywheel)	lb	kg	3630	1650
Wet Weight (Fan to Flywheel)	lb	kg	5227	2376
CG From Flywheel Housing Rear Face	in	mm	23.7	602
CG Above Crank Centerline	in	mm	7.2	182
Max Bending Moment @ Rear of Block	lb/ft	N m	8130	6000
Oil Specification	SAE 15W-40 Low Ash Gas engine oil (.25-.5% by wt), API CD/CF or higher			
Engine Oil Capacity[8] – Min	qts	L	35.0	33.0
Engine Oil Capacity[8] – Max	qts	L	42.4	40.0
ECU Oil Pressure Warning[6]	psi	kPa	30	207
ECU Oil Pressure Shut Down[6]	psi	kPa	25	172
Oil Pressure at 1000 rpm (Idle) – Min	psi	kPa	13	90
Oil Pressure at 1000 rpm (Idle) – Max	psi	kPa	44	300
Max Allowable Oil Temperature	°F	°C	250	121
Coolant Capacity (Engine only)	gal	L	11.6	44
Coolant Capacity (Radiator only)	gal	L	38.6	146
Radiator Weight (Dry)	lb	kg	1597	726
Standard Thermostat Range				
Normal Operation Temperature[9]	°F	°C	159.8	71
Full Open Temperature[9]	°F	°C	185	85
ECU Coolant Temp Warning	°F	°C	219.2	104
ECU Coolant Temp Shutdown	°F	°C	230	110
50°C Ambient Capable[11]	Pass			
Max External Coolant Friction Head	psi	kPa	6	40
CAC Rise Above Ambient Specified	°F	°C	48.2	9

Performance Data 60Hz[3,5]

Nominal Engine Speed	RPM		1800	
Mean Piston Speed	ft/min	m/s	1677	8.5
RPM Range (Min-Max) ISO 8528-5 G1	RPM		1778-1823	
Charging Alternator Voltage	Volts		24	
Charging Alternator Current	Amps		45	
Water Pump Speed	RPM		3056	
Total Engine Coolant Flow	gal/min	L/min	151	570
Cooling Fan Power[11]	HP	kW	42	31
Cooling Fan Speed	RPM		1440	
Cooling Fan Air Flow[11]	SCFM	m^3/min	39995	1133.0

Performance Data 50Hz[3,5]

Nominal Engine Speed	RPM		1500	
Mean Piston Speed	ft/min	m/s	1397	7
RPM Range (Min-Max) ISO 8528-5 G1	RPM		1481-1519	
Charging Alternator Voltage	Volts		24	
Charging Alternator Current	Amps		45	
Water Pump Speed	RPM		2547	
Total Engine Coolant Flow	gal/min	L/min	125	474
Cooling Fan Power[11]	HP	kW	24	18
Cooling Fan Speed	RPM		1200	
Cooling Fan Air Flow[11]	SCFM	m^3/min	34276	971

Standby			NG 60Hz HO		NG 60Hz		NG 50Hz		LP 60Hz		LP 50Hz	
Power Rating[1,2,3,4] Per ISO 3046	HP	kWm	764	570	684	510	507	378	472	352	370	276
MEP (@ rated Load on NG)	psi	bar	252	17.4	225	15.5	200	13.8	155	10.7	146	10.1
Fuel Consumption[3,4,7]	lb/hr	kg/hr	258	117	232	106	167	76	177	81	135	62
BSFC	lb/(hp-hr)	g/(kW-hr)	0.338	206	0.340	207	0.330	201	0.376	229	0.366	223
Turbine Outlet Temperature	°F	°C	1244	674	1136	614	1019	548	998	537	1018	548
Exhaust Mass Flow (entire engine)	lb/hr	kg/hr	4525	2057	4076	1853	2925	1329	2750	1250	2041	928
Exhaust Flow at Turbine Outlet Conditions	ACFM	m^3/min	2870	81	2426	69	1613	46	1494	42	1124	32
Air Induction System[5]												
Combustion Air required (entire engine)	lb/hr	kg/hr	4272	1942	3843	1747	2758	1254	2750	1250	2049	932
Combustion Air Volume Required (entire engine)	ACFM	m^3/min	884	25	795	23	571	16	569	16	424	12
Compressor Outlet Temperature[2]	°F	°C	395	202	362	183	282	139	279	137	231	110

[1] Standby and overload ratings based on ISO 3046 gross flywheel power.

[2] Technical data based on ISO 3046-1 standards of 77°F(25°C), absolute pressure 14.5Psia(100kPa) and 30% relative humidity.

[3] Production tolerances in engines and installed components can account for power variations of ± 5%. Altitude, temperature and excessive exhaust and intake restrictions should be applied to power calculations.

[4] All fuel and thermal calculations unless otherwise noted are done at ISO 3046 rated load using LHV for NG of 48.17 MJ/kg.

[5] All values in the following section are provided for informational purpose only and are non-binding.

[6] >1400RPM.

[7] See PSI Energy Technical Spec. 56300019 - Fuel Standard.

[8] Standard Sump Capacity.

[9] ± 2 degrees Celsius.

[10] ± 0.002" or 0.05mm.

[11] At 1" Static H2O Pressure and 125F @ radiator

21.9L

[Stoic.]	
561000xx	Rev: PRELIM

PSI ENERGY

General Engine Data[5]

Type	V-type 4 cycle			
Number of cylinders	12			
Aspiration	Turbo Charge Air Cooled			
Firing Order	1-12-5-8-3-10-6-7-2-11-4-9			
Rotation Viewed from Flywheel	Counter Clockwise			
Bore	in	mm	5.0	128
Stroke	in	mm	5.6	142
Displacement	in^3	L	1336	21.9
Compression Ratio	10.5			
Exhaust Manifold Type	Water Cooled Manifold			
Turbo Exhaust Outlet Pipe Size	in	mm	2.5	65
Catalyst Inlet Size	in	mm	3.5	89
Catalyst Dp	in-H_2O	kPa	33.4	8.3
Maximum Allowable Exhaust Back Pressure	in-Hg	kPa	3.0	10.2
Maximum Fuel System Pressure	psi	kPag	1.0	6.9
Maximum Operating pressure to EPR	in-H_2O	kPa	11.0	2.7
Minimum Operating pressure to EPR	in-H_2O	kPa	7.0	1.7
Minimum Gas Supply Pipe Size[5]	2 x 2" NPT			
Maximum Pressure Drop Across CAC	psi	kPa	1.5	10.5
Maximum Allowable Intake Restriction – Clean Air Filter	in-H_2O	kPa	5.0	1.2
Maximum Allowable Intake Restriction – Dirty Air Filter	in-H_2O	kPa	15.0	3.7
Spark Plug Part Number	IFR7F-4D			
Standard Spark Plug Gap[10]	in	mm	0.015	0.38
Spark Plug Coil - Primary Resistance	Ohms		0.59Ω ± 10%	
Battery Voltage	Volts		24	
Starter Motor Power	HP	kW	9.4	7.0

Flywheel housing	SAE No.1			
Flywheel	No. 14			
Dry Weight (Fan to Flywheel)	lb	kg	3630	1650
Wet Weight (Fan to Flywheel)	lb	kg	5227	2376
CG From Flywheel Housing Rear Face	in	mm	23.7	602
CG Above Crank Centerline	in	mm	7.2	182
Max Bending Moment @ Rear of Block	lb/ft	N m	8130	6000
Oil Specification	SAE 15W-40 Low Ash Gas engine oil (.25-.5% by wt), API CD/CF or higher			
Engine Oil Capacity[8] – Min	qts	L	35.0	33.0
Engine Oil Capacity[8] – Max	qts	L	42.4	40.0
ECU Oil Pressure Warning[6]	psi	kPa	30	207
ECU Oil Pressure Shut Down[6]	psi	kPa	25	172
Oil Pressure at 1000 rpm (Idle) – Min	psi	kPa	13	90
Oil Pressure at 1000 rpm (Idle) – Max	psi	kPa	44	300
Max Allowable Oil Temperature	°F	°C	250	121
Coolant Capacity (Engine only)	gal	L	11.6	44
Coolant Capacity (Radiator only)	gal	L	38.6	146
Radiator Weight (Dry)	lb	kg	1597	726
Standard Thermostat Range				
Normal Operation Temperature[9]	°F	°C	159.8	71
Full Open Temperature[9]	°F	°C	185	85
ECU Coolant Temp Warning	°F	°C	219.2	104
ECU Coolant Temp Shutdown	°F	°C	230	110
50°C Ambient Capable[11]	Pass			
Max External Coolant Friction Head	psi	kPa	6	40
CAC Rise Above Ambient Specified	°F	°C	48.2	9

Performance Data 60Hz[3,5]

Nominal Engine Speed	RPM		1800	
Mean Piston Speed	ft/min	m/s	1677	8.5
RPM Range (Min-Max) ISO 8528-5 G1	RPM		1778-1823	
Charging Alternator Voltage	Volts		24	
Charging Alternator Current	Amps		45	
Water Pump Speed	RPM		3056	
Total Engine Coolant Flow	gal/min	L/min	151	570
Cooling Fan Power[11]	HP	kW	42	31
Cooling Fan Speed	RPM		1440	
Cooling Fan Air Flow[11]	SCFM	m^3/min	39995	1133.0

Performance Data 50Hz[3,5]

Nominal Engine Speed	RPM		1500	
Mean Piston Speed	ft/min	m/s	1397	7
RPM Range (Min-Max) ISO 8528-5 G1	RPM		1481-1519	
Charging Alternator Voltage	Volts		24	
Charging Alternator Current	Amps		45	
Water Pump Speed	RPM		2547	
Total Engine Coolant Flow	gal/min	L/min	125	474
Cooling Fan Power[11]	HP	kW	24	18
Cooling Fan Speed	RPM		1200	
Cooling Fan Air Flow[11]	SCFM	m^3/min	34276	971

Prime			NG 60Hz		NG 50Hz		LP 60Hz		LP 50Hz	
Power Rating[1,2,3,4] Per ISO 3046	HP	kWm	582	434	456	340	401	299	333	248
MEP (@ rated Load on NG)	psi	bar	192	13.2	180	12.4	132	9.1	131	9.1
Fuel Consumption[3,4,7]	lb/hr	kg/hr	200	91	151	69	153	69	122	56
BSFC	lb/(hp-hr)	g/(kW-hr)	0.343	209	0.331	202	0.381	232	0.368	224
Turbine Outlet Temperature	°F	°C	1053	567	1005	541	1015	546	1016	547
Exhaust Mass Flow (entire engine)	lb/hr	kg/hr	3507	1594	2640	1200	2369	1077	1840	836
Exhaust Flow at Turbine Outlet Conditions	ACFM	m^3/min	1979	56	1442	41	1303	37	84	29
Air Induction System[5]										
Combustion Air required (entire engine)	lb/hr	kg/hr	3307	1503	2490	1132	2369	1077	1848	840
Combustion Air Volume Required (entire engine)	ACFM	m^3/min	684	19	515	15	490	14	383	11
Compressor Outlet Temperature[2]	°F	°C	319	160	261	127	249	121	215	102

[1] Standby and overload ratings based on ISO 3046 gross flywheel power.

[2] Technical data based on ISO 3046-1 standards of 77°F(25°C), absolute pressure 14.5Psia(100kPa) and 30% relative humidity.

[3] Production tolerances in engines and installed components can account for power variations of ± 5%. Altitude, temperature and excessive exhaust and intake restrictions should be applied to power calculations.

[4] All fuel and thermal calculations unless otherwise noted are done at ISO 3046 rated load using LHV for NG of 48.17 MJ/kg.

[5] All values in the following section are provided for informational purpose only and are non-binding.

[6] >1400RPM.

[7] See PSI Energy Technical Spec. 56300019 - Fuel Standard.

[8] Standard Sump Capacity.

[9] ± 2 degrees Celsius.

[10] ± 0.002" or 0.05mm.

[11] At 1" Static H2O Pressure and 125F @ radiator

STAMFORD®

HCI 534D/544D - Winding 311

Technical Data Sheet

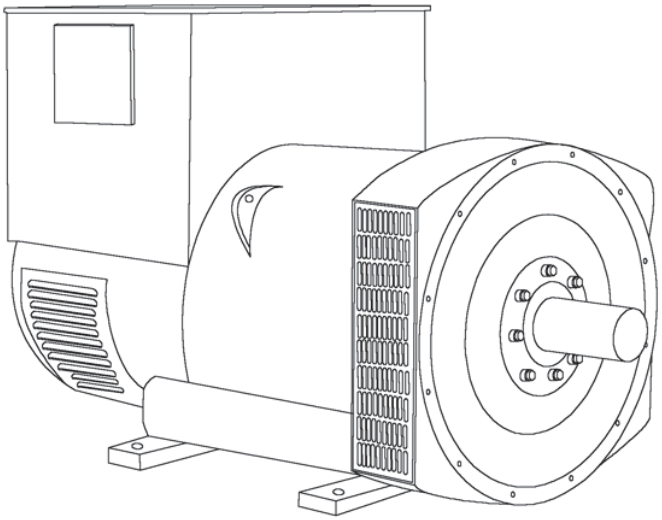

SPECIFICATIONS & OPTIONS

STANDARDS

Stamford industrial generators meet the requirements of BS EN 60034 and the relevant section of other international standards such as BS5000, VDE 0530, NEMA MG1-32, IEC34, CSA C22.2 100, AS1359.
Other standards and certifications can be considered on request.

VOLTAGE REGULATORS

AS440 AVR - STANDARD

With this self-excited system the main stator provides power via the Automatic Voltage Regulator (AVR) to the exciter stator. The high efficiency semi-conductors of the AVR ensure positive build-up from initial low levels of residual voltage.
The exciter rotor output is fed to the main rotor through a three-phase full-wave bridge rectifier. The rectifier is protected by a surge suppressor against surges caused, for example, by short circuit or out-of-phase paralleling.
The AS440 will support a range of electronic accessories, including a 'droop' Current Transformer (CT) to permit parallel operation with other ac generators.

MX341 AVR

This sophisticated AVR is incorporated into the Stamford Permanent Magnet Generator (PMG) control system.
The PMG provides power via the AVR to the main exciter, giving a source of constant excitation power independent of generator output. The main exciter output is then fed to the main rotor, through a full wave bridge, protected by a surge suppressor. The AVR has in-built protection against sustained over-excitation, caused by internal or external faults. This de-excites the machine after a minimum of 5 seconds.
An engine relief load acceptance feature can enable full load to be applied to the generator in a single step.
If three-phase sensing is required with the PMG system the MX321 AVR must be used.
We recommend three-phase sensing for applications with greatly unbalanced or highly non-linear loads.

MX321 AVR

The most sophisticated of all our AVRs combines all the features of the MX341 with, additionally, three-phase rms sensing, for improved regulation and performance.
Over voltage protection is built-in and short circuit current level adjustments is an optional facility.

WINDINGS & ELECTRICAL PERFORMANCE

All generator stators are wound to 2/3 pitch. This eliminates triplen (3rd, 9th, 15th …) harmonics on the voltage waveform and is found to be the optimum design for trouble-free supply of non-linear loads. The 2/3 pitch design avoids excessive neutral currents sometimes seen with higher winding pitches, when in parallel with the mains. A fully connected damper winding reduces oscillations during paralleling. This winding, with the 2/3 pitch and carefully selected pole and tooth designs, ensures very low waveform distortion.

TERMINALS & TERMINAL BOX

Standard generators are 3-phase reconnectable with 12 ends brought out to the terminals, which are mounted on a cover at the non-drive end of the generator. A sheet steel terminal box contains the AVR and provides ample space for the customers' wiring and gland arrangements. It has removable panels for easy access.

SHAFT & KEYS

All generator rotors are dynamically balanced to better than BS6861:Part 1 Grade 2.5 for minimum vibration in operation. Two bearing generators are balanced with a half key.

INSULATION/IMPREGNATION

The insulation system is class 'H'.
All wound components are impregnated with materials and processes designed specifically to provide the high build required for static windings and the high mechanical strength required for rotating components.

QUALITY ASSURANCE

Generators are manufactured using production procedures having a quality assurance level to BS EN ISO 9001.

The stated voltage regulation may not be maintained in the presence of certain radio transmitted signals. Any change in performance will fall within the limits of Criteria 'B' of EN 61000-6-2:2001. At no time will the steady-state voltage regulation exceed 2%.

DE RATES

All values tabulated on page 8 are subject to the following reductions

5% when air inlet filters are fitted.
3% for every 500 metres by which the operating altitude exceeds 1000 metres above mean sea level.
3% for every 5°C by which the operational ambient temperature exceeds 40°C.
Note: Requirement for operating in an ambient exceeding 60°C must be referred to the factory.

NB Continuous development of our products entitles us to change specification details without notice, therefore they must not be regarded as binding.

Front cover drawing typical of product range.

APPROVED DOCUMENT

HCI534D/544D

STAMFORD

WINDING 311

CONTROL SYSTEM	SEPARATELY EXCITED BY P.M.G.		
A.V.R.	MX321	MX341	
VOLTAGE REGULATION	± 0.5 %	± 1.0 %	With 4% ENGINE GOVERNING
SUSTAINED SHORT CIRCUIT	REFER TO SHORT CIRCUIT DECREMENT CURVES (page 7)		

CONTROL SYSTEM	SELF EXCITED	
A.V.R.	AS440	
VOLTAGE REGULATION	± 1.0 %	With 4% ENGINE GOVERNING
SUSTAINED SHORT CIRCUIT	SERIES 4 CONTROL DOES NOT SUSTAIN A SHORT CIRCUIT CURRENT	

INSULATION SYSTEM	CLASS H	
PROTECTION	IP23	
RATED POWER FACTOR	0.8	
STATOR WINDING	DOUBLE LAYER LAP	
WINDING PITCH	TWO THIRDS	
WINDING LEADS	12	
STATOR WDG. RESISTANCE	0.0049 Ohms PER PHASE AT 22°C SERIES STAR CONNECTED	
ROTOR WDG. RESISTANCE	1.77 Ohms at 22°C	
EXCITER STATOR RESISTANCE	17 Ohms at 22°C	
EXCITER ROTOR RESISTANCE	0.092 Ohms PER PHASE AT 22°C	
R.F.I. SUPPRESSION	BS EN 61000-6-2 & BS EN 61000-6-4,VDE 0875G, VDE 0875N. refer to factory for others	
WAVEFORM DISTORTION	NO LOAD < 1.5% NON-DISTORTING BALANCED LINEAR LOAD < 5.0%	
MAXIMUM OVERSPEED	2250 Rev/Min	
BEARING DRIVE END	BALL. 6220 (ISO)	
BEARING NON-DRIVE END	BALL. 6314 (ISO)	
	1 BEARING	2 BEARING
WEIGHT COMP. GENERATOR	1393 kg	1395 kg
WEIGHT WOUND STATOR	657 kg	657 kg
WEIGHT WOUND ROTOR	563 kg	535 kg
WR² INERTIA	8.0068 kgm^2	7.7289 kgm^2
SHIPPING WEIGHTS in a crate	1485 kg	1485 kg
PACKING CRATE SIZE	166 x 87 x 124(cm)	166 x 87 x 124(cm)
	50 Hz	60 Hz
TELEPHONE INTERFERENCE	THF<2%	TIF<50
COOLING AIR	1.035 m³/sec 2202 cfm	1.312 m³/sec 2780 cfm

VOLTAGE SERIES STAR	380/220	400/231	415/240	440/254	416/240	440/254	460/266	480/277
VOLTAGE PARALLEL STAR	190/110	200/115	208/120	220/127	208/120	220/127	230/133	240/138
VOLTAGE SERIES DELTA	220/110	230/115	240/120	254/127	240/120	254/127	266/133	277/138
kVA BASE RATING FOR REACTANCE VALUES	500	550	500	500	575	594	625	644
Xd DIR. AXIS SYNCHRONOUS	3.02	2.99	2.53	2.25	3.52	3.25	3.13	2.96
X'd DIR. AXIS TRANSIENT	0.16	0.15	0.13	0.12	0.17	0.16	0.15	0.14
X''d DIR. AXIS SUBTRANSIENT	0.11	0.11	0.09	0.08	0.12	0.11	0.11	0.10
Xq QUAD. AXIS REACTANCE	2.48	2.46	2.08	1.85	2.87	2.65	2.55	2.41
X''q QUAD. AXIS SUBTRANSIENT	0.27	0.28	0.23	0.20	0.31	0.29	0.28	0.26
X_L LEAKAGE REACTANCE	0.05	0.04	0.04	0.04	0.06	0.06	0.05	0.05
X_2 NEGATIVE SEQUENCE	0.19	0.19	0.16	0.14	0.22	0.20	0.20	0.19
X_0 ZERO SEQUENCE	0.10	0.10	0.08	0.07	0.10	0.09	0.09	0.08
REACTANCES ARE SATURATED	VALUES ARE PER UNIT AT RATING AND VOLTAGE INDICATED							

T'd TRANSIENT TIME CONST.	0.08s
T''d SUB-TRANSTIME CONST.	0.012s
T'do O.C. FIELD TIME CONST.	2.2s
Ta ARMATURE TIME CONST.	0.018s
SHORT CIRCUIT RATIO	1/Xd

APPROVED DOCUMENT

50 Hz

HCI534D/544D

Winding 311

STAMFORD

THREE PHASE EFFICIENCY CURVES

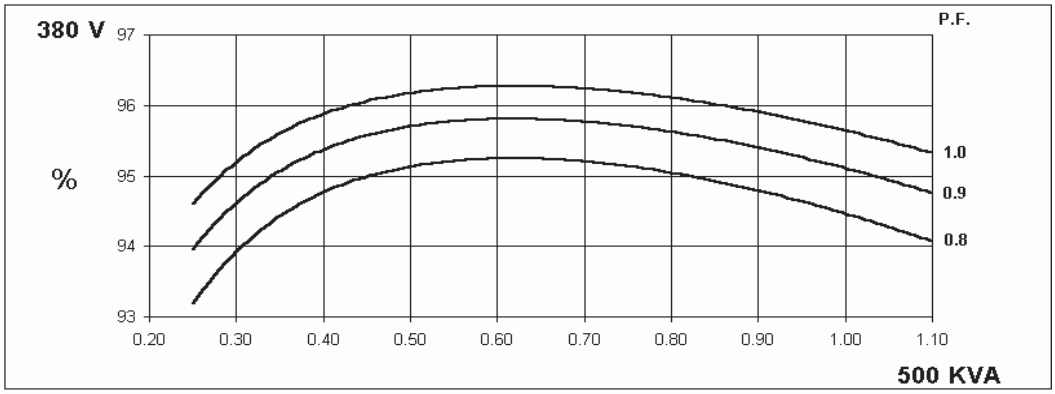

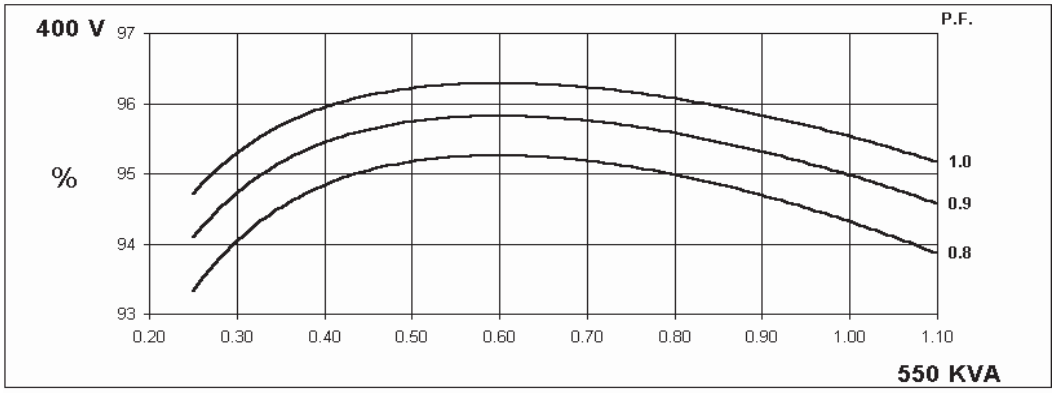

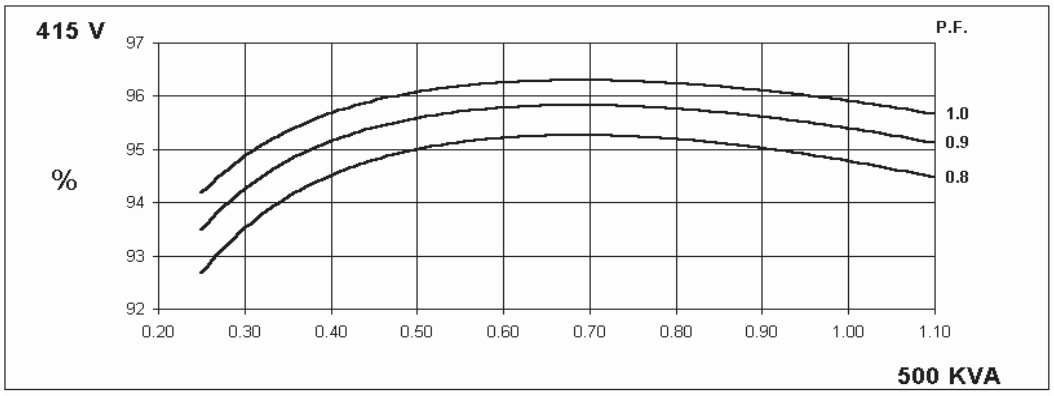

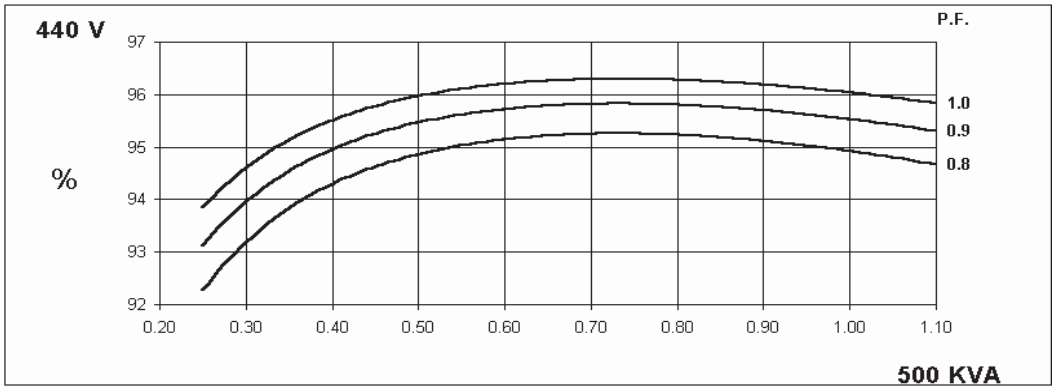

60 Hz

HCI534D/544D

Winding 311

STAMFORD

THREE PHASE EFFICIENCY CURVES

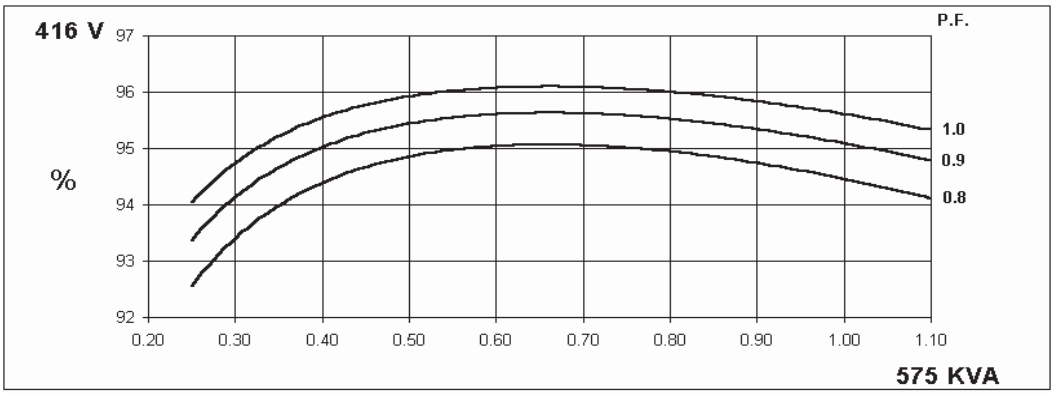

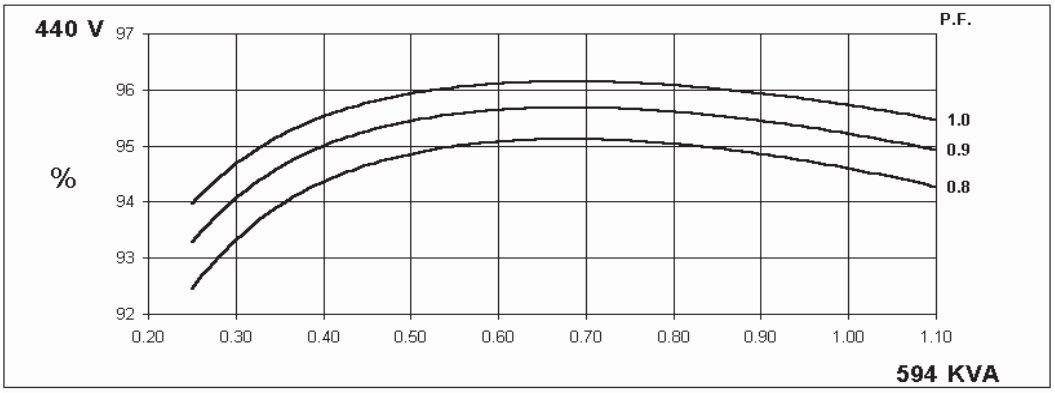

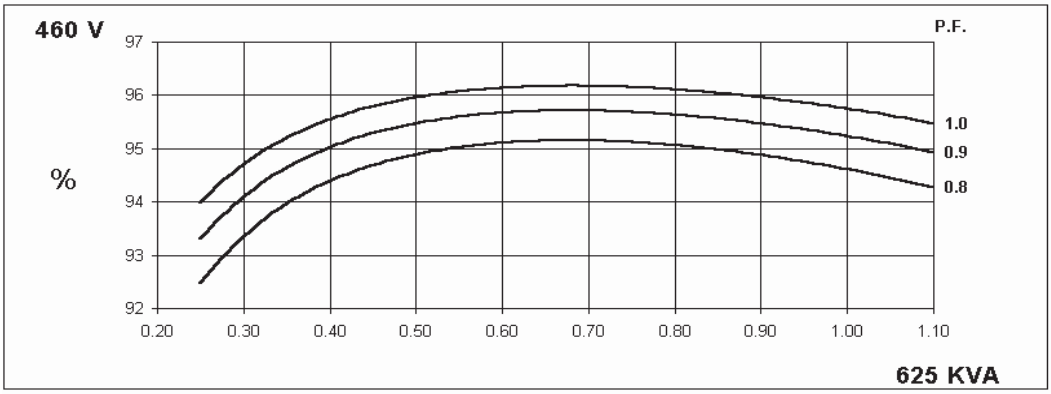

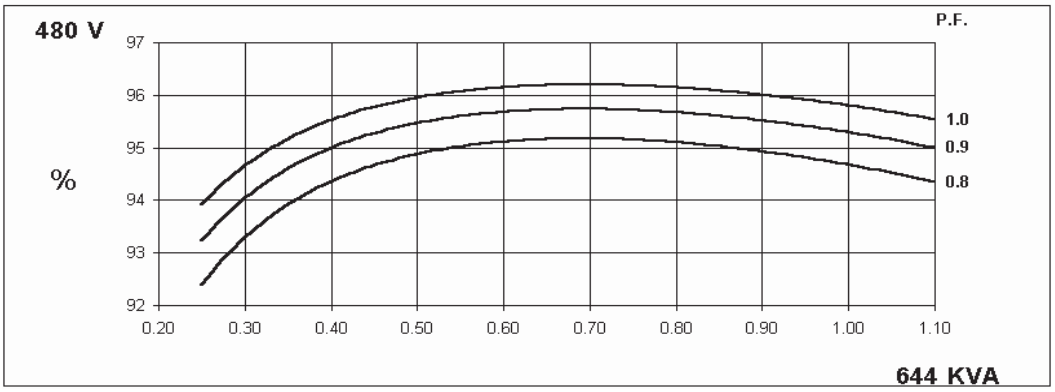

HCI534D/544D

STAMFORD

Winding 311

Locked Rotor Motor Starting Curve

50 Hz

MX

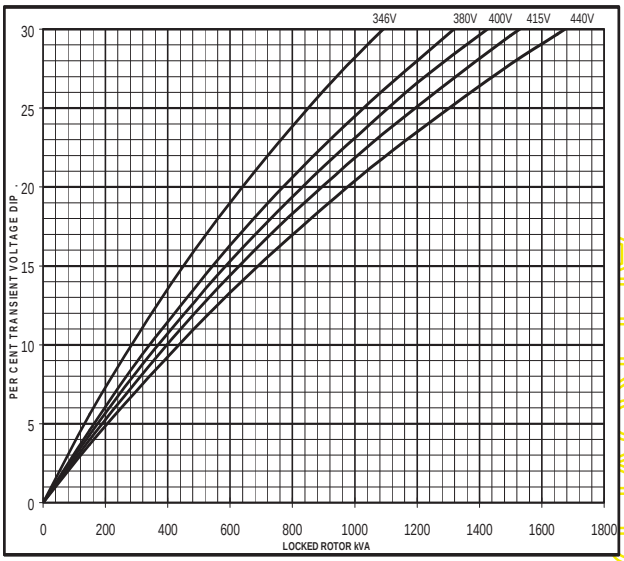

SX

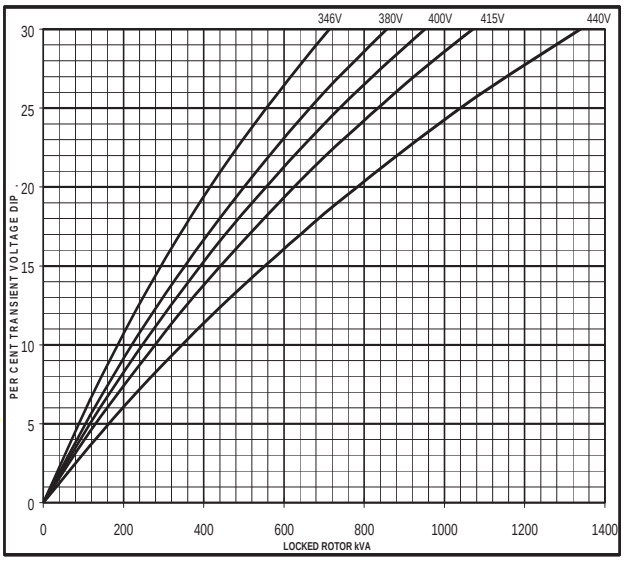

60 Hz

MX

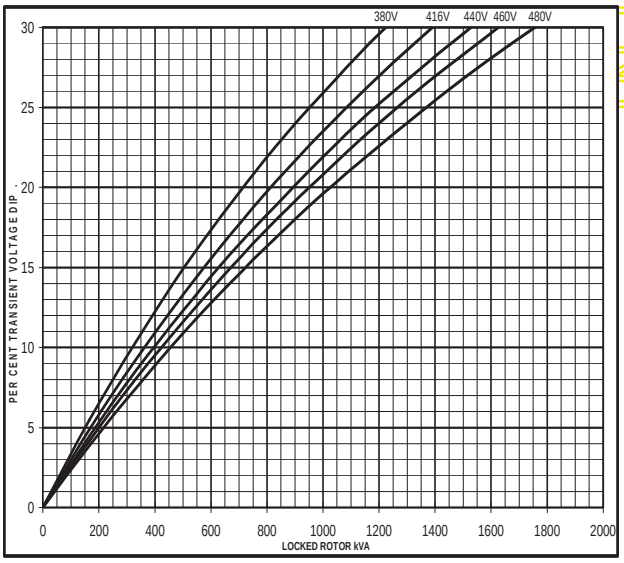

SX

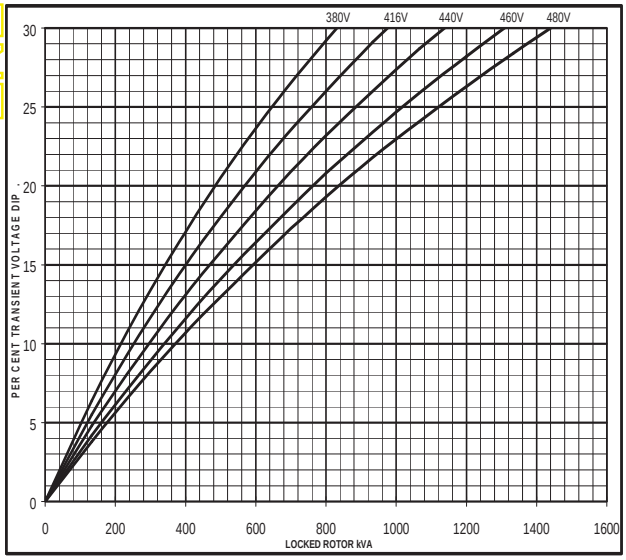

APPROVED DOCUMENT

Three-phase Short Circuit Decrement Curve. No-load Excitation at Rated Speed
Based on star (wye) connection.

50 Hz

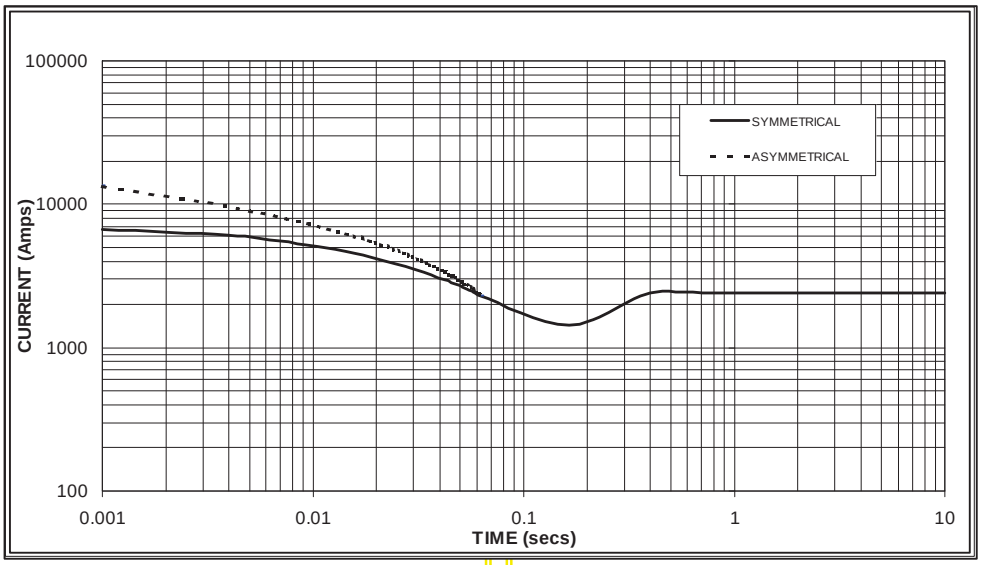

Sustained Short Circuit = 2,400 Amps

60 Hz

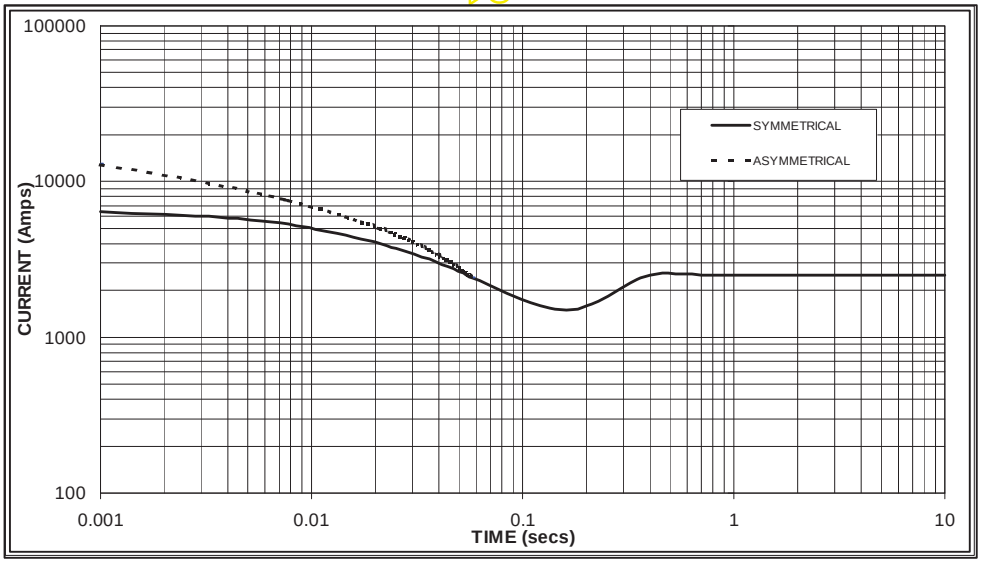

Sustained Short Circuit = 2,500 Amps

Note 1

The following multiplication factors should be used to adjust the values from curve between time 0.001 seconds and the minimum current point in respect of nominal operating voltage :

50Hz		60Hz	
Voltage	Factor	Voltage	Factor
380v	X 1.00	416v	X 1.00
400v	X 1.06	440v	X 1.06
415v	X 1.09	460v	X 1.12
440v	X 1.12	480v	X 1.20

The sustained current value is constant irrespective of voltage level

Note 2

The following multiplication factor should be used to convert the values calculated in accordance with NOTE 1 to those applicable to the various types of short circuit :

	3-phase	2-phase L-L	1-phase L-N
Instantaneous	x 1.00	x 0.87	x 1.30
Minimum	x 1.00	x 1.80	x 3.20
Sustained	x 1.00	x 1.50	x 2.50
Max. sustained duration	10 sec.	5 sec.	2 sec.

All other times are unchanged

Note 3

Curves are drawn for Star (Wye) connected machines. For other connections the following multipliers should be applied to current values as shown :

Parallel Star = Curve current value X 2

Series Delta = Curve current value X 1.732

HCI534D/544D

STAMFORD

Winding 311 0.8 Power Factor

RATINGS

	Class - Temp Rise	Cont. F - 105/40°C				Cont. H - 125/40°C				Standby - 150/40°C				Standby - 163/27°C			
50 Hz	Series Star (V)	380	400	415	440	380	400	415	440	380	400	415	440	380	400	415	440
	Parallel Star (V)	190	200	208	220	190	200	208	220	190	200	208	220	190	200	208	220
	Series Delta (V)	220	230	240	254	220	230	240	254	220	230	240	254	220	230	240	254
	kVA	450	495	450	450	500	550	500	500	515	575	515	515	550	590	550	530
	kW	360	396	360	360	400	440	400	400	412	460	412	412	440	472	440	424
	Efficiency (%)	94.8	94.7	95.0	95.1	94.5	94.3	94.8	94.9	94.4	94.1	94.7	94.9	94.1	94.0	94.5	94.8
	kW Input	380	418	379	379	423	467	422	421	436	489	435	434	468	502	466	447

60 Hz	Series Star (V)	416	440	460	480	416	440	460	480	416	440	460	480	416	440	460	480
	Parallel Star (V)	208	220	230	240	208	220	230	240	208	220	230	240	208	220	230	240
	Delta (V)	240	254	266	277	240	254	266	277	240	254	266	277	240	254	266	277
	kVA	519	538	563	588	575	594	625	644	588	625	655	675	606	644	673	694
	kW	415	430	450	470	460	475	500	515	470	500	524	540	485	515	538	555
	Efficiency (%)	94.7	94.8	94.9	94.9	94.5	94.6	94.6	94.7	94.4	94.4	94.5	94.5	94.3	94.3	94.4	94.4
	kW Input	438	454	475	496	487	502	529	544	498	530	554	571	514	546	570	588

APPROVED DOC

DIMENSIONS

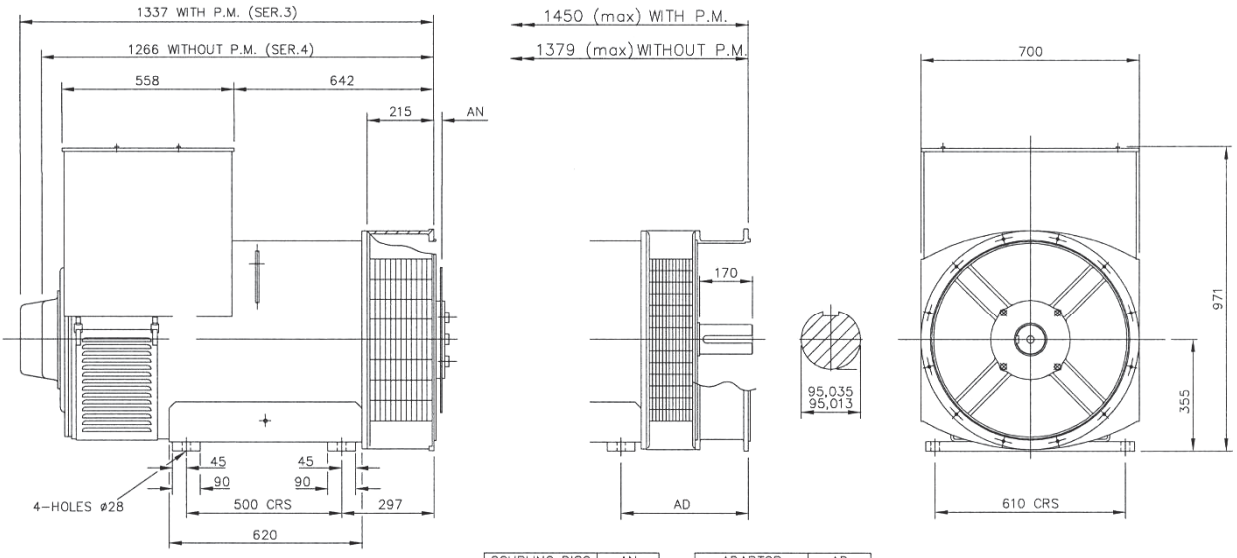

COUPLING DISC	AN
SAE 14	25,4
SAE 18	15,87
SAE 21	0

ADAPTOR	AD
SAE 00	410
SAE 0	410
SAE 1/2	390
SAE 1	390

GILLETTE GENERATORS

S-8C
PMG W/ DM110
VOLTAGE REGULATOR

FEATURES

DM110 units have the following features and capabilities:

Four control modes: automatic voltage regulation (AVR), manual or field current regulation (FCR), power factor (PF) regulation, and reactive power (var) regulation.
Programmable stability settings.
Soft start and voltage buildup control with an adjustable ramp in AVR control mode.
Excitation limiting, overexcitation limiting (OEL) and underexcitation limiting (UEL) in AVR, Var, and PF control modes.
Underfrequency (volts/hertz) regulation.
Dwell (% volts/second) regulation aids speed recovery of turbocharged engines.
Generator-to-bus voltage matching
Three-phase or single-phase generator voltage (rms) sensing/regulation in AVR mode.
Single-phase bus voltage (rms) sensing.
Single-phase generator current sensing for metering and regulation purposes.
Field current and field voltage sensing.
One analog input for proportional remote control of the setpoint.
Five contact sensing inputs for system interface.
One common output relay for alarm indication and trip functions.
Three protection functions: field overvoltage, generator overvoltage, and loss of sensing.
Generator paralleling with reactive droop compensation and reactive differential compensation.
Phase compensation accommodates various phase relationships between sensed voltage and sensed current
RS-232 communication port for personal computer communication using BESTCOMS Windows® based software for fast, user-friendly, setup and control.

Operating Power

Refer to Section 4, *Installation* for special requirements concerning the application of operating power during DM110 programming and the application of station power.

Voltage:	88 to 250 Vac, single-phase or three-phase (L-L)
Frequency:	50 to 400 Hz
Burden:	650 VA
Voltage Buildup:	6 Vac
Terminals:	3, 4, 5

Generator Voltage Sensing

Type:	1-Phase/3-Phase, 4 ranges
Burden:	<1 VA per phase
Terminals:	E1, E2, E3
50 Hertz Sensing	
Range 1:	100 Vac (85 to 132 Vac)
Range 2:	200 Vac (190 to 220 Vac)
Range 3:	400 Vac (380 to 440 Vac)
Range 4:	N/A
60 Hertz Sensing	
Range 1:	120 Vac (85 to 132 Vac)
Range 2:	240 Vac (170 to 264 Vac)
Range 3:	480 Vac (340 to 528 Vac)
Range 4:	600 Vac (540 to 660 Vac)

Generator Current Sensing

Type:	1-phase (B-phase with angle compensation in BESTCOMS), 50/60 Hz
Continuous Rating:	1 Aac maximum
Burden:	<0.1 VA
Terminals:	CT1, CT2

Bus Voltage Sensing

Type:	1-phase, 4 ranges
Burden:	<1 VA per phase
Terminals:	B1, B3
50 Hertz Sensing	
Range 1:	100 Vac (85 to 132 Vac)
Range 2:	200 Vac (190 to 220 Vac)
Range 3:	400 Vac (380 to 440 Vac)
Range 4:	N/A
60 Hertz Sensing	
Range 1:	120 Vac (85 to 132 Vac)
Range 2:	240 Vac (170 to 264 Vac)
Range 3:	480 Vac (340 to 528 Vac)
Range 4:	600 Vac (540 to 660 Vac)

Accessory Input

Voltage Range:	4 to 20 mAdc
Burden:	138 Ω, ±10%
Terminals:	A (+), B (–)

Setpoint Range

For all operating modes, 12 mA = setpoint. If the current decreases below approximately 2 mA, the accessory input is ignored.

AVR Operating Mode:	±15% of setpoint: 20 mA = +15%, 4 mA = –15%
Var Operating Mode:	±50% of setpoint: 20 mA = +50% (lagging), 4 mA = –50% (leading)
Power Factor Operating Mode:	±30% of setpoint: 20 mA = +30%, 4 mA = –30%
FCR Operating Mode:	±30% of setpoint: 20 mA = +30%, 4 mA = –30%

Communication Port

Interface:	Full duplex RS-232
Connection:	Rear panel DB-9 connector
Baud:	4800
Data Bits:	8
Parity:	None
Stop Bit:	1

Contact Input Circuits

Type:	Dry contacts
Interrogation Voltage:	13 Vdc (supplied by DM110)
Terminal Assignments for Standard Functions	
Raise:	6U, 7
Lower:	6D, 7
Var/PF or 2nd OEL Enable:	52J, 52K
Parallel Control:	52L, 52M
Voltage Matching:	VM, VMC

Common Alarm Output

Type:	Form A, closed during normal operation
Rated Load:	7 Aac/Adc continuous
Make:	30 Aac/Adc, carry for 0.2 sec
Break:	7 Aac/0.1 Adc
Operating Voltage:	240 Vac/250 Vdc maximum
Terminals:	AL1, AL2

Field Output

Continuous Rating:	63 Vdc, 7 Adc
Field Resistance:	5 Ω minimum
Terminals:	F+, F–
10 Second Forcing Rating	
200 Vac Power Input:	135 Vdc, 15 Adc
110 Vac Power Input:	90 Vdc, 10 Adc (9Ω field)
	75 Vdc, 15 Adc (5Ω field)

FCR (Manual) Operating Mode

Adjustment Range:	0 to 7 Adc
Increment:	0.1 Adc

Var Operating Mode

Adjustment Range:	–100 to 100%
Increment:	0.1%

PF Operating Mode

Adjustment Range:	0.6 lag to 0.6 lead
Increment:	0.001

AVR (Auto) Operating Mode

Adjustment Range:	See *Generator Voltage Sensing*
Voltage Regulation:	±0.25% over load range at rated power factor and constant generator frequency. ±0.5% with 3-phase sensing and shunt power at 40% THD of the voltage waveform (due to a six SCR load).
Temperature Drift:	±0.5% for a 40°C change
V/Hz Characteristic:	Slope from 0 to 3PU is adjustable in 0.01PU increments. Transition (Corner) frequency is adjustable from 40 to 65 Hz. See Figure 1-1 for the V/Hz curves.
Maximum Dwell:	20%V/s in six steps: Disabled, 4%V/s, 8%V/s, 12%V/s, 16%V/s, 20%V/s
Response Time:	Within 1 cycle

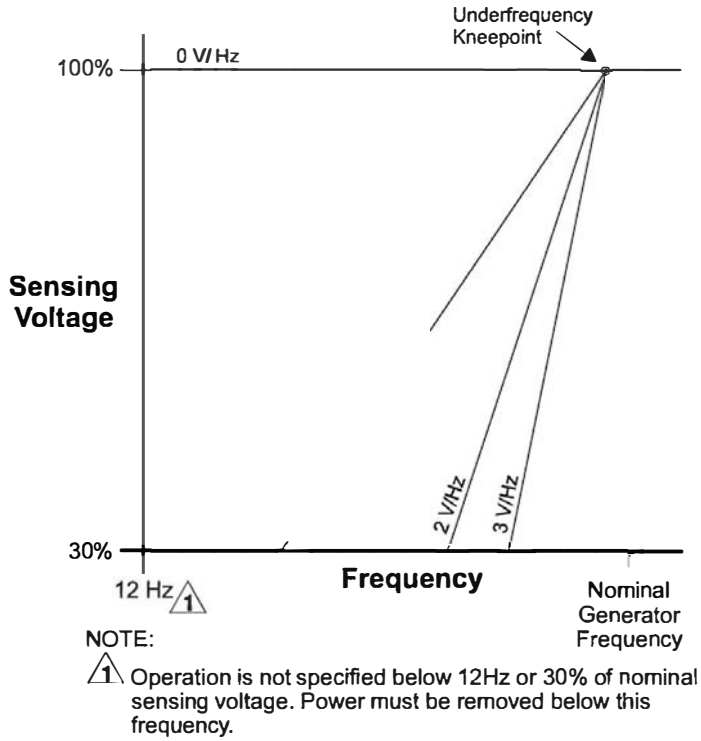

Figure 1-1. Typical V/Hz Curves

Parallel Compensation

Modes:	Reactive Droop and Reactive Differential (cross-current)*
Droop Adjust Range:	0 to 10%
Increment:	1%

* Burden can exceed 1 VA if external resistors are added to the CT circuit.

Phase Compensation

Adjustment Range:	–30 to +30°
Increment:	0.1°

Field Overvoltage Protection

Pickup Range:	0 to 250 Vdc
Time Delay:	10 s (fixed)

Generator Overvoltage Protection

Pickup

Range:	100 to 120% of system voltage setting
Increment:	1.0%

Alarm Time Delay

Range:	0 to 10 s
Increment:	1 s

Overexcitation Limiter

Pickup

Range:	0 to 15 Adc
Increment:	0.01 Adc

Alarm Time Delay

Range:	0 to 10 s
Increment:	1 s

Excitation Limiter

Pickup
Range: 0 to 15 Adc
Increment: 0.01 Adc

Underexcitation Limiter

Pickup
Range: 0 to 100% of rated vars
Increment: 1%
Alarm Time Delay
Range: 0 to 10 s
Increment: 1 s

Soft Start Function (AVR Mode Only)

Time Adjust Range: 1 to 7,200 s
Increment: 1 s

Voltage Matching

Accuracy: Generator rms voltage is matched with the bus rms voltage to within ±0.5% of the generator voltage.
Bus Secondary Input
Bias Range: ±0 to 7 in 0.001 increments
Operating Modes
Maintain or Revert

In Maintain mode the voltage setpoint shall be adjusted to the bus level during synchronism and stay at this level when the 52L/M or 52J/K contact inputs change state.

In Revert mode the DM110 operates as it did in Maintain mode except that the voltage setpoint reverts to its original value prior to synchronization, after the DM110 has detected (via the 52J/K contact input) that the generator has been on-line and is returning to its off-line state.

Time Adjustment
Range: 1 to 300 s
Increment: 0.01 s

Metering (BESTCOMS)

Generator Voltage
Range: 10 V to 79 kV
Accuracy: ±0.5% (at 25°C)
Generator Current
Range: 0.04 to 3,000 Aac (Not to exceed nominal CT rating)
Accuracy: ±0.5% (at 25°C)
Frequency
Range: 40 to 65 Hz
Accuracy: ±0.2 Hz (at 25°C)
Field Voltage
Range: 0 to 200 Vdc
Accuracy: ±5.0% (at 25°C)
Field Current
Range: 0 to 20 A
Accuracy: ±0.5% (at 25°C)
Bus Voltage
Range: 10 V to 79 kV
Accuracy: ±0.5% (at 25°C)
Auxiliary DC Input
Range: 4 to 20 mAdc
Accuracy: ±0.5% (at 25°C)

Power (Apparent, Real, and Reactive)

Range:	0 to 99 MVA, MW, Mvar

General Information

Accuracy:	±3.0% (at 25°C)
Power Factor	
Range:	–1.0 to –0.6, +0.6 to +1.0
Accuracy:	±0.02 at rated current (25°C), CT input 10% nominal rating
Phase Angle	
Range:	0 to 360 degrees
Accuracy:	±2.0 degrees (at 25°C), CT input 10% nominal rating

Environment

Operating Temperature	
DM110:	–40 to 70°C (–40 to 158°F)
Storage Temperature	
DM110:	–40 to 85°C (–40 to 185°F)
CD-ROM:	0 to 50°C (32 to 122°F)

Type Tests

Shock:	Withstands 20 G in three perpendicular planes
Vibration:	Withstands 1.2 G at 5 to 26 Hz
	Withstands 0.914 mm (0.036 in) double amplitude at 27 to 52 Hz
	Withstands 5 G at 53 to 500 Hz
Salt Fog:	Qualified per MIL-STD-810E

Physical

Weight	
Unit:	1.10 kg (2.42 lb)
Shipping:	1.31 kg (2.88 lb)
Shipping Carton Dimensions (W x H x D)	
Single Unit:	299 x 79 x 146 mm (11.75 x 3.125 x 5.75 in)
48 Units:	841 x 653 x 352 mm (33.13 x 25.69 x 13.88 in)

Agency Recognitions

cURus

cURus recognition per UL Standard 508 and CSA Standard C22.2 No. 14

CE

Emissions:	CISPR11/EN55011, Level A
Electrostatic Discharge (ESD):	IEC 1000-4-2/EN 61000-4-2, Level B
Radiated Susceptibility:	IEC 1000-4-3/EN 61000-4-3, Level A
Electrical Fast Transient:	IEC 1000-4-4/EN 61000-4-4, Level B
Radio Frequency–Conducted:	IEC 1000-4-6/EN 61000-4-6, Level A
Power Frequency–Magnetic:	IEC 1000-4-8/EN 61000-4-8, Level A
Dielectric:	IEC 255
Surge Immunity:	IEC 1000-4-5/EN 61000-4-5, Level B
Voltage Dips, Interruptions, and Variations Immunity:	IEC 1000-4-11/EN 61000-4-11, Level C

DSEGenset

DSE®

DSE7410/20

AUTO START & AUTO MAINS FAILURE MODULES

FEATURES

The DSE7410 is an Auto Start Control Module and the DSE7420 is an Auto Mains (Utility) Failure Control Module suitable for a wide variety of single, diesel or gas, gen-set applications.

A sophisticated module monitoring an extensive number of engine parameters, the DSE74xx will annunciate warnings, shutdown and engine status information on the back-lit LCD screen, illuminated LED, remote PC, audible alarm and via SMS text alerts. The module includes RS232, RS485 & Ethernet ports as well as dedicated terminals for system expansion.

The DSE7400 Series modules are compatible with electronic (CAN) and non-electronic (magnetic pick-up/alternator sensing) engines and offer a comprehensive number of flexible inputs, outputs and extensive engine protections so the system can be easily adapted to meet the most demanding industry paralleling requirements.

The modules can be easily configured using the DSE Configuration Suite Software. Selected front panel editing is also available.

ENVIRONMENTAL TESTING STANDARDS

ELECTRO-MAGNETIC COMPATIBILITY
BS EN 61000-6-2
EMC Generic Immunity Standard for the Industrial Environment
BS EN 61000-6-4
EMC Generic Emission Standard for the Industrial Environment

ELECTRICAL SAFETY
BS EN 60950
Safety of Information Technology Equipment, including Electrical Business Equipment

TEMPERATURE
BS EN 60068-2-1
Ab/Ae Cold Test -30 °C
BS EN 60068-2-2
Bb/Be Dry Heat +70 °C

VIBRATION
BS EN 60068-2-6
Ten sweeps in each of three major axes
5 Hz to 8 Hz @ +/-7.5 mm,
8 Hz to 500 Hz @ 2 gn

HUMIDITY
BS EN 60068-2-30
Db Damp Heat Cyclic 20/55 °C
@ 95% RH 48 Hours
BS EN 60068-2-78
Cab Damp Heat Static 40 °C
@ 93% RH 48 Hours

SHOCK
BS EN 60068-2-27
Three shocks in each of three major axes
15 gn in 11 mS

DEGREES OF PROTECTION PROVIDED BY ENCLOSURES
BS EN 60529
IP65 - Front of module when installed into the control panel with the supplied sealing gasket.

COMPREHENSIVE FEATURE LIST TO SUIT A WIDE VARIETY OF GEN-SET APPLICATIONS

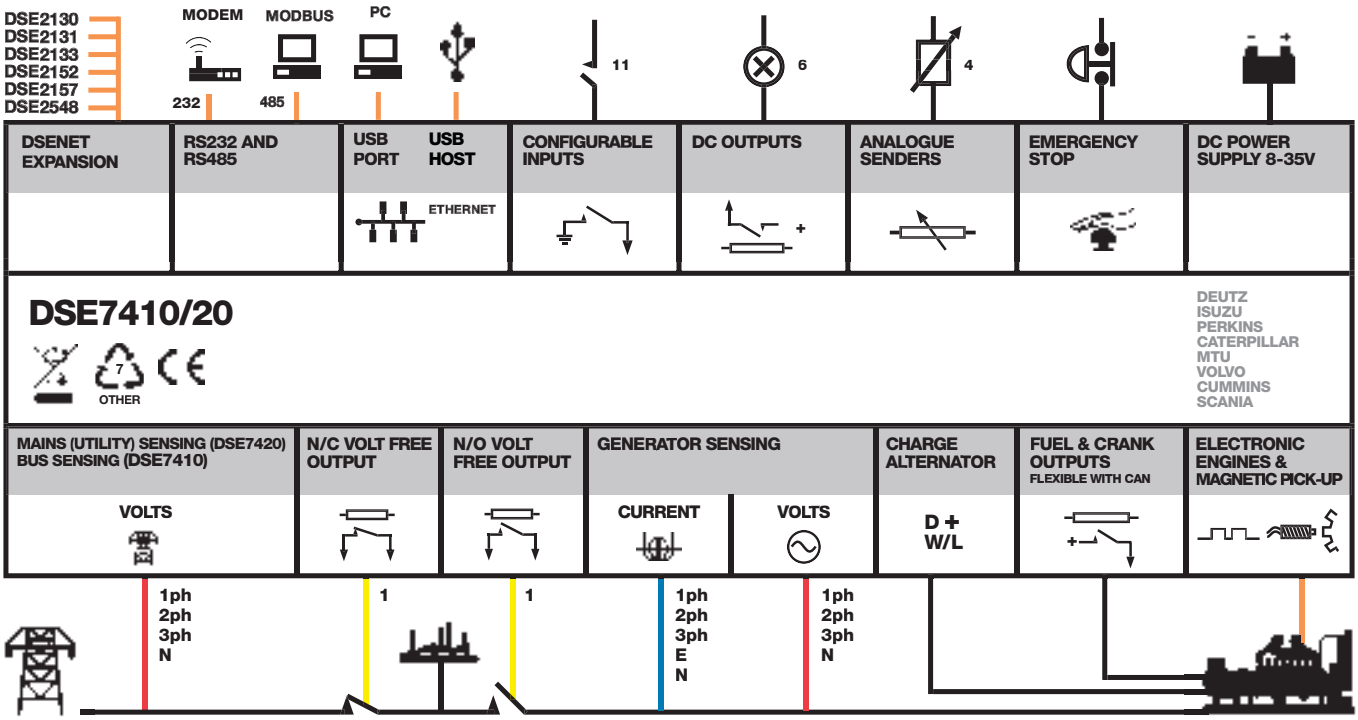

ISSUE 1

DSEGenset

DSE®

DSE7410/20

AUTO START & AUTO MAINS FAILURE MODULES

FEATURES

DSE7420

DSE7410

KEY FEATURES

- Configurable inputs (11)
- Configurable outputs (8)
- Voltage measurement
- Mains (utility) failure detection
- Dedicated load test button
- kW overload alarms
- Comprehensive electrical protection
- RS232, RS485 & Ethernet remote communications
- Modbus RTU/TCP
- PLC functionality
- Multi event exercise timer
- Back-lit LCD 4-line text display
- Multiple display languages
- Automatic start/Manual start
- Audible alarm
- Fixed and flexible LED indicators
- Event log (250)
- Engine protection
- Fault condition notification to a designated PC
- Front panel mounting
- Protected front panel programming
- Configurable alarms and timers
- Configurable start and stop timers
- Five key menu navigation
- Front panel editing with PIN protection
- 3 configurable maintenance alarms
- CAN and magnetic pick-up/Alt. sensing
- Fuel usage monitor and low fuel alarms
- Charge alternator failure alarm
- Manual speed control (on compatible CAN engines)
- Manual fuel pump control
- "Protections disabled" feature
- Reverse power protection
- Power monitoring (kW h, kV Ar, kV A h, kV Ar h)
- Load switching (load shedding and dummy load outputs)
- Automatic load transfer (DSE7420)
- Unbalanced load protection
- Independent earth fault trip
- Fully configurable via DSE Configuration Suite PC software
- Configurable display languages
- Remote SCADA monitoring via DSE Configuration Suite PC software
- Advanced SMS messaging (additional external modem required)
- Start & stop capability via SMS messaging
- Additional display screens to help with modem diagnostics
- DSENet® expansion
- Integral PLC editor

KEY BENEFITS

- RS232, RS485 & Ethernet can be used at the same time
- DSENet® connection for system expansion
- PLC functionality
- Five step dummy load support
- Five step load shedding support
- High number of inputs and outputs
- Worldwide language support
- Direct USB connection to PC
- Ethernet monitoring
- USB host
- Data logging & trending

RELATED MATERIALS

TITLE	PART NO'S
DSE7410 Installation Instructions	053-085
DSE7420 Installation Instructions	053-088
DSE74xx Quick Start Guide	057-162
DSE74xx Operator Manual	057-161
DSE74xx PC Configuration Suite Manual	057-160

SPECIFICATION

DC SUPPLY

CONTINUOUS VOLTAGE RATING
8 V to 35 V Continuous

CRANKING DROPOUTS
Able to survive 0 V for 50 mS, providing supply was at least 10 V before dropout and supply recovers to 5 V. This is achieved without the need for internal batteries

MAXIMUM OPERATING CURRENT
260 mA at 12 V, 130 mA at 24 V

MAXIMUM STANDBY CURRENT
120 mA at 12 V, 65 mA at 24 V

CHARGE FAIL/EXCITATION RANGE
0 V to 35 V

OUTPUTS

OUTPUT A (FUEL)
15 A DC at supply voltage

OUTPUT B (START)
15 A DC at supply voltage

OUTPUTS C & D
8 A AC at 250 V AC (Volt free)

AUXILIARY OUTPUTS E,F,G,H,I & J
2 A DC at supply voltage

GENERATOR

VOLTAGE RANGE
15 V to 333 V AC (L-N)

FREQUENCY RANGE
3.5 Hz to 75 Hz

MAINS (UTILITY) (DSE7420)

VOLTAGE RANGE
15 V to 333 V AC (L-N)

FREQUENCY RANGE
3.5 Hz to 75 Hz

BUS (DSE7410)

VOLTAGE RANGE
15 V to 333 V AC (L-N)

FREQUENCY RANGE
3.5 Hz to 75 Hz

MAGNETIC PICK UP

VOLTAGE RANGE
+/- 0.5 V to 70 V

FREQUENCY RANGE
10,000 Hz (max)

DIMENSIONS

OVERALL
240 mm x 172 mm x 57 mm
9.4" x 6.8" x 2.2"

PANEL CUTOUT
220 mm x 160 mm
8.7" x 6.3"

MAXIMUM PANEL THICKNESS
8 mm
0.3"

STORAGE TEMPERATURE RANGE
-40 °C to +85 °C

DEEP SEA ELECTRONICS PLC UK
Highfield House, Hunmanby Industrial Estate, Hunmanby YO14 0PH
TELEPHONE +44 (0) 1723 890099 **FACSIMILE** +44 (0) 1723 893303
EMAIL sales@deepseaplc.com **WEBSITE** www.deepseaplc.com

DEEP SEA ELECTRONICS INC USA
3230 Williams Avenue, Rockford, IL 61101-2668 USA
TELEPHONE +1 (815) 316 8706 **FACSIMILE** +1 (815) 316 8708
EMAIL sales@deepseausa.com **WEBSITE** www.deepseausa.com

Deep Sea Electronics Plc maintains a policy of continuous development and reserves the right to change the details shown on this data sheet without prior notice. The contents are intended for guidance only.

Registered in England & Wales No.01319649
VAT No.316923457

055-108/01/12 (1)

Molded Case Circuit Breakers

Power Defense ™ UL Global Series

Part Number: PDG43G0800B2NJNNNNNN

Datasheet creation date: 20/11/2019

PRODUCT VIEW *(Use Mouse to Rotate and Zoom)*

Eaton's Power Defense™ molded case circuit breakers, a globally rated platform designed to help keep your power system safe with latest protection technology. Engineered for the future: IoT and Industry 4.0 features such as built-in communications, advanced energy metering, and algorithms that signal breaker maintenance; zone selective interlock technology that clears faults quickly and locally; ArcFlash reduction options that help protect your people, and not to mention Eaton's best-inclass support and service.

Tech Data for Configured Product

Power Defense Catalog Number	PDG43G0800B2NJNNNNNN
Frame Size	Frame 4
Poles	3 Pole
Voltage	240V AC
Interruption or Breaking Capacity (Icu/Ics)	55kA
Continuous Current Rating (In)	800A
Trip Unit Type	PXR10
Trip Unit Options 1	LSI
Trip Unit Options 2	None
Indicating Accessories	None
Indicating Accessories Terminal	None
Tripping Accessories	None
Tripping Accessory Terminal	None
Tripping Accessory Voltage	None
Line Type Description	Option 1 - Standard Terminal
Line Conductor Options	(3) 3/0 - 400
Line Terminal Type	Aluminum
Load Type Description	Option 1 - Standard Terminal
Load Conductor Options	(3) 3/0 - 400
Load Terminal Type	Aluminum
Special Options - Type of Modification	None
Details	None
Additional Description	None

PDF Datasheet Powered by CADENAS PARTsolutions

Molded Case Circuit Breakers

Power Defense ™ UL Global Series

Part Number: PDG43G0800B2NJNNNNNN

Datasheet creation date: 20/11/2019

Technical drawings

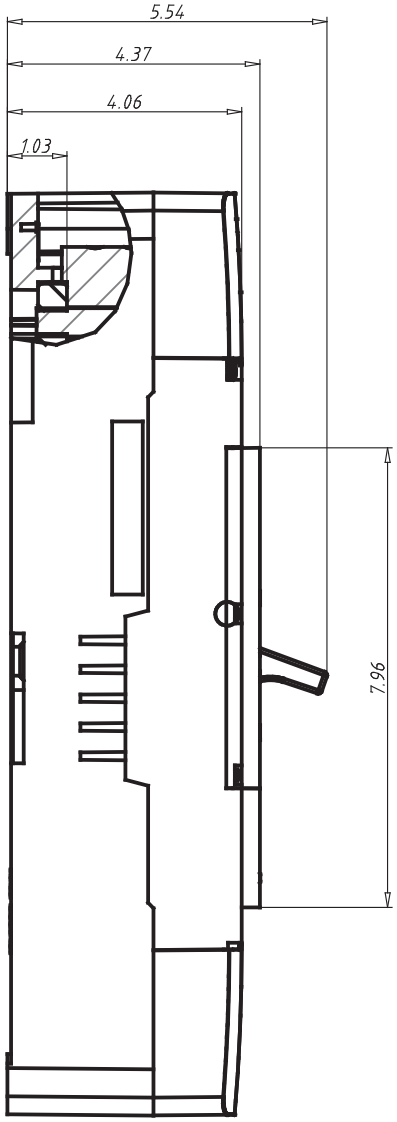

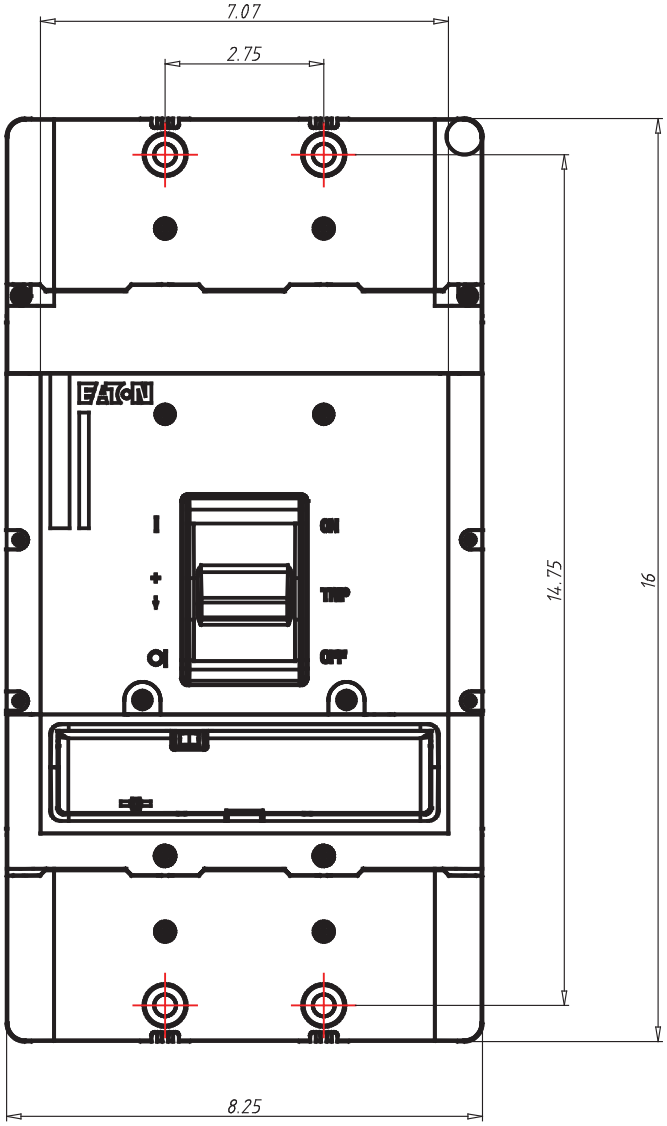

Molded Case Circuit Breakers

Power Defense ™ UL Global Series

Part Number: PDG43G0800B2NJNNNNNN

Datasheet creation date: 20/11/2019

General Technical Data

Frame Rating (In)	800A
Reference Standard	UL489, CSA 22.2, IEC 60947-2 & GB
Number of poles	3
Neutral rating	-
Interruption Rating Designator	G / K / M
UL Interruption Rating to UL 489 (240Vac)	65 / 85 / 100kA
UL Interruption Rating to UL 489 (480Vac)	35 / 50 / 65(a)kA
UL Interruption Rating to UL 489 (600Vac)	18 / 25 / 35kA
UL Interruption Rating to UL 489 (125/250Vdc)	
UL Current Limiting	-
Rated breaking capacity to IEC 60947-2 (220-240 Vac Icu)	55 / 85 / 100 / 100kA
Rated breaking capacity to IEC 60947-2 (220-240 Vac Ics)	55 / 85 / 100 / 100kA
Rated breaking capacity to IEC 60947-2 (380-415 Vac Icu)	36 / 50 / 70 / 70kA
Rated breaking capacity to IEC 60947-2 (380-415 Vac Ics)	36 / 50 / 53 / 70kA
Rated breaking capacity to IEC 60947-2 (440 Vac Icu)	30 / 35 / 50 / 65kA
Rated breaking capacity to IEC 60947-2 (440 Vac Ics)	22.5 / 35 / 40 / 50kA
Rated breaking capacity to IEC 60947-2 (525 Vac Icu)	20 / 25 / 30 / 35kA
Rated breaking capacity to IEC 60947-2 (525 Vac Ics)	16.5 / 20 / 25 / 25kA
Rated breaking capacity to IEC 60947-2 (690 Vac Icu)	8 / 10 / 15 / 20kA
Rated breaking capacity to IEC 60947-2 (690 Vac Ics)	4 / 5 /7. 5 / 10kA
Rated breaking capacity to IEC 60947-2 (125V DC Icu)	
Rated breaking capacity to IEC 60947-2 (250V DC 2P in series Ics)	22 / 22 / 25kA
Frequency	50/60Hz
Trip Unit Type	PXR10
Continuous Current Range	320 - 800A
100% UL489 Rated	Yes
Instantaneous/Short Circuit Range	2 - 8 In
Magnetic/Instantaneous Override	6800A
Dimensions H x W x D (inches)	16 x 8.25 x 4.38
Pole to pole distance inches	2,75
Approx Weight lbs	29,98
RoHS Compliance	Yes
UL File Number	E7819
Ambient Temp Calibration	
Derating at 50C	
Derating at 60C	
Derating at 70C	

1. 480Vac corresponds to 277Vac for 1P
2. 600Vac corresponds to 347Vac for 1P

PDF Datasheet Powered by CADENAS PARTsolutions

GILLETTE GENERATORS

S-10C
2” NPT FLEXIBLE DRY FUEL LINE

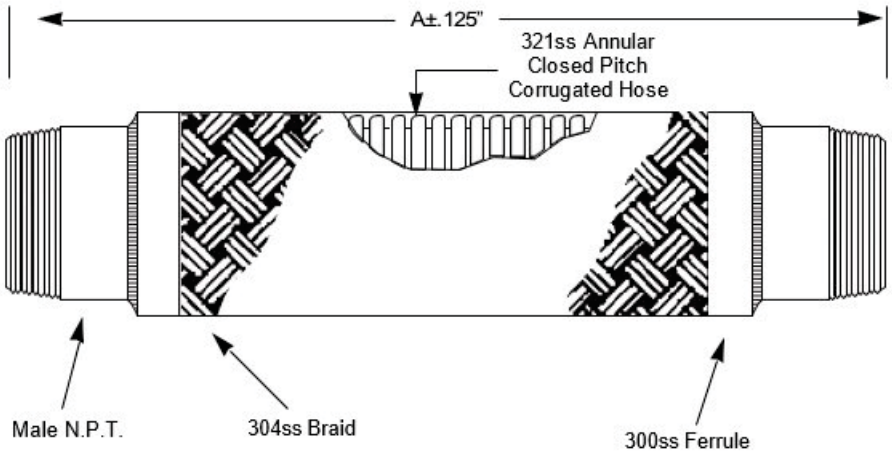

UFFMN-UL 2” I.D. (THREADED ENDS)						
I.D. (In.)	A (In.)	Pressure (PSI) 70°F	Parallel Offset (In.) Permanent	Parallel Offset (In.) Intermittent	Angular Deflection (Deg.)	Weight (Lb.)
2.00	21.00	175	2.75	1.12	60°	3.76

Applications

Flex-Hose Co. UltraFuel Flex UL536 Listed connectors are approved for flammable and combustible gases and liquids. They are used to prevent damage to critical gas/fuel fired equipment caused by piping stress where rigidly supported pipes connect to equipment. UltraFuel Flex are easily installed and reduce the possibility of equipment connection failure. Common applications include gas connections on boilers, water heaters, and unit heaters and fuel connections on emergency generators and gas turbine engine installations.

Pressures

UltraFuel Flex are designed for a maximum working pressure of 175 psi at 70°F and are capable of system test to 262 psig. Manufactured with 5:1 safety factor. All UltraFuel Flex are 100% hydrostatic tested at the factory to 262 psig to insure trouble free installation and years of quality service.

UL536 Requirements

UltraFuel Flex connectors have a UL536 listing having a nominal inside diameter from 1 to 4 inches intended for use if piping systems carrying flammable and combustible gases and liquids, at pressures not exceeding 175 psi at ambient temperature. Note: The terms flammable and combustible gases and liquids, as used herein, mean gases and liquids such as alcohol, fuel oil, gasoline, kerosene, liquefied petroleum gases and manufactured and natural fuel gases. A combustible liquid has a flash point at or above 100°F or 38°C. A flammable liquid has a flash point below 100°F and a vapor pressure not exceeding 40 PSIG (276 kPa) at 100°F.

GILLETTE GENERATORS, INC. 2921 THORNE DRIVE ELKHART, IN 46514 USA TEL. (574) 264 - 9639
www.gillettegenerators.com

GILLETTE GENERATORS

S-13G240V
4000 WATT BLOCK HEATER

HEAVY DUTY HEATING

OEMs expect dependable heating for their engines. Hotstart's Thermosiphon Tank Heaters are the industry standard for consistent, reliable coolant heating for stationary power, equipment, marine and truck applications.

SAFE AND EASY OPERATION

Pressure die-cast aluminum tank construction means Hotstart heaters are built to last. Each unit includes a hi-limit safety thermostat rated for 205 °F (95 °C) ensuring safe operation day to day, year after year.

PRECISE HEATING CONTROL

Keeping critical fluids heated is key to easy engine starts regardless of ambient temperature. The CB, CL and WL heaters come with or without flow-through thermostats for precise heat control. The heaters can be configured with fixed or adjustable thermostats to best meet your heating needs.

EQUIPMENT MANUFACTURERS SOLUTION

The CB, CL and WL heaters are ideal for OEM specifications requiring a wide range of heat power and phase options that can be hard wired into existing power systems.

Description:

Hotstart's CB, CL and WL Thermosiphon heating systems are coolant preheaters developed to maintain optimal temperatures for diesel and gas engines in stationary land power, marine, construction equipment, and truck applications.

Electrical Characteristics:

AC Input, 240V SINGLE PHASE, 16.6 Amps, Ingress-NEMA 4, Min/Max ambient temp -4-104*F (-20-40*C)
Heat Power-4kW
Temp range ON: 80*F (20*C), OFF: 100*F (38*C)

Specification:

UL/C-US Listed, CE Compliant
Length: 23.5", Width: 6.2", Height: 5.8", Weight: 10lbs

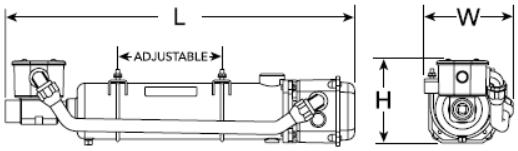

GILLETTE GENERATORS, INC. 2921 THORNE DRIVE ELKHART, IN 46514 USA TEL. (574) 264 - 9639
www.gillettegenerators.com

GILLETTE GENERATORS

ANTI-CONDENSATION HEATER S-59 THRU S-63

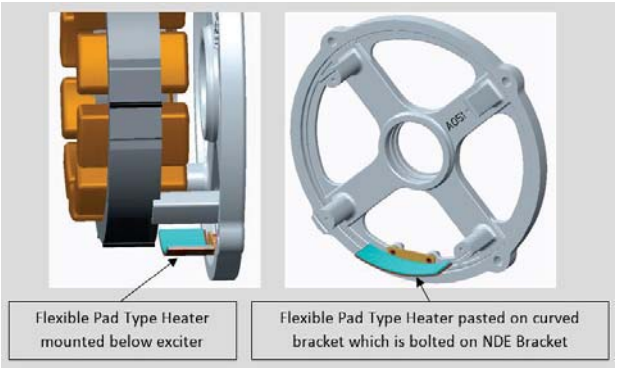

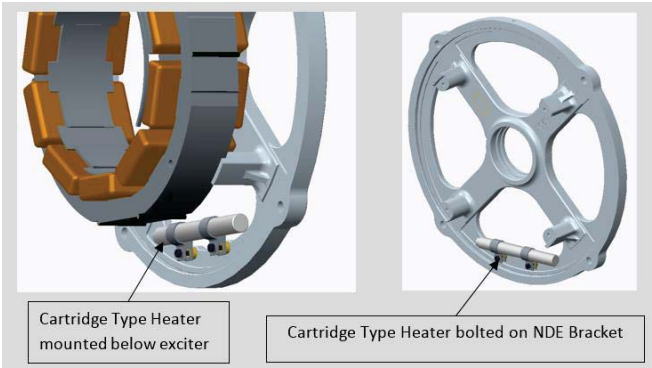

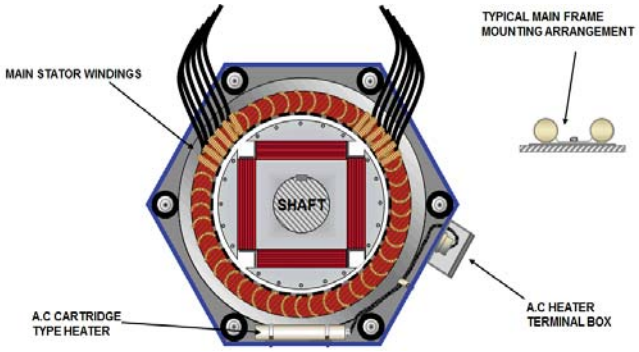

Description:

All of these anti-condensation heater types are designed to combat moderate humidity levels over periods of alternator inactivity. They are not to be used when the alternator is in use.

Anti-condensation heaters reduce the moisture level in the air immediately around the alternator when the alternator is stationary. They also maintain the atmosphere inside the alternator above the dew point during long periods of inactivity, such as when the alternator is used in a standby application.

GILLETTE GENERATORS, INC. 2921 THORNE DRIVE ELKHART, IN 46514 USA TEL. (574) 264 - 9639
www.gillettegenerators.com

Heater options for the S0L1
115V (AC); 30 Watts
230V (AC); 30 Watts

Heater options for the S0L2
115V (AC); 45 Watts
230V (AC); 45 Watts

Heater options for the S1L2
115V (AC); 80 Watts
230V (AC); 80 Watts

The UC 22 (S2) alternators have a 1 element cartridge heater
1 element: 110 to 125V; 90 to 115W
1 element: 220 to 260V; 90 to 125W

The UC 27 (S3) alternator have a 1 element cartridge heater
1 element: 110 to 125V; 90 to 115W
1 element: 220 to 260V; 90 to 125W

The S4 alternators have has a 2 element cartridge heater
2 elements in parallel (standard): 110 to 125V; 250 to 325W
2 elements in parallel (standard): 220 to 260V; 250 to 350W

The HC5 (S5) alternators have options for 1 element or 2 element cartridge heaters
1 element (standard): 110 to 138V; 225 to 355W
1 element (standard): 220 to 277V; 225 to 360W
2 elements in parallel (option): 220 to 277V; 450 to 715W
2 elements in series (option): 440 to 554V; 450 to 715W

The S6 alternators have options for 1 element or 2 element cartridge heaters
1 element (standard): 110 to 138V; 225 to 355W
1 element (standard): 220 to 277V; 225 to 360W
2 elements in parallel (option): 220 to 277V; 450 to 715W
2 elements in parallel (option): 250 to 305V; 450 to 670W

The P7 (S7) alternators have either 2 element or 4 element cartridge heaters
2 elements in parallel: 110 to 138V; 450 to 710W
2 elements in parallel: 220 to 277V; 450 to 715W
4 elements in parallel: 110 to 138V; 900 to 1415W
4 elements in parallel: 220 to 277V; 900 to 1425W

GILLETTE GENERATORS

STANDARD BATTERY CHARGER 24V SYSTEM

Description:

2 bank, 10 amp, 12/24V DC output charger with wide input voltage range (100-240V AC), is microprocessor controlled and has a maintenance mode that will keep the battery fully charged. Meets the CEC (California Energy Commission), DOE, FCC, CE, is RoHS compliant and has UL and CSA listings (cULus).

Electrical Characteristics:

Battery size: Group 24 through 31 (up to 120 Amp-Hr)
Battery Type: 12V lead acid (FLOODED and AGM)
Maximum Recharger time: 12 hours

Input Voltage Range: 100 to 240V AC 50/60 HZ
Input Current rating: 2.5 Amps maximum

Height 5.5 inches 14.0 cm	Width 7.8 inches 19.7 cm	Depth 2.4 inches 6.2 cm

GILLETTE GENERATORS, INC. 2921 THORNE DRIVE ELKHART, IN 46514 USA TEL. (574) 264 - 9639
www.gillettegenerators.com

Additional Details

Soft Start - “Soft Start” slowly charges the battery with 14.25V (10% of rated current). As soon as the max Soft Start timer (starts immediately when entering “Soft Start”) of 6 hours is reached or when the battery reaches 10V for 30 seconds the charger switches to the “Bulk stage”.

Bulk - “Bulk” charges the battery with 14.3V (100% of rated current) until the battery reaches13.25V. As soon as the battery reaches 13.25V the Bulk timer will start counting after which it can charge the battery up to 12 hours until the voltage reaches 14.25V. As soon as the max Bulk timer

(starts when voltage level is above 13.25V while in “Bulk”) of 12 hours is reached or when the battery reaches 14.25V for 30 seconds the charger switches to the “Absorption stage”.

Absorption - “Absorption” charges the battery with 14.25V. As soon as the Absorption timer (starts immediately when entering “Absorption”) reaches 14 hours or when the charge current drops below 10% of the rated current for 30 seconds the charger switches to the “Float stage”.

Float - “Float” keeps the charger on a specific voltage level of 13.25V (100% of rated current) for a period and then will switch to the “Maintenance stage”

Maintenance - As soon as the re-cycle timer reaches 14 days (336 hours) or when thevoltage drops below 12.8V for 30 seconds the charger switches back to “Bulk stage”

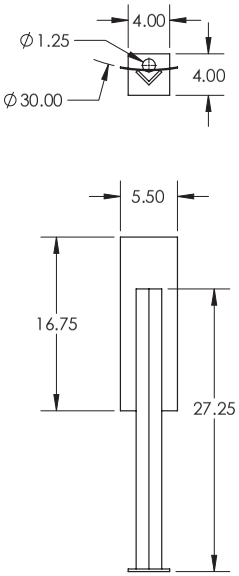

DETAIL VERTICAL MOUNTING LEG

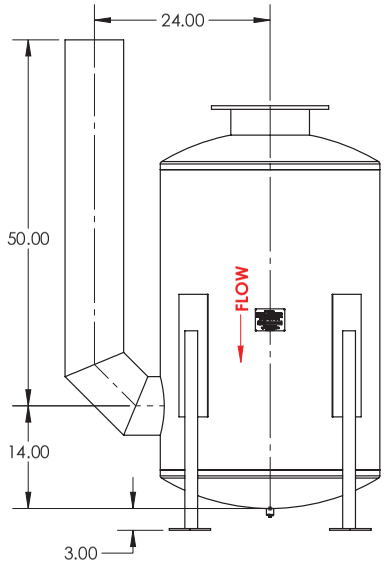

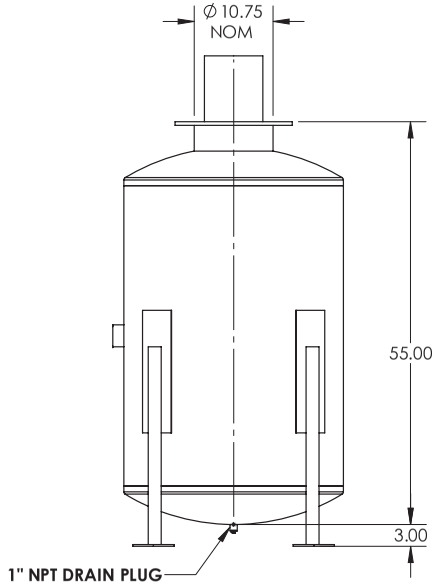

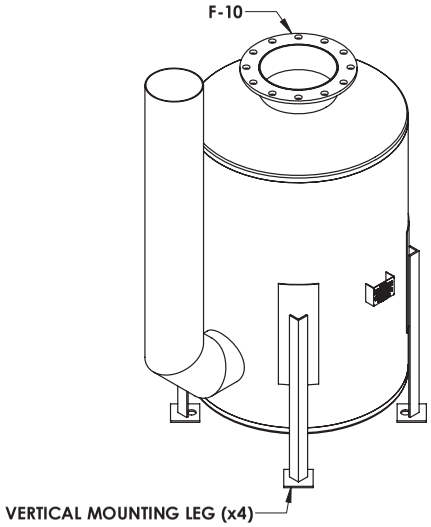

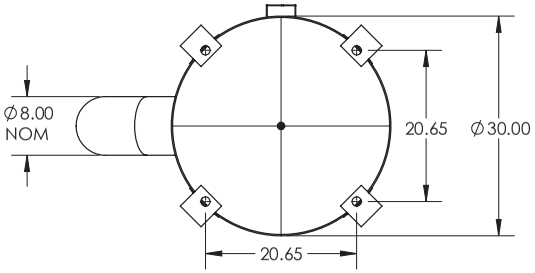

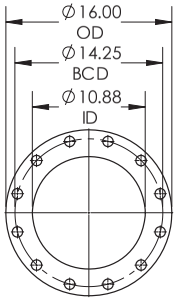

DETAIL F-10
10" ANSI 150# FLANGE
0.50" THK

SILENCER DETAIL

SILENCER GRADE: CRITICAL GRADE
ATTENUATION: 30-35 dBA
SILENCER SHELL: STANDARD SHELL (NO INSULATION)
SILENCER TUBES: STANDARD TUBES (NO INSULATION)

NOTES:
- ALL DIMENSIONS ARE IN INCHES
- DRAWING REQUIRES APPROVAL BEFORE PRODUCTION
- THIS IS NOT A FINAL PRODUCTION DRAWING, SOME DIMENSIONS MAY BE SUBJECT TO CHANGE

MATERIAL: CARBON STEEL CONSTRUCTION	PAINT: HIGH HEAT BLACK	APPROX. WEIGHT (LBS): 600
UNLESS OTHERWISE NOTED 1. REMOVE ALL BURRS AND SHARP EDGES 2. DIMENSIONS ARE IN INCHES TOLERANCES 0.XX ± 1/8" 0.XXX ± 1/16"	E. I. WILLIAMS INDUSTRIES INC. Building Sound Solutions	CONTACT # 905-428-0950 INFO@EIWILLIAMS.COM WWW.EIWILLIAMS.COM
TITLE: CYLINDRICAL SILENCER	DRAWING #: QUOTE #23371	DATE: 2023-09-26
MODEL #: GE5S-10-SP	DRAWN BY: AJ	REV: 00 / SHEET: 1 OF 1

CONFIDENTIAL: THIS DRAWING CONTAINS TECHNICAL INFORMATION PROPRIETARY TO E.I. WILLIAMS INDUSTRIES INC. / LLC IT MAY NOT BE COPIED, REPRODUCED OR USED IN WHOLE OR IN PART IN ANY WAY WITHOUT WRITTEN PERMISSION FROM E.I. WILLIAMS INDUSTRIES INC. / LLC

LEVEL 2 & 3 ENCLOSURE OUTLINE DIMENSIONS
FOR SP-4000 THRU SP-5000

TOP VIEW

(GEN-SET HAS (6) DOORS, (3) SHOWN OPEN ARE TYPICAL FOR BOTH SIDES)

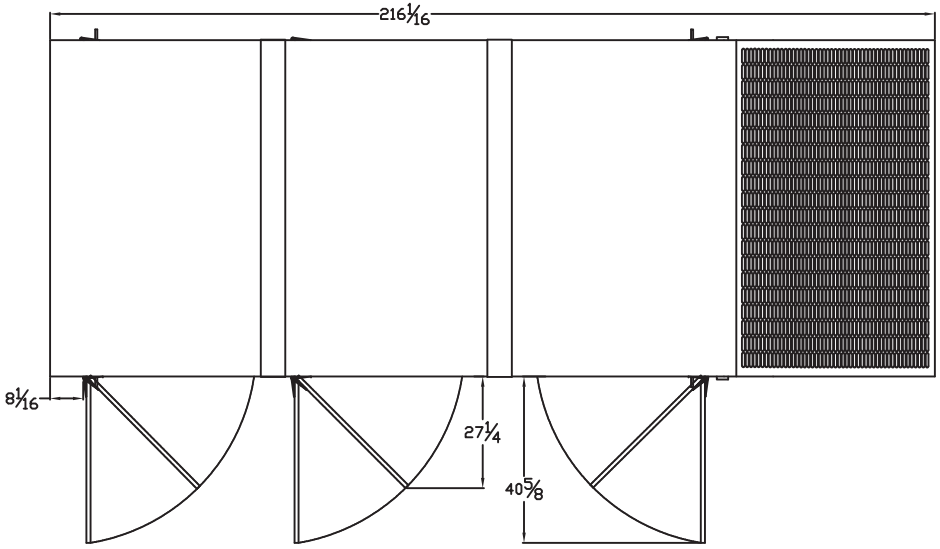

FRAME VIEW

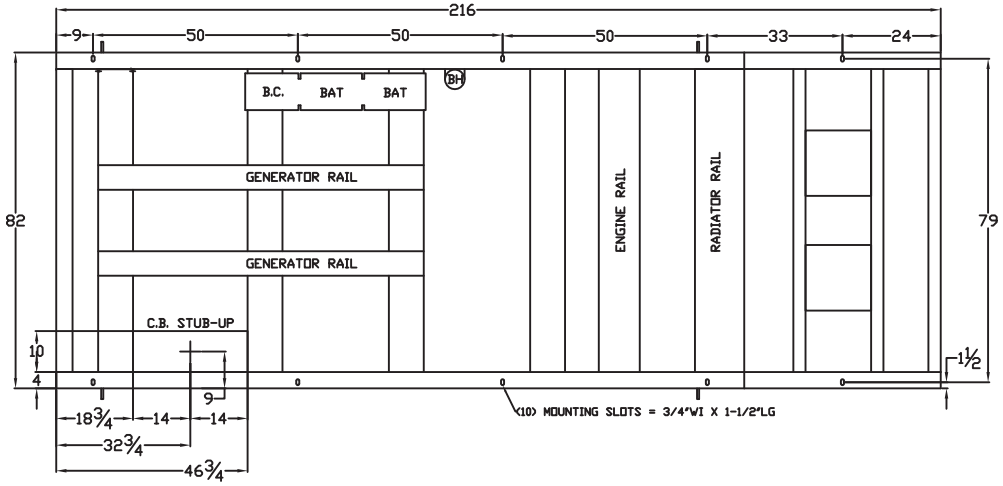

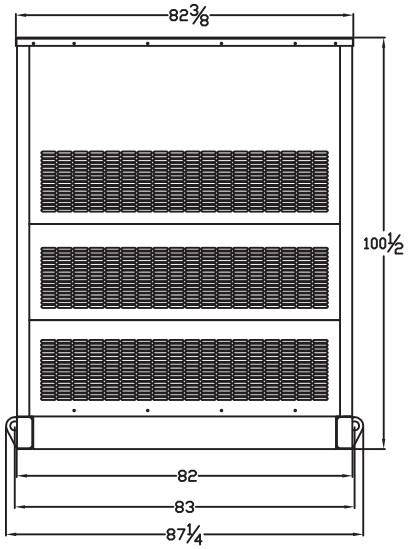

GENERATOR END VIEW

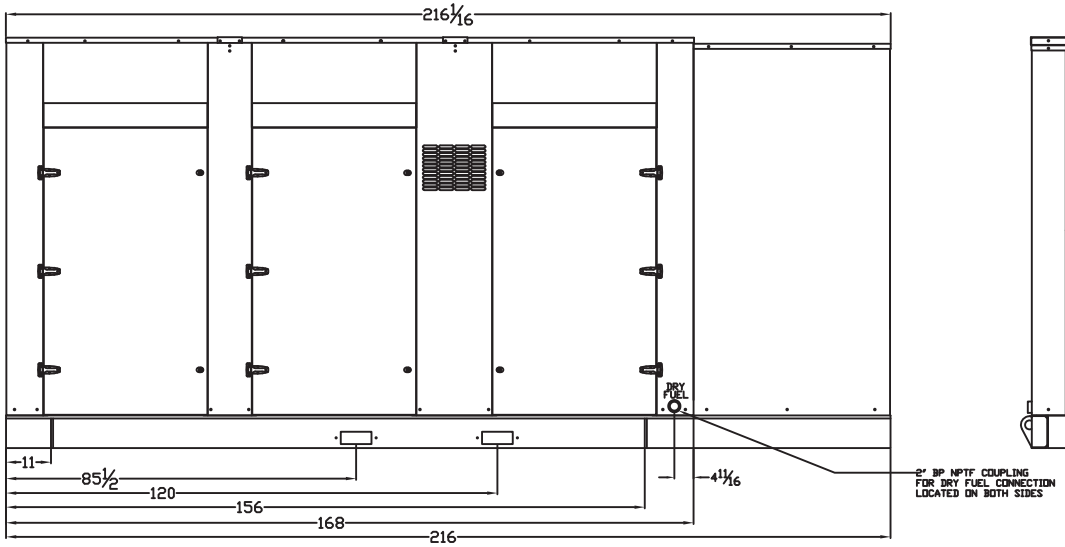

SIDE VIEW

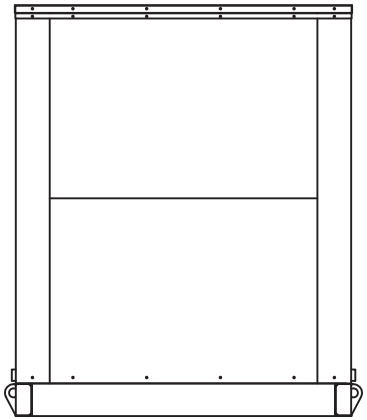

RADIATOR END VIEW

SP-4000-SP-5000-L2-L3-GENERATOR-SET-HINGES-OVERVIEW-20230130