SUBMITTAL

CATERPILLAR D300 GC
300 KW/277/480 VOLT
DIESEL GENERATOR

ZIEGLER POWER SYSTEMS CAT

8050 County Road 101 East
Shakopee, MN 55379-9734

August, 2024

INDEX

1. **Bill of Material**
    a. Proposal + Bill of Material
2. **Technical Information**
    a. Engine Data
    b. Generator Data
3. **Generator Package Information**
    a. Generator Cut Sheet
4. **Engine Control and Monitoring**
    a. GCCP 1.2 Control Panel (EMCP 4)
    b. Engine ECM/ ADEM
    c. Remote Annunciator
5. **Cooling System**
    a. Jacket Water Heaters
    b. Air Cleaner
    c. Coolant Heater
6. **Fuel System**
    a. Fuel Tank :Integral
    b. Fuel Level Alarms
7. **Starting System**
    a. Battery Charger
    b. Batteries
8. **Electrical**
    a. Circuit Breakers
    b. GFCI Receptacles
    c. Remote E-Stop
9. **Enclosures**
    a. Enclosure Cut Sheet
    b. Load Center
    c. Cold Weather Up-fit
    d. Paint
10. **Drawings**
    a. Engine Drawings
    b. Enclosure Drawings
    c. Pad Drawings
    d. Interconnect Drawings
11. **Warranty Information**
    a. ESC

Proposal by

8050 County Road 101 East
Shakopee, MN 55379

WE PROPOSE TO FURNISH IN ACCORDANCE WITH THE FOLLOWING SPECIFICATIONS, TERMS AND CONDITIONS

QUANTITY:	One (1) new CATERPILLAR emergency standby generator set mounted in Outdoor insulated/sound attenuated enclosure with cold weather upfit. *Color: Custom color selected by owner*
MODEL:	D300GC – Diesel
RATING:	300kW – Stand By
VOLTAGE:	277/480 volts, 3 phase, 60 Hz, 1800 RPM
BREAKER:	One (1) 600A, adjustable electronic LSI trip circuit breakers w/shunt trip
SWITCHGEAR:	Not included in base price, see optional adder below
FUEL TANK:	Dual wall fuel tank, 599 gallon capacity (24 hours)
WARRANTY:	Five (5) Year Platinum Warranty

ONE (1) EMERGENCY STANDBY GENERATOR SET, RATED AT 300KW STANDBY, 3 PHASE, 60 HERTZ, 480/277 VOLT, 1800 RPM.

ENGINE SPECIFICATIONS
Meets EPA Regulations – Tier III
C9 In-line 6, 4-cycle diesel
Electronic governor
Oil filter, spin-on type
Oil and coolant drains
Radiator cooling system, blower fan
Water pump
12V. DC starting system
Jacket water heater, 240 volt, 2500 watt
Alternator, 30 ampere, 12 VDC
Fuel system: Diesel
NFPA110 Compliant / UL2200 Listed

STANDARD ENGINE SAFETY FEATURES
Shutdowns with individual warning lamps
Fail to start / over-crank
High coolant temperature
Low lube oil pressure
Over-speed
Over-voltage
Fuel level alarms

GENERATOR SPECIFICATIONS
Class H insulation, rotor and stator, single bearing design
Flexible coupling
Brushless excitation
Generator anti-condensation heater
Permanent magnetic generator (PMG)
Solid-state regulator, +/- l. % regulation
One (1) 600 amp electronic LSI trip circuit breaker w/shunt trip

GCCP 1.2 CONTROL PANEL
• Voltage (all phases) • Current (all phases)
• Power factor • kW
• KVAR
• Transfer switch status
• Engine speed
• Low fuel pressure
• Run hours
• Service reminders
• Fault history
• Oil pressure
• Coolant temperature
• Low oil pressure shutdown
• High coolant temperature shutdown
• Overvoltage / Over-speed
• Not in auto position (flashing light)

GCCP 1.2 CONTROL PANEL CONTINUED…

• Time & Date
• Exercise speed
• Protection
  Fail to start shutdown
  Low oil pressure shutdown
  Low/High battery voltage
  Battery charger failure
  Under-speed/Over-speed
• Emergency stop
• Programmable auto crank function
• 2 wire start for any transfer switch
• Adjustable engine speed at exerciser
• RS485 port remote communication
• Governor controller and voltage regulator are built into the master control board
• Temperature range -40 °C to 85 °C

ANCILLARY EQUIPMENT

Outdoor insulated/sound attenuated enclosure 75 dBA @ 23ft.
  Color, Custom color selected by owner
Motorized air intake louvers
Enclosure space heater
Interior LED Lights w/switch
100 amp load center panel
GFCI convenience outlet
Dual wall UL listed integral fuel tank, 24-hour capacity (599 gallons), lockable fuel fill cap
Battery charger, 10-amp float type, generator mounted
Battery, with battery rack and cables
E-Stop mounted on exterior of enclosure
Remote Annunciator Panel – Shipped Loose

SWITCHGEAR

Not included in base bid.

COMMENTS AND CLARIFICATIONS

Mechanical and electrical installation not included
Crane and rigging for offloading not included
Concrete pad not included
Fuel not included
Optional adder given for ATS/Switchboard (see 1st page)
Exception: 2.08.K Access steps around enclosure not included. Top of Fuel tank is 28” off concrete pad.

- Circuit breaker height 49”
- Genset controller height 58”

ZIEGLER SERVICES

Submittal drawings
  Technical data, engine, generator, radiator and all ancillary equipment
  Reliability Certifications
Drawings, schematics, wiring diagrams
Testing
  Prototype testing

Production, factory testing
Alternator Factory Test Report
Start up and field-testing
Testing on site using native load
24-hour parts and emergency service
Five (5) year warranty
Operation and Maintenance manuals
Personnel training

NOTES

- Ziegler limits the scope of supply for this quotation to the equipment and services listed. Equipment not listed is assumed to be provided by others.
- Preventative maintenance options available for purchase.
- Ziegler cannot provide air emission permits for customers. We will provide emission information on the Caterpillar engine to the owner to aid in the permitting process.
- Orders are subject to re-stocking charges if cancelled after release for production.
- State and local permits for fire, air, fuel tanks or building permits are not included and provided by others.
- Start-up labor is to be performed during normal business hours, Monday through Friday 7:30 am to 4:00 pm. Training is to be performed at the end of start-up. Additional trips or delays required or requested due to contractor delay and/or issues with equipment not provided from Ziegler Power Systems will be billed at published field service rates.
- Field service technician availability is based upon Ziegler service operations and workload scheduling. Please allow 2-3 weeks within your project/construction schedule for technician availability from point of notice to Ziegler in coordinating services.

PERFORMANCE DATA [DM8168]

AUGUST 13, 2024

For Help Desk Phone Numbers Click here

Perf No: DM8168 **Change Level:** 05

General | Heat Rejection | Emissions | Regulatory | Altitude Derate | Cross Reference | Perf Param Ref

View PDF

SALES MODEL:	C9	**COMBUSTION:**	DIRECT INJECTION
BRAND:	CAT	**ENGINE SPEED (RPM):**	1,800
MACHINE SALES MODEL:		**HERTZ:**	60
ENGINE POWER (BHP):	480	**FAN POWER (HP):**	24.1
GEN POWER W/O FAN (EKW):	319.0	**ADDITIONAL PARASITICS (HP):**	12.3
GEN POWER WITH FAN (EKW):	300.0	**ASPIRATION:**	TA
COMPRESSION RATIO:	16.1	**AFTERCOOLER TYPE:**	ATAAC
RATING LEVEL:	STANDBY	**AFTERCOOLER CIRCUIT TYPE:**	JW+OC, ATAAC
PUMP QUANTITY:	1	**INLET MANIFOLD AIR TEMP (F):**	120
FUEL TYPE:	DIESEL	**JACKET WATER TEMP (F):**	192.2
MANIFOLD TYPE:	DRY	**TURBO CONFIGURATION:**	SINGLE
GOVERNOR TYPE:	ELEC	**TURBO QUANTITY:**	1
CAMSHAFT TYPE:	STANDARD	**TURBOCHARGER MODEL:**	S310-1.25
IGNITION TYPE:	CI	**CERTIFICATION YEAR:**	2005
INJECTOR TYPE:	EUI	**PISTON SPD @ RATED ENG SPD (FT/MIN):**	1,759.8
REF EXH STACK DIAMETER (IN):	4		
MAX OPERATING ALTITUDE (FT):	3,281		

INDUSTRY	SUB INDUSTRY	APPLICATION
ELECTRIC POWER	STANDARD	PACKAGED GENSET

General Performance Data Top

GENSET POWER WITH FAN	PERCENT LOAD	ENGINE POWER	BRAKE MEAN EFF PRES (BMEP)	BRAKE SPEC FUEL CONSUMPTN (BSFC)	ISO BRAKE SPEC FUEL CONSUMPTN (BSFC)	VOL FUEL CONSUMPTN (VFC)	ISO VOL FUEL CONSUMPTN (VFC)	ELEC SPEC FUEL CONSUMPTN (ESFC)	ISO ELEC SPEC FUEL CONSUMPTN (ESFC)
EKW	%	BHP	PSI	LB/BHP-HR	LB/BHP-HR	GAL/HR	GAL/HR	LB/EKW-HR	LB/EKW-HR
300.0	100	480	393	0.332	0.328	22.4	22.2	0.530	0.520
270.0	90	430	352	0.334	0.330	20.2	20.0	0.532	0.522
240.0	80	383	314	0.339	0.335	18.3	18.1	0.541	0.531
225.0	75	361	295	0.342	0.339	17.4	17.2	0.549	0.539
210.0	70	339	277	0.347	0.344	16.6	16.4	0.560	0.550
180.0	60	296	242	0.360	0.357	15.0	14.9	0.592	0.580
150.0	50	253	207	0.376	0.372	13.4	13.3	0.635	0.623
120.0	40	212	173	0.390	0.386	11.6	11.5	0.688	0.675
90.0	30	170	139	0.403	0.400	9.7	9.6	0.762	0.748
75.0	25	149	122	0.411	0.407	8.6	8.5	0.815	0.800
60.0	20	127	104	0.419	0.415	7.5	7.4	0.889	0.872
30.0	10	82.9	68	0.441	0.437	5.2	5.1	1.218	1.195

GENSET POWER WITH FAN	PERCENT LOAD	ENGINE POWER	INLET MFLD PRES	INLET MFLD TEMP	EXH MFLD TEMP	EXH MFLD PRES	ENGINE OUTLET TEMP	COMPRESSOR OUTLET PRES	COMPRESSOR OUTLET TEMP
EKW	%	BHP	IN-HG	DEG F	DEG F	IN-HG	DEG F	IN-HG	DEG F
300.0	100	480	82.5	122.6	1,247.3	60.6	927.2	83	450.8
270.0	90	430	78.7	121.1	1,179.5	55.9	877.6	80	428.0
240.0	80	383	74.9	121.5	1,120.8	51.5	840.4	76	406.4

GENSET POWER WITH FAN	PERCENT LOAD	ENGINE POWER	INLET MFLD PRES	INLET MFLD TEMP	EXH MFLD TEMP	EXH MFLD PRES	ENGINE OUTLET TEMP	COMPRESSOR OUTLET PRES	COMPRESSOR OUTLET TEMP
225.0	75	361	73.0	121.6	1,094.5	49.4	826.3	74	396.1
210.0	70	339	71.0	121.7	1,071.1	47.3	817.6	72	386.3
180.0	60	296	66.4	121.7	1,028.3	43.1	800.8	67	367.7
150.0	50	253	61.1	121.7	988.0	38.7	784.5	62	350.2
120.0	40	212	52.8	121.7	944.9	32.8	768.7	54	321.8
90.0	30	170	42.5	121.6	899.1	25.9	752.9	43	282.8
75.0	25	149	36.9	121.6	875.4	22.3	745.0	38	260.3
60.0	20	127	30.8	121.6	850.8	18.7	737.0	31	235.4
30.0	10	82.9	17.9	121.5	723.0	11.7	650.3	18	178.8

GENSET POWER WITH FAN	PERCENT LOAD	ENGINE POWER	WET INLET AIR VOL FLOW RATE	ENGINE OUTLET WET EXH GAS VOL FLOW RATE	WET INLET AIR MASS FLOW RATE	WET EXH GAS MASS FLOW RATE	WET EXH VOL FLOW RATE (32 DEG F AND 29.98 IN HG)	DRY EXH VOL FLOW RATE (32 DEG F AND 29.98 IN HG)
EKW	%	BHP	CFM	CFM	LB/HR	LB/HR	FT3/MIN	FT3/MIN
300.0	100	480	916.6	2,460.9	3,985.8	4,144.9	872.5	798.0
270.0	90	430	893.4	2,306.9	3,884.5	4,028.0	848.2	780.6
240.0	80	383	870.9	2,173.0	3,772.3	3,902.1	821.8	760.2
225.0	75	361	859.8	2,109.4	3,711.7	3,835.1	806.5	747.8
210.0	70	339	846.8	2,047.1	3,649.5	3,766.9	788.0	732.2
180.0	60	296	814.1	1,926.8	3,499.4	3,605.2	751.6	701.1
150.0	50	253	772.8	1,810.5	3,315.8	3,410.8	715.5	669.7
120.0	40	212	707.1	1,643.7	3,018.0	3,100.6	657.9	617.9
90.0	30	170	623.3	1,424.8	2,642.8	2,711.5	577.7	544.3
75.0	25	149	576.0	1,299.8	2,434.3	2,495.5	530.5	500.6
60.0	20	127	524.5	1,162.9	2,209.5	2,262.9	477.8	451.6
30.0	10	82.9	412.8	851.2	1,728.1	1,764.7	377.1	358.8

Heat Rejection Data Top

GENSET POWER WITH FAN	PERCENT LOAD	ENGINE POWER	REJECTION TO JACKET WATER	REJECTION TO ATMOSPHERE	REJECTION TO EXH	EXHAUST RECOVERY TO 350F	FROM OIL COOLER	FROM AFTERCOOLER	WORK ENERGY	LOW HEAT VALUE ENERGY	HIGH HEAT VALUE ENERGY
EKW	%	BHP	BTU/MIN	BTU/MIN	BTU/MIN	BTU/MIN	BTU/MIN	BTU/MIN	BTU/MIN	BTU/MIN	BTU/MIN
300.0	100	480	6,838	1,312	18,223	10,196	2,598	5,239	20,357	48,785	51,968
270.0	90	430	6,227	1,100	16,530	8,999	2,344	4,774	18,249	44,009	46,881
240.0	80	383	5,718	954	15,163	8,062	2,120	4,304	16,263	39,804	42,402
225.0	75	361	5,492	885	14,576	7,680	2,017	4,080	15,306	37,868	40,339
210.0	70	339	5,288	827	14,082	7,393	1,922	3,868	14,366	36,078	38,432
180.0	60	296	4,912	823	13,054	6,800	1,739	3,448	12,536	32,644	34,774
150.0	50	253	4,565	786	11,966	6,184	1,555	3,034	10,749	29,195	31,100
120.0	40	212	4,219	770	10,567	5,402	1,348	2,419	8,983	25,307	26,959
90.0	30	170	3,811	699	8,973	4,534	1,120	1,706	7,210	21,028	22,400
75.0	25	149	3,554	623	8,129	4,085	999	1,352	6,312	18,747	19,970
60.0	20	127	3,271	492	7,247	3,625	871	1,008	5,399	16,350	17,417
30.0	10	82.9	2,624	519	4,878	2,172	597	397	3,514	11,200	11,931

Emissions Data Top

Units Filter All Units

DIESEL

RATED SPEED NOMINAL DATA: 1800 RPM

GENSET POWER WITH FAN		**EKW**	**300.0**	**225.0**	**150.0**	**75.0**	**30.0**
ENGINE POWER		**BHP**	**480**	**361**	**253**	**149**	**82.9**
PERCENT LOAD		**%**	**100**	**75**	**50**	**25**	**10**
TOTAL NOX (AS NO2)		G/HR	1,881	970	499	267	201
TOTAL CO		G/HR	115	89	129	109	102
TOTAL HC		G/HR	26	29	43	40	35
TOTAL CO2		KG/HR	225	175	135	86	51
PART MATTER		G/HR	15.5	15.2	34.2	22.5	14.6
TOTAL NOX (AS NO2)	(CORR 5% O2)	MG/NM3	2,196.0	1,456.1	978.0	821.3	1,152.5
TOTAL CO	(CORR 5% O2)	MG/NM3	115.5	117.0	221.7	309.8	521.3
TOTAL HC	(CORR 5% O2)	MG/NM3	23.1	33.0	63.3	96.7	146.2
PART MATTER	(CORR 5% O2)	MG/NM3	12.7	17.6	52.2	50.4	64.7
TOTAL NOX (AS NO2)	(CORR 15% O2)	MG/NM3	814.9	540.3	362.9	304.8	427.7
TOTAL CO	(CORR 15% O2)	MG/NM3	42.9	43.4	82.3	115.0	193.5
TOTAL HC	(CORR 15% O2)	MG/NM3	8.6	12.2	23.5	35.9	54.2
PART MATTER	(CORR 15% O2)	MG/NM3	4.7	6.5	19.4	18.7	24.0
TOTAL NOX (AS NO2)	(CORR 5% O2)	PPM	1,070	709	476	400	561
TOTAL CO	(CORR 5% O2)	PPM	92	94	177	248	417
TOTAL HC	(CORR 5% O2)	PPM	43	62	118	180	273
TOTAL NOX (AS NO2)	(CORR 15% O2)	PPM	397	263	177	148	208
TOTAL CO	(CORR 15% O2)	PPM	34	35	66	92	155
TOTAL HC	(CORR 15% O2)	PPM	16	23	44	67	101
TOTAL NOX (AS NO2)		G/HP-HR	3.95	2.70	1.98	1.79	2.42
TOTAL CO		G/HP-HR	0.24	0.25	0.51	0.73	1.23
TOTAL HC		G/HP-HR	0.06	0.08	0.17	0.27	0.42
PART MATTER		G/HP-HR	0.03	0.04	0.14	0.15	0.18
TOTAL NOX (AS NO2)		G/KW-HR	5.37	3.67	2.69	2.44	3.29
TOTAL CO		G/KW-HR	0.33	0.34	0.70	0.99	1.67
TOTAL HC		G/KW-HR	0.08	0.11	0.23	0.37	0.57
PART MATTER		G/KW-HR	0.04	0.06	0.18	0.21	0.24
TOTAL NOX (AS NO2)		LB/HR	4.15	2.14	1.10	0.59	0.44
TOTAL CO		LB/HR	0.25	0.20	0.29	0.24	0.22
TOTAL HC		LB/HR	0.06	0.06	0.09	0.09	0.08
TOTAL CO2		LB/HR	496	387	297	189	112
PART MATTER		LB/HR	0.03	0.03	0.08	0.05	0.03
OXYGEN IN EXH		%	9.2	11.2	12.6	13.6	15.0
DRY SMOKE OPACITY		%	0.1	0.3	1.0	0.9	0.8
BOSCH SMOKE NUMBER			0.62	0.67	0.96	0.90	0.87

RATED SPEED POTENTIAL SITE VARIATION: 1800 RPM

GENSET POWER WITH FAN		**EKW**	**300.0**	**225.0**	**150.0**	**75.0**	**30.0**
ENGINE POWER		**BHP**	**480**	**361**	**253**	**149**	**82.9**
PERCENT LOAD		**%**	**100**	**75**	**50**	**25**	**10**
TOTAL NOX (AS NO2)		G/HR	2,032	1,047	539	288	217
TOTAL CO		G/HR	214	166	242	203	191
TOTAL HC		G/HR	50	54	81	76	65
PART MATTER		G/HR	30.2	29.7	66.7	43.9	28.4
TOTAL NOX (AS NO2)	(CORR 5% O2)	MG/NM3	2,371.7	1,572.5	1,056.2	887.0	1,244.7
TOTAL CO	(CORR 5% O2)	MG/NM3	216.0	218.7	414.7	579.4	974.9
TOTAL HC	(CORR 5% O2)	MG/NM3	43.7	62.4	119.7	182.7	276.3
PART MATTER	(CORR 5% O2)	MG/NM3	24.8	34.3	101.8	98.2	126.1
TOTAL NOX (AS NO2)	(CORR 15% O2)	MG/NM3	880.1	583.5	391.9	329.2	461.9
TOTAL CO	(CORR 15% O2)	MG/NM3	80.2	81.2	153.9	215.0	361.8
TOTAL HC	(CORR 15% O2)	MG/NM3	16.2	23.2	44.4	67.8	102.5
PART MATTER	(CORR 15% O2)	MG/NM3	9.2	12.7	37.8	36.5	46.8
TOTAL NOX (AS NO2)	(CORR 5% O2)	PPM	1,155	766	514	432	606
TOTAL CO	(CORR 5% O2)	PPM	173	175	332	464	780
TOTAL HC	(CORR 5% O2)	PPM	82	116	223	341	516
TOTAL NOX (AS NO2)	(CORR 15% O2)	PPM	429	284	191	160	225
TOTAL CO	(CORR 15% O2)	PPM	64	65	123	172	289
TOTAL HC	(CORR 15% O2)	PPM	30	43	83	127	191
TOTAL NOX (AS NO2)		G/HP-HR	4.27	2.92	2.13	1.94	2.61
TOTAL CO		G/HP-HR	0.45	0.46	0.96	1.36	2.30
TOTAL HC		G/HP-HR	0.11	0.15	0.32	0.51	0.79
PART MATTER		G/HP-HR	0.06	0.08	0.26	0.29	0.34
TOTAL NOX (AS NO2)		G/KW-HR	5.80	3.96	2.90	2.63	3.55
TOTAL CO		G/KW-HR	0.61	0.63	1.30	1.85	3.12
TOTAL HC		G/KW-HR	0.14	0.21	0.43	0.69	1.07
PART MATTER		G/KW-HR	0.09	0.11	0.36	0.40	0.47
TOTAL NOX (AS NO2)		LB/HR	4.48	2.31	1.19	0.64	0.48
TOTAL CO		LB/HR	0.47	0.37	0.53	0.45	0.42
TOTAL HC		LB/HR	0.11	0.12	0.18	0.17	0.14
PART MATTER		LB/HR	0.07	0.07	0.15	0.10	0.06

Regulatory Information Top

EPA TIER 3 **2005 - 2010**

GASEOUS EMISSIONS DATA MEASUREMENTS PROVIDED TO THE EPA ARE CONSISTENT WITH THOSE DESCRIBED IN EPA 40 CFR PART 89 SUBPART D AND ISO 8178 FOR MEASURING HC, CO, PM, AND NOX. THE "MAX LIMITS" SHOWN BELOW ARE WEIGHTED CYCLE AVERAGES AND ARE IN COMPLIANCE

EPA TIER 3 **2005 - 2010**

WITH THE NON-ROAD REGULATIONS.

Locality	Agency	Regulation	Tier/Stage	Max Limits - G/BKW - HR
U.S. (INCL CALIF)	EPA	NON-ROAD	TIER 3	CO: 3.5 NOx + HC: 4.0 PM: 0.20

EPA EMERGENCY STATIONARY **2011 - ----**

GASEOUS EMISSIONS DATA MEASUREMENTS PROVIDED TO THE EPA ARE CONSISTENT WITH THOSE DESCRIBED IN EPA 40 CFR PART 60 SUBPART IIII AND ISO 8178 FOR MEASURING HC, CO, PM, AND NOX. THE "MAX LIMITS" SHOWN BELOW ARE WEIGHTED CYCLE AVERAGES AND ARE IN COMPLIANCE WITH THE EMERGENCY STATIONARY REGULATIONS.

Locality	Agency	Regulation	Tier/Stage	Max Limits - G/BKW - HR
U.S. (INCL CALIF)	EPA	STATIONARY	EMERGENCY STATIONARY	CO: 3.5 NOx + HC: 4.0 PM: 0.20

Altitude Derate Data Top

STANDARD

ALTITUDE CORRECTED POWER CAPABILITY (BHP)

AMBIENT OPERATING TEMP (F)	30	40	50	60	70	80	90	100	110	120	130	140	NORMAL
ALTITUDE (FT)													
0	480	480	480	480	480	477	474	465	452	433	412	395	478
1,000	480	480	480	480	477	475	470	457	441	422	402	386	476
2,000	480	480	479	477	474	470	463	446	427	410	392	376	473
3,000	480	478	475	470	463	457	449	434	418	403	386	370	464
4,000	475	469	463	456	450	444	436	422	407	391	374	358	453
5,000	462	456	449	442	436	430	422	408	393	377	360	343	442
6,000	449	442	435	428	422	416	408	394	379	362	346	329	430
7,000	434	428	421	414	408	402	394	379	364	348	332	315	418
8,000	420	413	406	400	394	387	380	365	350	334	318	302	406
9,000	405	398	392	385	379	373	365	350	335	320	305	289	394
10,000	390	384	377	371	365	359	352	337	322	307	293	278	382
11,000	376	369	363	357	351	345	339	334	320	305	291	277	370
12,000	361	355	348	342	337	331	326	320	315	303	288	270	357
13,000	347	340	334	329	323	318	312	307	302	290	274	257	345
14,000	332	326	321	315	310	304	299	294	289	276	261	246	333
15,000	319	313	307	302	297	291	286	282	276	263	249	235	322

Cross Reference Top

Test Spec	Setting	Engine Arrangement	Engineering Model	Engineering Model Version	Start Effective Serial Number	End Effective Serial Number
0K6616	NAP	2531644	GS279	-	S9L00001	
4150068	PP5547	3950369	GS279	-	S9P00001	
4150068	PP5547	4529865	GS857	LS	S9P00001	
4150068	PP5547	5664658	PG350	G	RG300001	
4150068	PP5547	5664658	PG375	G	RE300001	

Performance Parameter Reference Top

Parameters Reference: DM9600 - 15

PERFORMANCE DEFINITIONS

PERFORMANCE DEFINITIONS DM9600

APPLICATION: Engine performance tolerance values below are representative of a typical production engine tested in a calibrated dynamometer test cell at SAE J1995 standard reference conditions. Caterpillar maintains ISO9001:2000 certified quality management systems for engine test Facilities to assure accurate calibration of test equipment. Engine test data is corrected in accordance with SAE J1995. Additional reference material SAE J1228, J1349, ISO 8665, 3046-1:2002E, 3046-3:1989, 1585, 2534, 2288, and 9249 may apply in part or are similar to SAE J1995. Special engine rating request (SERR) test data shall be noted.

PERFORMANCE PARAMETER TOLERANCE FACTORS: Power +/- 3% Torque +/- 3% Exhaust stack temperature +/- 8% Inlet airflow +/- 5% Intake manifold pressure-gage +/- 10% Exhaust flow +/- 6% Specific fuel consumption +/- 3% Specific fuel consumption (C7-C18) +/- 4% Fuel rate +/- 5% Specific DEF consumption +/- 3% DEF rate +/- 5% Heat rejection +/- 5% Heat rejection exhaust only +/- 10% Heat rejection CEM only +/- 10%
Heat Rejection values based on using treated water.
Torque is included for truck and industrial applications, do not use for Gen Set or steady state applications.
On C7 - C18 engines, at speeds of 1100 RPM and under these values are provided for reference only, and may not meet the tolerance listed.
On 3500 and C175 engines, at speeds below Peak Torque these values are provided for reference only, and may not meet the tolerance listed.
These values do not apply to C280/3600. For these models, see the tolerances listed below.

C280/3600 HEAT REJECTION TOLERANCE FACTORS: Heat rejection +/- 10% Heat rejection to Atmosphere +/- 50% Heat rejection to Lube Oil +/- 20% Heat rejection to Aftercooler +/- 5%

TEST CELL TRANSDUCER TOLERANCE FACTORS: Torque +/- 0.5% Speed +/- 0.2% Fuel flow +/- 1.0% Temperature +/- 2.0 C degrees Intake manifold pressure +/- 0.1 kPa
OBSERVED ENGINE PERFORMANCE IS CORRECTED TO SAE J1995 REFERENCE AIR AND FUEL CONDITIONS.

REFERENCE ATMOSPHERIC INLET AIR FOR 3500 ENGINES AND SMALLER SAE J1228 AUG2002 for marine engines, and J1995 JAN2014 for other engines, reference atmospheric pressure is 100 KPA (29.61 in hg), and standard temperature is 25deg C (77 deg F) at 30% relative humidity at the stated aftercooler water temp, or inlet manifold temp.
FOR 3600 ENGINES Engine rating obtained and presented in accordance with ISO 3046/1 and SAE J1995 JANJAN2014 reference atmospheric pressure is 100 KPA (29.61 in hg), and standard temperature is 25deg C (77 deg F) at 30% relative humidity and 150M altitude at the stated aftercooler water temperature.

MEASUREMENT LOCATION FOR INLET AIR TEMPERATURE Location for air temperature measurement air cleaner inlet at stabilized operating conditions.

REFERENCE EXHAUST STACK DIAMETER The Reference Exhaust Stack Diameter published with this dataset is only used for the calculation of Smoke Opacity values displayed in this dataset. This value does not necessarily represent the actual stack diameter of the engine due to the variety of exhaust stack adapter options available. Consult the price list, engine order or general dimension drawings for the actual stack diameter size ordered or options available.

REFERENCE FUEL DIESEL Reference fuel is #2 distillate diesel with a 35API gravity; A lower heating value is 42,780 KJ/KG (18,390 BTU/LB) when used at 15 deg C (59 deg F), where the density is 850 G/Liter (7.0936 Lbs/Gal).
GAS Reference natural gas fuel has a lower heating value of 33.74 KJ/L (905 BTU/CU Ft). Low BTU ratings are based on 18.64 KJ/L (500 BTU/CU FT) lower heating value gas. Propane ratings are based on 87.56 KJ/L (2350 BTU/CU Ft) lower heating value gas.

ENGINE POWER (NET) IS THE CORRECTED FLYWHEEL POWER (GROSS) LESS EXTERNAL AUXILIARY LOAD Engine corrected gross output includes the power required to drive standard equipment; lube oil, scavenge lube oil, fuel transfer, common rail fuel, separate circuit aftercooler and jacket water pumps. Engine net power available for the external (flywheel) load is calculated by subtracting the sum of auxiliary load from the corrected gross flywheel out put power. Typical auxiliary loads are radiator cooling fans, hydraulic pumps, air compressors and battery charging alternators. For Tier 4 ratings additional Parasitic losses would also include Intake, and Exhaust Restrictions.

ALTITUDE CAPABILITY Altitude capability is the maximum altitude above sea level at standard temperature and standard pressure at which the engine could develop full rated output power on the current performance data set.
Standard temperature values versus altitude could be seen on TM2001.
When viewing the altitude capability chart the ambient temperature is the inlet air temp at the compressor inlet.
Engines with ADEM MEUI and HEUI fuel systems operating at conditions above the defined altitude capability derate for atmospheric pressure and temperature conditions outside the values defined, see TM2001.
Mechanical governor controlled unit injector engines require a setting change for operation at conditions above the altitude defined on the engine performance sheet. See your Caterpillar technical representative for non standard ratings.

REGULATIONS AND PRODUCT COMPLIANCE TMI Emissions information is presented at 'nominal' and 'Potential Site Variation' values for standard ratings. No tolerances are applied to the emissions data. These values are subject to change at any time. The controlling federal and local emission requirements need to be verified by your Caterpillar technical representative.
Customer's may have special emission site requirements that need to be verified by the Caterpillar Product Group engineer.

EMISSION CYCLE LIMITS: Cycle emissions Max Limits apply to cycle-weighted averages only. Emissions at individual load points may exceed the cycle-weighted limit.

WET & DRY EXHAUST/EMISSIONS DESCRIPTION: Wet - Total exhaust flow or concentration of total exhaust flow Dry - Total exhaust flow minus water vapor or concentration of exhaust flow with water vapor excluded

EMISSIONS DEFINITIONS: Emissions : DM1176

EMISSION CYCLE DEFINITIONS
1. For constant-speed marine engines for ship main propulsion, including,diesel-electric drive, test cycle E2 shall be applied, for controllable-pitch propeller sets test cycle E2 shall be applied.
2. For propeller-law-operated main and propeller-law-operated auxiliary engines the test cycle E3 shall be applied.
3. For constant-speed auxiliary engines test cycle D2 shall be applied.
4. For variable-speed, variable-load auxiliary engines, not included above, test cycle C1 shall be applied.

HEAT REJECTION DEFINITIONS: Diesel Circuit Type and HHV Balance : DM9500

HIGH DISPLACEMENT (HD) DEFINITIONS: 3500: EM1500

RATING DEFINITIONS: Agriculture : TM6008
Fire Pump : TM6009
Generator Set : TM6035
Generator (Gas) : TM6041

Industrial Diesel : TM6010
Industrial (Gas) : TM6040
Irrigation : TM5749
Locomotive : TM6037
Marine Auxiliary : TM6036
Marine Prop (Except 3600) : TM5747
Marine Prop (3600 only) : TM5748
MSHA : TM6042
Oil Field (Petroleum) : TM6011
Off-Highway Truck : TM6039
On-Highway Truck : TM6038

SOUND DEFINITIONS: Sound Power : DM8702
Sound Pressure : TM7080

Date Released : 03/12/24

Caterpillar Confidential: **Green**
Content Owner: Commercial Processes Division
Web Master(s): PSG Web Based Systems Support
Current Date: 8/13/2024, 10:32:23 AM
© Caterpillar Inc. 2024 All Rights Reserved.
Data Privacy Statement.
Cookie Settings

GENERATOR DATA

AUGUST 13, 2024

For Help Desk Phone Numbers Click here

Selected Model

Engine: C9	**Generator Frame:** M2774L4	**Genset Rating (kW):** 300.0	**Line Voltage:** 480
Fuel: Diesel	**Generator Arrangement:** 5652322	**Genset Rating (kVA):** 375.0	**Phase Voltage:** 277
Frequency: 60	**Excitation Type:** Permanent Magnet	**Pwr. Factor:** 0.8	**Rated Current:** 451.1
Duty: STANDBY	**Connection:** SERIES STAR	**Application:** EPG	**Status:** Current

Version: 42423 /44642 /43655 /8541

Spec Information

Generator Specification

Frame: M2774L4	**Type:** SR500	**No. of Bearings:** 1
Winding Type: RANDOM WOUND		**Flywheel:** 14.0
Connection: SERIES STAR		**Housing:** 1
Phases: 3		**No. of Leads:** 12
Poles: 4		**Wires per Lead:** 0
Sync Speed: 1800		**Generator Pitch:** 0.6667

Generator Efficiency

Per Unit Load	kW	Efficiency %
0.25	75.0	90.9
0.5	150.0	93.6
0.75	225.0	94.2
1.0	300.0	94.0

Reactances	Per Unit	Ohms
SUBTRANSIENT - DIRECT AXIS X''_d	0.0993	0.0610
SUBTRANSIENT - QUADRATURE AXIS X''_q	0.1217	0.0748
TRANSIENT - SATURATED X'_d	0.1242	0.0763
SYNCHRONOUS - DIRECT AXIS X_d	2.6001	1.5975
SYNCHRONOUS - QUADRATURE AXIS X_q	1.3260	0.8147
NEGATIVE SEQUENCE X_2	0.1105	0.0679
ZERO SEQUENCE X_0	0.0052	0.0032

Time Constants	Seconds
OPEN CIRCUIT TRANSIENT - DIRECT AXIS T'_{d0}	2.0941
SHORT CIRCUIT TRANSIENT - DIRECT AXIS T'_d	0.1000
OPEN CIRCUIT SUBSTRANSIENT - DIRECT AXIS T''_{d0}	0.0124
SHORT CIRCUIT SUBSTRANSIENT - DIRECT AXIS T''_d	0.0100
OPEN CIRCUIT SUBSTRANSIENT - QUADRATURE AXIS T''_{q0}	0.1089
SHORT CIRCUIT SUBSTRANSIENT - QUADRATURE AXIS T''_q	0.0100
EXCITER TIME CONSTANT T_e	0.0170
ARMATURE SHORT CIRCUIT T_a	0.0150

Short Circuit Ratio: 0.49	Stator Resistance = 0.0176 Ohms	Field Resistance = 0.762 Ohms

Voltage Regulation

Voltage level adjustment: +/-	5.0%
Voltage regulation, steady state: +/-	0.8%
Voltage regulation with 3% speed change: +/-	0.8%
Waveform deviation line - line, no load: less than	2.0%
Telephone influence factor: less than	50

Generator Excitation

	No Load	Full Load, (rated) pf	
		Series	Parallel
Excitation voltage:	12.57 Volts	45.94 Volts	Volts
Excitation current	1.06 Amps	3.19 Amps	Amps

Selected Model

Engine: C9	**Generator Frame:** M2774L4	**Genset Rating (kW):** 300.0	**Line Voltage:** 480
Fuel: Diesel	**Generator Arrangement:** 5652322	**Genset Rating (kVA):** 375.0	**Phase Voltage:** 277
Frequency: 60	**Excitation Type:** Permanent Magnet	**Pwr. Factor:** 0.8	**Rated Current:** 451.1
Duty: STANDBY	**Connection:** SERIES STAR	**Application:** EPG	**Status:** Current

Version: 42423 /44642 /43655 /8541

Generator Mechanical Information

Center of Gravity

Dimension X	-493.0 mm	-19.4 IN.
Dimension Y	0.0 mm	0.0 IN.
Dimension Z	0.0 mm	0.0 IN.

- "X" is measured from driven end of generator and parallel to rotor. Towards engine fan is positive. See General Information for details
- "Y" is measured vertically from rotor center line. Up is positive.
- "Z" is measured to left and right of rotor center line. To the right is positive.

Generator WT = 888 kg * Rotor WT = 355 kg * Stator WT = 533 kg
1,958 LB 783 LB 1,175 LB

Rotor Balance = 0.0 mm deflection PTP
Overspeed Capacity = 125% of synchronous speed

Generator Torsional Data

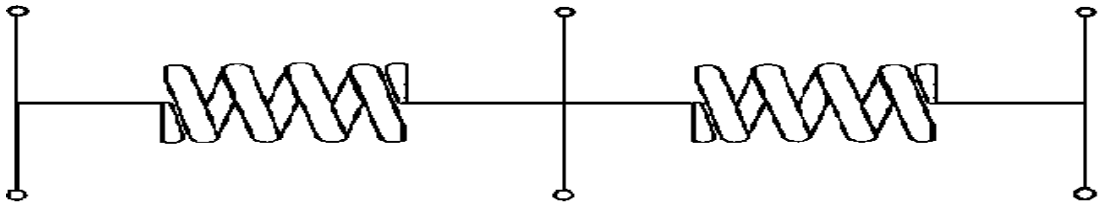

J1 = Coupling and Fan | **J2 = Rotor** | **J3 = Exciter End**

TOTAL J = J1 + J2 + J3

K1 = Shaft Stiffness between J1 + J2 (Diameter 1)

K2 = Shaft Stiffness between J2 + J3 (Diameter 2)

J1	K1	Min Shaft Dia 1	J2	K2	Min Shaft Dia 2	J3
5.5 LB IN. s^2	44.0 MLB IN./rad	4.3 IN.	30.0 LB IN. s^2	47.1 MLB IN./rad	4.5 IN.	1.5 LB IN. s^2
0.618 N m s^2	4.96876 MN m/rad	110.0 mm	3.385 N m s^2	5.32 MN m/rad	115.0 mm	0.168 N m s^2

Total J
36.9 LB IN. s^2
4.171 N m s^2

Selected Model

Engine: C9	**Generator Frame:** M2774L4	**Genset Rating (kW):** 300.0	**Line Voltage:** 480
Fuel: Diesel	**Generator Arrangement:** 5652322	**Genset Rating (kVA):** 375.0	**Phase Voltage:** 277
Frequency: 60	**Excitation Type:** Permanent Magnet	**Pwr. Factor:** 0.8	**Rated Current:** 451.1
Duty: STANDBY	**Connection:** SERIES STAR	**Application:** EPG	**Status:** Current

Version: 42423 /44642 /43655 /8541

Generator Cooling Requirements - Temperature - Insulation Data

Cooling Requirements:		**Temperature Data: (Ambient 40 ^{0}C)**	
Heat Dissipated:	19.1 kW	**Stator Rise:**	105.0 ^{0}C
Air Flow:	30.0 m^3/min	**Rotor Rise:**	105.0 ^{0}C

Insulation Class: H

Insulation Reg. as shipped: 100.0 MΩ minimum at 40 ^{0}C

Thermal Limits of Generator

Frequency:	60 Hz
Line to Line Voltage:	480 Volts
B BR 80/40	350.4 kVA
F BR -105/40	398.6 kVA
H BR - 125/40	438.0 kVA
F PR - 130/40	438.0 kVA
H PR - 150/40	464.3 kVA
H PR27 - 163/27	481.8 kVA

Selected Model

Engine: C9	**Generator Frame:** M2774L4	**Genset Rating (kW):** 300.0	**Line Voltage:** 480
Fuel: Diesel	**Generator Arrangement:** 5652322	**Genset Rating (kVA):** 375.0	**Phase Voltage:** 277
Frequency: 60	**Excitation Type:** Permanent Magnet	**Pwr. Factor:** 0.8	**Rated Current:** 451.1
Duty: STANDBY	**Connection:** SERIES STAR	**Application:** EPG	**Status:** Current

Version: 42423 /44642 /43655 /8541

Starting Capability & Current Decrement
Motor Starting Capability (0.6 pf)

SKVA	Percent Volt Dip
60	2.5
123	5.0
189	7.5
259	10.0
334	12.5
412	15.0
495	17.5
584	20.0
678	22.5
778	25.0
886	27.5
1,001	30.0
1,124	32.5
1,257	35.0
1,401	37.5
1,556	40.0

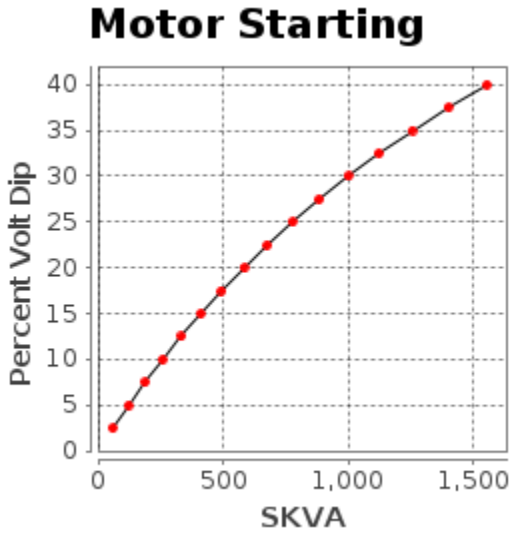

Current Decrement Data

E Time Cycle	AMP
0.0	4,520
1.0	3,281
2.0	2,698
3.0	2,297
4.0	1,974
5.0	1,704
7.5	1,455
10.0	1,587
12.5	1,703
15.0	1,790
20.0	1,747
25.0	1,636
30.0	1,580
35.0	1,562
40.0	1,561
45.0	1,566

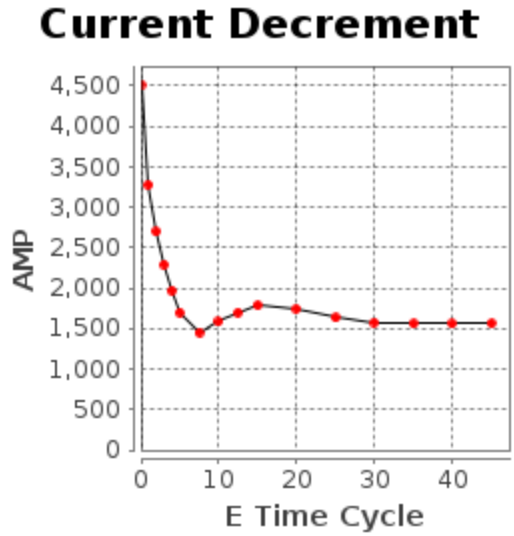

Instantaneous 3 Phase Fault Current: 4520 Amps **Instantaneous Line - Line Fault Current:** 3706 Amps

Instantaneous Line - Neutral Fault Current: 6266 Amps

Selected Model

Engine: C9	**Generator Frame:** M2774L4	**Genset Rating (kW):** 300.0	**Line Voltage:** 480
Fuel: Diesel	**Generator Arrangement:** 5652322	**Genset Rating (kVA):** 375.0	**Phase Voltage:** 277
Frequency: 60	**Excitation Type:** Permanent Magnet	**Pwr. Factor:** 0.8	**Rated Current:** 451.1
Duty: STANDBY	**Connection:** SERIES STAR	**Application:** EPG	**Status:** Current

Version: 42423 /44642 /43655 /8541

Generator Output Characteristic Curves
Open Circuit Curve

Field Current	Line - Line Volt
0.0	0
11.2	288
13.4	336
16.0	384
19.6	432
25.2	480
35.4	528
56.0	576
99.3	624
193.4	672

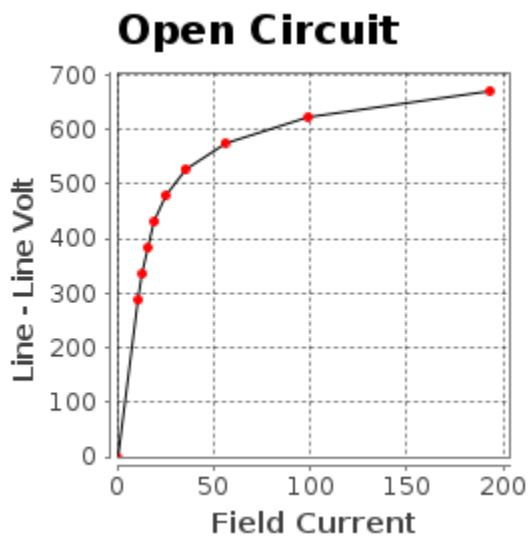

Short Circuit Curve

Field Current	Armature Current
0.0	0
28.5	271
33.3	316
38.0	361
42.8	406
47.5	451
52.3	496
57.0	541
61.8	586
66.5	631

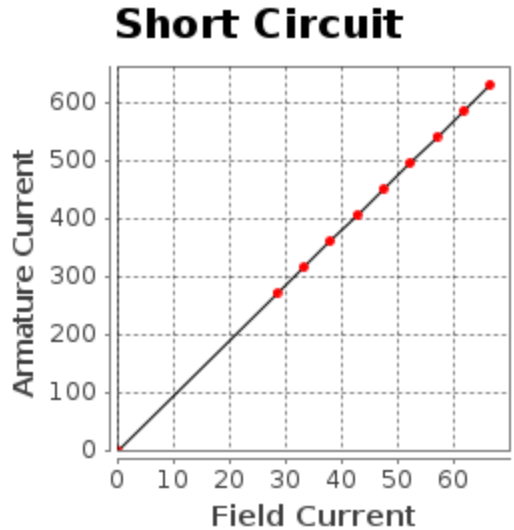

Selected Model

Engine: C9	**Generator Frame:** M2774L4	**Genset Rating (kW):** 300.0	**Line Voltage:** 480
Fuel: Diesel	**Generator Arrangement:** 5652322	**Genset Rating (kVA):** 375.0	**Phase Voltage:** 277
Frequency: 60	**Excitation Type:** Permanent Magnet	**Pwr. Factor:** 0.8	**Rated Current:** 451.1
Duty: STANDBY	**Connection:** SERIES STAR	**Application:** EPG	**Status:** Current

Version: 42423 /44642 /43655 /8541

Generator Output Characteristic Curves
Zero Power Factor Curve

Field Current	Line - Line Volt
47.5	0
57.1	240
59.2	288
61.4	336
64.1	384
67.9	432
74.2	480
85.9	528
109.6	576
160.0	624

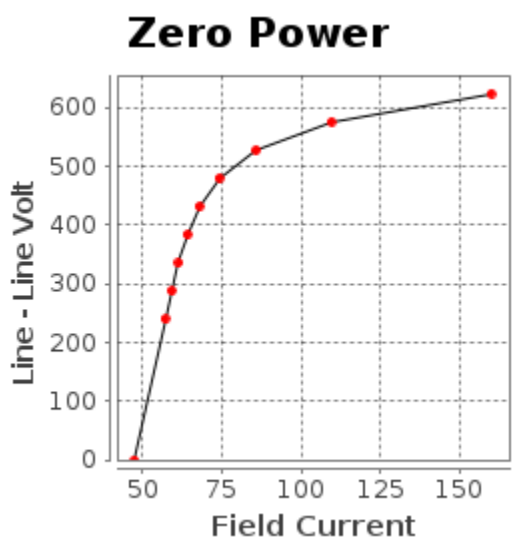

Air Gap Curve

Field Current	Line - Line Volt
0.0	0
11.0	288
12.8	336
14.6	384
16.4	432
18.3	480
20.1	528
21.9	576
23.8	624
25.6	672

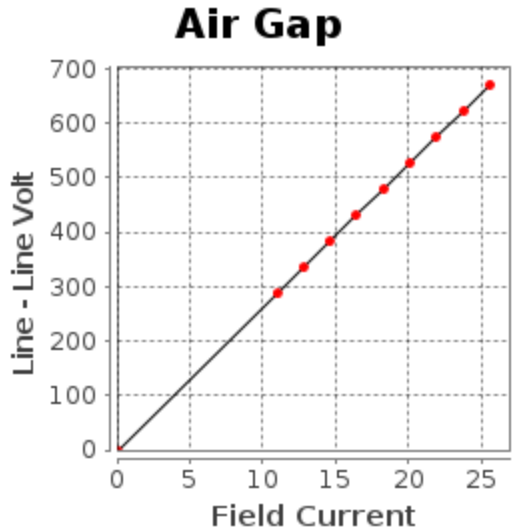

Selected Model

Engine: C9	**Generator Frame:** M2774L4	**Genset Rating (kW):** 300.0	**Line Voltage:** 480
Fuel: Diesel	**Generator Arrangement:** 5652322	**Genset Rating (kVA):** 375.0	**Phase Voltage:** 277
Frequency: 60	**Excitation Type:** Permanent Magnet	**Pwr. Factor:** 0.8	**Rated Current:** 451.1
Duty: STANDBY	**Connection:** SERIES STAR	**Application:** EPG	**Status:** Current

Version: 42423 /44642 /43655 /8541

Reactive Capability Curve

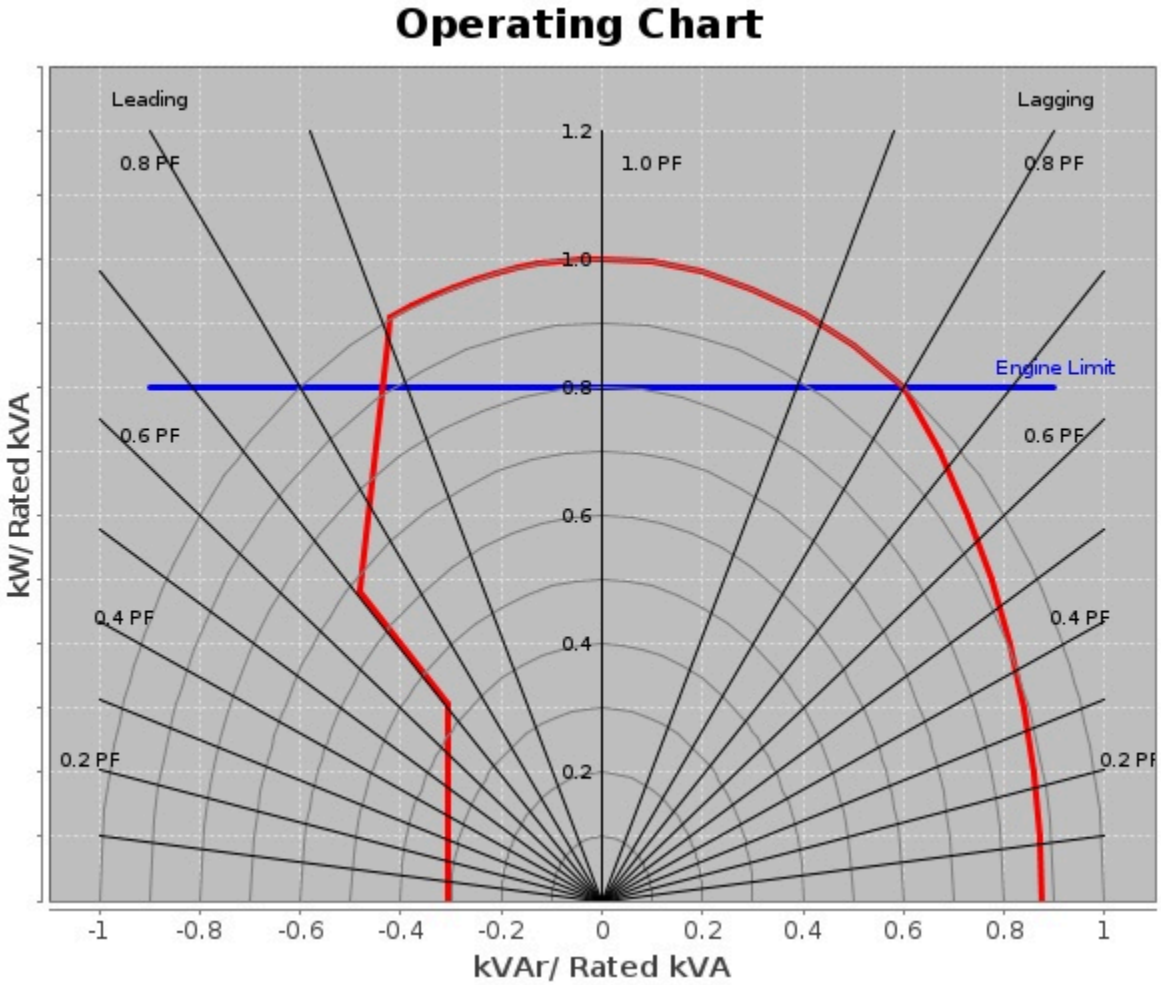

Selected Model

Engine: C9	**Generator Frame:** M2774L4	**Genset Rating (kW):** 300.0	**Line Voltage:** 480
Fuel: Diesel	**Generator Arrangement:** 5652322	**Genset Rating (kVA):** 375.0	**Phase Voltage:** 277
Frequency: 60	**Excitation Type:** Permanent Magnet	**Pwr. Factor:** 0.8	**Rated Current:** 451.1
Duty: STANDBY	**Connection:** SERIES STAR	**Application:** EPG	**Status:** Current

Version: 42423 /44642 /43655 /8541

General Information

GENERATOR INFORMATION (DM7900)

---

1. Motor Starting
Motor starting curves are obtained in accordance with IEC60034, and are displayed at 0.6 power factor.

2. Voltage Dip
Prediction of the generator synchronous voltage dip can be made by consulting the plot for the voltage dip value that corresponds to the desired motor starting kVA value.

3. Definitions
A) Generator Keys
Frame: abbreviation of generator frame size
Freq: frequency in hertz.
PP/SB: prime/standby duty respectively
Volts: line - line terminal voltage
kW: rating in electrical kilo watts
Model: engine sales model

B) Generator Temperature Rise
The indicated temperature rises are the IEC/NEMA limits for standby or prime power applications. The quoted rise figures are maximum limits only and are not necessarily indicative of the actual temperature rise of a given machine winding.

C) Centre of Gravity
The specified centre of gravity is for the generator only. For single bearing, and two bearing close coupled generators, the center of gravity is measured from the generator/engine flywheel-housing interface and from the centreline of the rotor Shaft.

For two bearing, standalone generators, the center of gravity is measured from the end of the rotor shaft and from the centerline of the rotor shaft.

D) Generator Current Decrement Curves
The generator current decrement curve indicates the generator armature current arising from a symmetrical three-phase fault at the generator terminals. Generators equipped with AREP or PMG excitation systems will sustain 300% of rated armature current for 10 seconds.

E) Generator Efficiency Curves
The efficiency curve is displayed for the generator only under the given conditions of rating, voltage, frequency and power factor. This is not the overall generating set efficiency curve.

Caterpillar Confidential: **Green**
Content Owner: Commercial Processes Division

Web Master(s): PSG Web Based Systems Support
Current Date: 8/13/2024, 10:24:00 AM
© Caterpillar Inc. 2024 All Rights Reserved.
Data Privacy Statement.
Cookie Settings

Cat® D300 GC
Diesel Generator Sets

Standby : 60 Hz

Image shown may not reflect actual configuration.

Engine Model	Cat® C9 In-line 6, 4-cycle diesel
Bore x Stroke	112 mm x 149 mm (4.4 in x 5.9 in)
Displacement	8.8 L (538 in³)
Compression Ratio	16.3:1
Aspiration	Turbocharged Air-to-Air Aftercooled
Fuel Injection System	HEUI
Governor	Electronic ADEM™ A4

Model	Standby	Emission Strategy
D300 GC	300 ekW, 375 kVA	EPA Certified for Stationary Emergency Application

PACKAGE PERFORMANCE

Performance	Standby
Frequency	60 Hz
Genset Power Rating	375 kVA
Genset power rating with fan @ 0.8 power factor	300 ekW
Emissions	EPA TIER 3
Performance Number	DM8168
Fuel Consumption	
100% load with fan, L/hr (gal/hr)	84.1 (22.2)
75% load with fan, L/hr (gal/hr)	65.3 (17.25)
50% load with fan, L/hr (gal/hr)	50.3 (13.3)
25% load with fan, L/hr (gal/hr)	32.3 (8.5)
Cooling System[1]	
Radiator air flow restriction (system), kPa (in water)	0.12 (0.48)
Radiator air flow, m³/min (cfm)	600 (21188)
Engine coolant capacity, L (gal)	14 (3.69)
Radiator coolant capacity, L (gal)	25 (6.6)
Total coolant capacity, L (gal)	45 (11.88)
Inlet Air	
Combustion air inlet flow rate m³/min (cfm)	26 (918)
Max. Allowable Combustion Air Inlet Temp, °C (°F)	50.3 (122.5)
Exhaust System	
Exhaust stack gas temperature, °C (°F)	497 (926.6)
Exhaust gas flow rate, m³/min (cfm)	69.7 (2461)
Exhaust system backpressure (maximum allowable) kPa (in. water)	10.0 (40.0)
Heat Rejection	
Heat rejection to jacket water, kW (Btu/min)	120 (6838)
Heat rejection to exhaust (total), kW (Btu/min)	320 (18223)
Heat rejection to aftercooler, kW (Btu/min)	92 (5239)
Heat rejection to atmosphere from engine, kW (Btu/min)	23 (1312)
Heat rejection from alternator, kW (Btu/min)	22 (1245)
Emissions (Nominal)[2]	
NOx, mg/Nm³ (g/hp-hr)	2196.0 (4.00)
CO, mg/Nm³ (g/hp-hr)	115.5 (0.2)
HC, mg/Nm³ (g/hp-hr)	23.1 (0.06)
PM, mg/Nm³ (g/hp-hr)	12.7 (0.03)

Alternator[3]			
Voltages	480V	208	600V
Motor starting capability @ 30% Voltage Dip, skVA	705	549	1117
Current Amps	451	1041	361
Frame Size	M2774L4	M3115L41	M2774L4
Excitation	PMG	S.E	AREP
Temperature Rise, °C	105°C	105°C	105°C

WEIGHTS & DIMENSIONS – OPEN SET

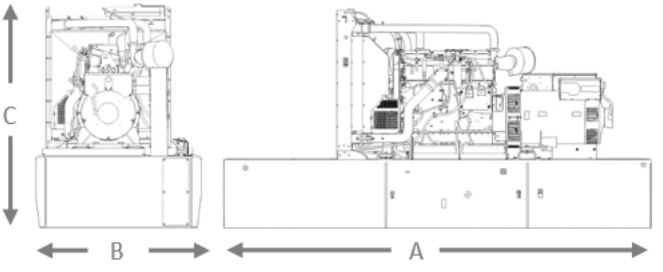

FUEL TANK CAPACITY

Tank Design	Total Capacity L (gal)	Useable Capacity L (gal)
Integral	2270 (600)	2059 (554)

Base	Length "A" mm (in)	Width "B" mm (in)	Height "C" mm (in)	Generator Set Weight kg (lb)
Skid (Wide Base)	3950 (155.5)	1440 (56.7)	1706 (67.2)	2503 (5518.2)
Integral Tank Base	3950 (155.5)	1430 (56.3)	2202 (86.7)	3143 (6929.1)

Note: General configuration not to be used for installation. See general dimension drawings for detail.

APPLICABLE CODES AND STANDARDS:

AS1359, CSA C22.2 No100-04, UL142, UL489, UL869, UL2200, NFPA37, NFPA70, NFPA99, NFPA110, IBC, IEC60034-1, ISO3046, ISO8528, NEMA MG1-22, NEMA MG1-33, 2006/95/EC, 2006/42/EC, 2004/108/EC.
Note: Codes may not be available in all model configurations. Please consult your local Cat Dealer representative for availability.

STANDBY: Output available with varying load for the duration of the interruption of the normal source power. Average power output is 70% of the standby power rating. Typical operation is 200 hours per year, with maximum expected usage of 500 hours per year.

RATINGS: Ratings are based on SAE J1349 standard conditions. These ratings also apply at ISO3046 standard conditions.

FUEL RATES: Based on fuel oil of 35° API [16° C (60° F)] gravity having an LHV of 42 780 kJ/kg (18,390 Btu/lb) when used at 29° C (85° F) and weighing 838.9 g/litre (7.001 lbs/U.S. gal.). Additional ratings may be available for specific customer requirements, contact your Caterpillar representative for details.
For information regarding Low Sulfur fuel and Biodiesel capability, please consult your Cat dealer.

DEFINITIONS AND CONDITIONS

[1] For ambient and altitude capabilities consult your Cat dealer. Air flow restriction (system) is added to existing restriction from factory.

[2] Emissions data measurement procedures are consistent with those described in EPA CFR 40 Part 89, Subpart D & E and ISO8178-1 for measuring HC, CO, PM, NOx. Data shown is based on steady state operating conditions of 77° F, 28.42 in HG and number 2 diesel fuel with 35° API and LHV of 18,390 BTU/lb. The nominal emissions data shown is subject to instrumentation, measurement, facility and engine to engine variations. Emissions data is based on 100% load and thus cannot be used to compare to EPA regulations which use values based on a weighted cycle.

[3] UL 2200 Listed packages may have oversized generators with a different temperature rise and motor starting characteristics. Generator temperature rise is based on a 40° C ambient per NEMA MG1-32.

LET'S DO THE WORK.™

LEHE2024-06 (04/24)

www.cat.com/electricpower
©2024 Caterpillar
All rights reserved.
Materials and specifications are subject to change without notice.
The International System of Units (SI) is used in this publication. CAT, CATERPILLAR, LET'S DO THE WORK, their respective logos, "Caterpillar Corporate Yellow", the "Power Edge" and Cat "Modern Hex" trade dress as well as corporate and product identity used herein, are trademarks of Caterpillar and may not be used without permission.

GCCP 1.2
Control Panel

Image shown may not reflect actual configuration.

GCCP 1.2 – Control Panel

GCCP 1.2 is an Auto Start Control Module suitable for a wide variety of diesel gen-set applications. Monitoring an extensive number of engine parameters, the modules will display warnings, shutdown and engine status information on the back-lit LCD screen, illuminated LEDs and remote PC.

Description

The controller is compatible with electronic (CAN) and non-electronic (magnetic pick-up/alternator sensing) engines and offer an extensive number of flexible inputs, outputs and extensive engine protections so the system can be easily adapted to meet the most demanding industry requirements.

The extensive list of features includes enhanced event and performance monitoring, remote communications & PLC functionality. The modules can be easily configured using a configuration suite PC software.

Full Range of Attachments

- Wide range of system expansion attachments, designed specifically to work with the GCCP controller
- Flexible packaging options for easy and cost effective installation

Benefits

- Hours counter provides accurate information for monitoring and maintenance periods
- User-friendly set-up and button layout for ease of use
- Multiple parameters are monitored & displayed simultaneously for full visibility
- The module can be configured to suit a wide range of applications for user flexibility
- PLC editor allows user configurable functions to meet user specific application requirements
- RS485 Communication port can be used for the Remote Monitoring Communication (Compatible with Cat PLG)

World Wide Product Support

- Cat dealers provide extensive pre and post sale support
- Cat dealers have over 1,600 dealer branch stores operating in 200 countries

Features

- 4-line back-lit LCD text display
- Multiple display languages
- Five-key menu navigation
- LCD alarm indication
- Customisable power-up text and images
- Data logging facility
- Internal PLC editor
- Protections disable feature
- Fully configurable via PC using USB & RS485 communication
- Front panel configuration with PIN protection
- Power save mode
- 3-phase generator sensing and protection
- Generator current and power monitoring (kW, kvar, kVA, pf) kW and kvar overload and reverse power alarms
- Over current protection
- Unbalanced load protection
- Breaker control via fascia buttons
- Fuel and start outputs configurable when using CAN Support for 0V to 10V & 4 mA to 20 mA sensors
- 8 Configurable digital inputs (3 available for Customer use)
- 8 Configurable digital outputs (5 available for Customer use)
- 4 Configurable analogue inputs (3 available for Customer use)
- CAN, MPU and alternator frequency speed sensing in one variant
- Real time clock
- Engine pre-heat and post-heat functions
- Engine run-time scheduler
- Engine idle control for starting & stopping
- Fuel usage monitor and low fuel level alarms
- 3 Configurable maintenance alarms

SPECIFICATIONS

DC SUPPLY

CONTINUOUS VOLTAGE RATING

8V to 35V continuous
5V for upto 1 minute

CRANKING DROPOUTS

Able to survive 0V for 100 mS, providing supply was at least 10V before dropout and supply recovers to 5V. This is achieved without the need for internal batteries.

LEDs and backlight will not be maintained during cranking

MAXIMUM OPERATING CURRENT

260 mA at 12V, 150 mA at 24V

MAXIMUM STANDBY CURRENT

145 mA at 12V, 85 mA at 24V

CHARGE FAIL/EXCITATION RANGE

0V to 35V

GENERATOR & MAINS (UTILITY) VOLTAGE RANGE

15V to 415 V AC (Ph to N)
26 V to 719 V AC (Ph to Ph)

MAGNETIC PICK-UP VOLTAGE RANGE

+/- 0.5 V to 70 V

FREQUENCY RANGE

10,000 Hz (max)

INPUTS

DIGITAL INPUTS A TO H

Negative switching

ANALOGUE INPUTS A TO D

Configurable as:

Negative switching digital input 0-10V sensor 4 mA to 20 mA Resistive Sensor

ANALOGUE INPUTS A TO C

Configurable as:

Negative switching digital input Resistive Sensor

OUTPUTS

OUTPUT A and B (FUEL & START)

15 A DC at supply voltage

AUXILIARY OUTPUTS C, D, E, F, G, H, I & J 2

A DC at supply voltage

DIMENSIONS

OVERALL

216 mm x 158 mm x 43 mm
8.5" x 6.2" x 1.5"

PANEL CUTOUT

184 mm x 137 mm
7.2" x 5.3"

MAXIMUM PANEL THICKNESS

8 mm
0.3"

OPERATING TEMPERATURE

-30ºC to +70ºC
-22ºF to +158ºF

STORAGE TEMPERATURE RANGE

-40ºC to +85ºC
-40ºF to +185ºF

STANDARDS

UL, cUL Listed

NFPA 70#

Electro-Magnetic Compatibility: BS EN 61000-6-2/6-4 Electrical Safety: BS EN 60950

Temperature: BS EN 60068-2-1, BS EN 60068-2-2

Vibration: BS EN 60068-2-6

Humidity: BS EN 60068-2-30, BS EN 60068-2-78 Shock: BS EN 60068-2-27

Degrees of protection provided by enclosures: BS EN 60529 Ingress Protection: IP65 – Front of module when installed into the control panel with the optional sealing gasket

Applicable codes and standards facilitate compliance to NFPA 70

Engine Controller

ADEM™ A4 Engine Controller

The ADEM™ A4 is the main Electronic Control Module (ECM) used on select diesel engines. The ADEM A4 provides a higher degree of control over a large number of combustion variables. The ADEM A4 is designed to control/interface Electronic Unit Injector (EUI) equipped engines. The ADEM A4 engine system is composed of the ADEM A4 ECM, control software, sensors, actuators, fuel injectors, and interface to the generator system. The prime benefit of an ADEM A4 engine system is to better control and maintain the particulate emissions, both steady state and transient, while improving engine performance.

Features

Reliable, Durable

All ADEM A4 controllers are designed to survive the harshest environments.

- Environmentally sealed, die-cast aluminum housing solates and protects electronic components from moisture and dirt contamination
- Rigorous vibration testing ensures product reliability and durability
- Accuracy maintained from –40°C to 85°C
- Electrical noise immunity to 100 volts / meter
- Internal circuits are designed to withstand shorts to + battery and – battery

Simple Servicing

Each ADEM A4 system works in combination with the Cat® ET service tool software to keep the engine operating at peak performance.

- Displays measured parameters
- Retrieves active and logged event code documenting abnormal system operation
- Performs calibrations and diagnostic tests
- Supports flash programming of new software into the ADEM A4 ECM

Self Diagnostics

Each ADEM A4 ECM has a full compliment of diagnostics. The ECM can detect faults in the electrical system and report those faults to the service technician for quick repair.

- Self-diagnostic capability pinpoints operational prob-lems in need of attention.

Advanced Features

- Enhanced performance from fuel injection timing and limiting
- Adjustable monitoring of vital engine parameters
- Programmable speed acceleration ramp rate
- Data link interfaces

Description

The ECM is housed in an environmentally sealed cast-ing. All wiring connections to the ECM are made using two sealed connectors: a single seventy-pin connector and a single one hundred twenty-pin connector.

Engine Speed Governing

Desired engine speed is calculated by the ECM and held within ±0.2 Hz for isochronous and droop mode. The ECM accounts for droop that is requested. The proper amount of fuel is sent to the injectors due to these calculations. The ECM also employs cooldown/shutdown strategies, acceleration delays on startup, acceleration ramp times and speed reference.

Fuel Limiting

Warm and cold fuel-air ratio control limits are con-trolled by the ECM. Electronic monitoring system derates, torque limit, and cranking limit, programmable torque scaling, and cold cylinder cutout mode are standard features.

Fuel Injection Timing

Master timing for injection is controlled by the ECM control. Temperature dependencies are accounted for in the fuel injection calculations.

Electronic Monitoring

Electronic monitoring of vital engine parameters can be programmed. Warning, derate, and shutdown event conditions may be customized by the user.

Information Management

The ECM stores information to assist with electronic troubleshooting. Active and logged diagnostic codes, active events, logged events, fuel consumption, engine hours, and instantaneous totals aid service technicians when diagnosing electronic faults and scheduling preventive maintenance.

Calibrations

Engine performance is optimized through injection timing. Auto/manual sensor calibrations are standard features.

On-Board System Tests

System tests are available to assist in electronic trou-bleshooting. These tests include: injector activation, injector cutout, and override of control outputs.

Data Link Interfaces

The ADEM A4 communicates with the EMCP via a dedicated communication network.

Electronic Sensing

The following sensing is available on the ADEM A4: oil pressure, fuel pressure, fuel temperature, atmospheric pressure, air inlet temperature, turbo outlet pressure, engine coolant temperature, engine speed, throttle, position, exhaust temperature, oil filter pressure differential, fuel filter pressure differential, air filter pressure differential and crankcase pressure.

SPECIFICATIONS

Impervious to:

Salt spray, fuel, oil and oil additives, coolant, spray cleaners, chlorinated solvents, hydrogen sulfide and methane gas, and dust.

Input and output protection

All inputs and outputs are protected against short circuits to +battery and –battery

Input voltage range (24 VDC nominal)

18 to 32 VDC

Mounting

Engine mounted

Reverse polarity protected

Shock, withstands 20g

Temperature range

Operating: –40°C to 85°C (–40°F to 185°F)
Storage: –50°C to 120°C (–58°F to 248°F)

Vibration

Withstands 8.0g @ 24 to 2 kHz

Information contained in this publication may be considered confidential. Discretion is recommended when distributing. Materials and specifications are subject to change without notice.

CAT, CATERPILLAR, LET'S DO THE WORK, their respective logos, "Caterpillar Yellow," the "Power Edge" and Cat "Modern Hex" trade dress as well as corporate and product identity used herein, are trademarks of Caterpillar and may not be used without permission.

©2019 Caterpillar
All rights reserved.

LEHE5347-03 (02/19)

Annunciators

Picture shown may not reflect actual configuration.

Remote Annunicator Moduel

It is an LED expansion module that can be used with compatible control modules. The module has been designed to display a maximum of eight individual LED indications up to a maximum distance of 1 KM (0.6 miles).

The Annunciator will consist of two modules to provide a 16 Channel Fault annunciation.

It is presented in a vertical enclosure. It includes an alarm sounder that is triggered when the host controller detects an alarm condition. The alarm can be muted using the front push button.

The Panels will be fitted with removable label cards which can be used to identify the standard NFPA alarms if desired.

It includes individual LEDs for each channel and a 'Power On' LED that flashes when the link with the host controller is lost.

Features

- The Remote annunciator has an integral Sounder/Horn
- Eight configurable LEDs (per module)
- Works up to 1 KM (0.6 miles) from the host controller
- A single controller can support five Caterpillar configured remote annunciator control boxes

ENVIRONMENTAL TESTING STANDARD

ELECTRO-MAGNETIC COMPATIBILITY

BS EN 61000-6-2
EMC Generic Immunity Standard for the Industrial Environment
BS EN 61000-6-4
EMC Generic Emission Standard for the Industrial Environment

ELECTRICAL SAFETY

BS EN 60950
Safety of Information Technology Equipment, including Electrical Business Equipment

TEMPERATURE

BS EN 60068-2-1
Ab/Ae Cold Test -30 °C BS EN 60068-2-2
Bb/Be Dry Heat +70°C

VIBRATION

BS EN 60068-2-6
Ten sweeps in each of three major axes
5 Hz to 8 Hz @ +/-7.5 mm, 8 Hz to 500 Hz @ 2 gn

SHOCK

BS EN 60068-2-27
Three shocks in each of three major axes 15 gn in 11 Ms

HUMIDITY

BS EN 60068-2-30
Db Damp Heat Cyclic 20/55 °C @ 95% RH 48 Hours
BS EN 60068-2-78
Cab Damp Heat Static 40 °C @ 93% RH 48 Hours

DEGREES OF PROTECTION PROVIDED BY ENCLOSURES BS EN 60529

IP65 – Front of module when installed into the control panel with the supplied sealing gasket.

SPECIFICATION

CONTINUOUS VOLTAGE RATING

8 V to 35 V Continuous

CRANKING DROPOUTS

Able to survive 0 V for 50 mS, providing supply was at least 10 V before dropout and supply recovers to 5 V. This is achieved without the need for internal batteries. LEDs and backlight will not be maintained during cranking.

MAXIMUM OPERATING CURRENT

112 mA at 12 V, 53 mA at 24 V

MAXIMUM STANDBY CURRENT

74 mA at 12 V, 35 mA at 24 V

DIMENSIONS OVERALL

355 mm x 369 mm x 90 mm
13.6" x 14.5" x 3.5"

PANEL CUT-OUT

286 mm x 326 mm x 93 mm
11.2" x 12.8" x 3.6"

MAXIMUM PANEL THICKNESS

8 mm
0.3"

LET'S DO THE WORK.™

www.cat.com/electricpower
©2023 Caterpillar
All rights reserved.
Materials and specifications are subject to change without notice.
The International System of Units (SI) is used in this publication. CAT, CATERPILLAR, LET'S DO THE WORK, their respective logos, "Caterpillar Corporate Yellow", the "Power Edge" and Cat "Modern Hex" trade dress as well as corporate and product identity used herein, are trademarks of Caterpillar and may not be used without permission.

LEHE2021-01 (03/23)

Image shown may not reflect actual package.

Pump Style Jacket Water Heater

Single Phase 2500 Watts Pump style jacket water heater is a complete coolant preheater.
It features an integrated pump that combines the benefits of forced circulation with a compact design that can mount to a variety of small engine applications. Forced circulation of the coolant delivers uniform heating throughout the entire engine, extends element life and offers a significant reduction in electrical consumption.

UL Listed , ULc Listed
240V
Installation provided with shut-off valves

www.Cat-ElectricPower.com

©2016 Caterpillar
All rights reserved.

Materials and specifications are subject to change without notice.
CAT, CATERPILLAR, their respective logos, “Caterpillar Yellow”, the “Power Edge” trade dress as well as corporate and product identity used herein, are trademarks of Caterpillar and may not be used without permission.

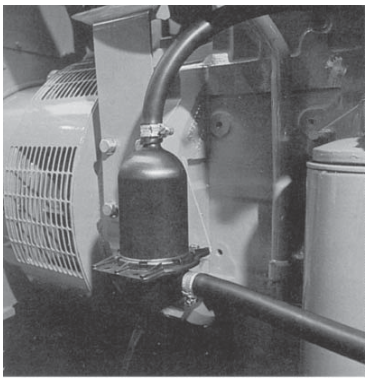

Picture shown may not represent actual package.

Coolant Heater

(WHH / WHHH / WHHA / JWH0089)

Appropriate when the generator set is to be sited in a low ambient environment, the heater maintains the engine coolant at a temperature [typically 38°C (100°F)] which facilitates rapid starting and load acceptance. The heater assembly uses UL compliant components (to UL1030) and has CSA certification which is to both CSA and UL Standards.

The heater itself is powered either by a 110/120 volt (VAC 120) for 60 Hz or 240V (VAC 240) for 50 Hz AC auxiliary supply protected by a safeguard breaker inside the main control panel. A thermostatic controller is included to regulate the output temperature to within safe limits. When the generator set is not running the heater is automatically connected to the AC supply through a power relay mounted in the control panel.

Upon receiving a start signal the AC supply is automatically disconnected by the power relay and automatically reconnected when the start signal is removed and the engine has stopped*.

Features

- Molded from Polyphenylene Sulphide
- Rust free, corrosion resistant with exceptional tensile strength
- Vibration and shock tested to extreme limits to ensure durability
- Compatible with all coolant additives
- Incoloy element for longer service life

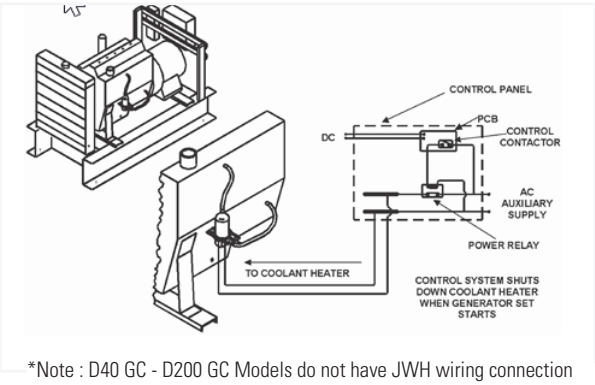

*Note : D40 GC - D200 GC Models do not have JWH wiring connection with the control panel and the JWH wiring connection is up to the customers..

VAC 120/240

Diesel Generator Set Engine Models	Nominal Coolant Heater Power Consumption (Watts)
C2.2, C4.4, C7.1	1000
C9, C13	1500
C15, C18	2500

Gas Generator Set Models	Nominal Coolant Heater Power Consumption (Watts)
DG30-2, DG50-2, DG60-2, DG80-2	1000
DG100-2, DG125-2, DG150-2	1500

©2024 Caterpillar. All rights reserved.
Materials and specifications are subject to change without notice. The International System of Units (SI) is used in this publication.
CAT, CATERPILLAR, LET'S DO THE WORK, their respective logos, "Caterpillar Corporate Yellow", the "Power Edge" and Cat "Modern Hex" trade dress as well as corporate and product identity used herein, are trademarks of Caterpillar and may not be used without permission.

LEHE4035-12 (05/24)

Cat® GC INTEGRAL FUEL TANKS

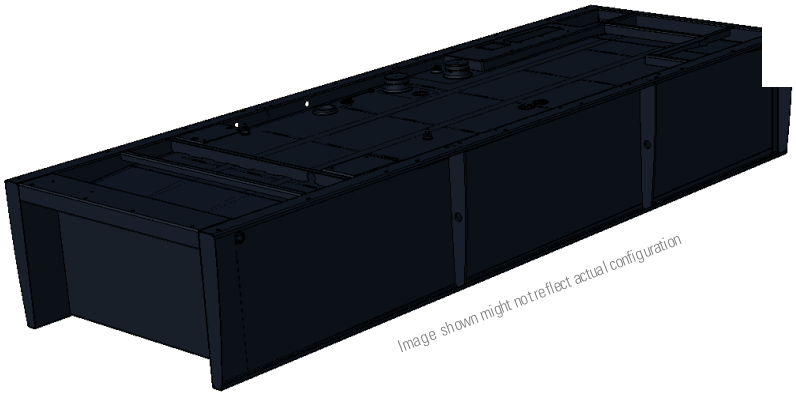

INTEGRAL FUEL TANKS

D250 GC – D600 GC

FEATURES

- UL Listed for United States (UL 142) and Canada (CAN/ULC S601)
- Facilitates compliance with NFPA 30 code, NFPA 37 and 110 standards and CSA C282 code
- Dual wall
- Low fuel level warning standard, customer configurable warning or shutdown
- Primary tank leak detection switch in containment basin
- Tank design provides capacity for thermal expansion of fuel
- Fuel supply dip tube is positioned so as not to pick up fuel sediment
- Fuel return and supply dip tube is separated by an internal baffle to prevent immediate re-supply of heated return fuel
- Pressure washed with an iron phosphate solution
- Interior tank surfaces coated with a solvent-based thin-film rust preventative
- Heavy gauge steel gussets with internal lifting rings
- Primary and secondary tanks are leak tested at 20.7 kPa (3 psi) minimum
- Compatible with open packages and enclosures
- Gloss black polyester alkyd enamel exterior paint
- Welded steel containment basin (minimum of 110% of primary tank capacity)
- Direct reading fuel gauge with variable electrical output
- Emergency vents on primary and secondary tanks are sized in accordance with NFPA 30.

INTEGRAL

- Integral diesel fuel tank is incorporated into the generator set base frame
- Robust base design includes linear vibration isolators between tank base and engine generator.

OPTIONS

- Audio/visual fuel level alarm panel
- 5gal (18.9 L) spill containment*
- Locking Fuel Fill
- Overfill prevention Valve*

*Applicable for D350GC-D600GC Models only

Integral Fuel Tank Base Useable Capacities with Fuel Tank Dimensions & Weights

Standby ekW	Width mm	Width in
250-300	1430	56.3
350-400	1630	64.1
450-500	1630	64.1
550-600	1865	73.4

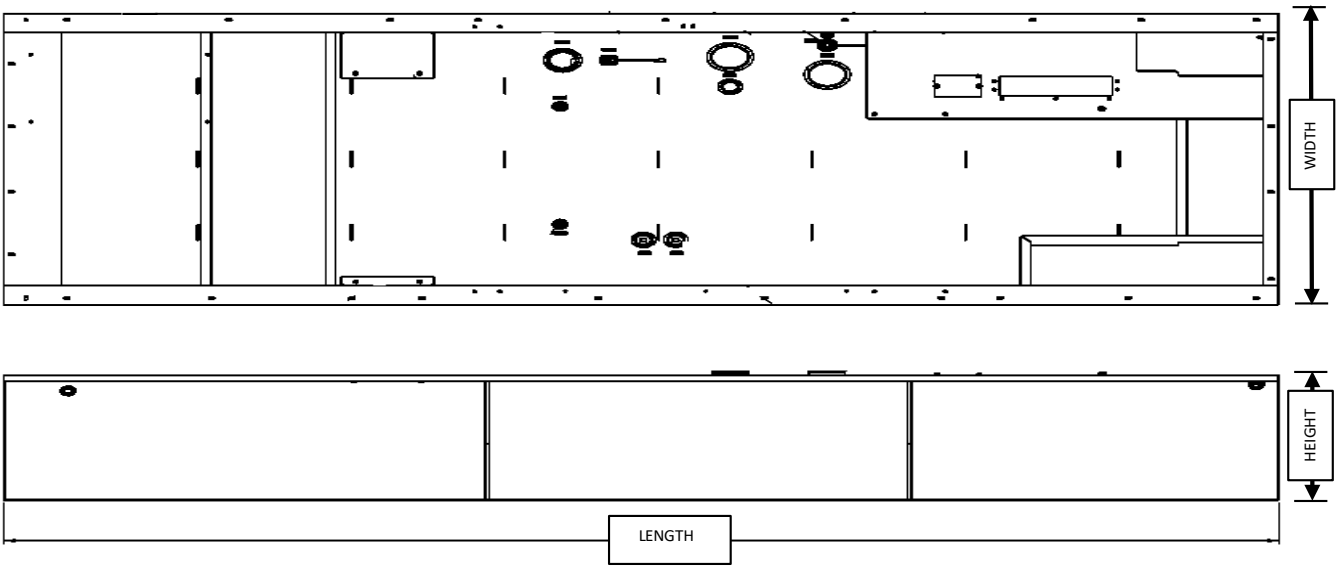

The heights listed above do not include lumber used during manufacturing and shipping

A. Open Set & Sound Attenuated Enclosure

Tank Design	Feature Code	Total Capacity		Useable Capacity		Tank Only						Overall Package Height with Tank			
						Dry Weight		Height 'H'		Length 'L'		Open		Enclosure	
		Litre	Gallon	Litre	Gallon	kg	lb	mm	in	mm	in	mm	in	mm	in
Integral Tank	FTDW035	2270.7	599.8	2059.9	543.9	970	2138	762.4	30.0	3958	155.8	2202	86.7	2487	97.9
	FTDW036	2820	744.9	2553	674.4	1165	2568	818.8	32.2	4625	182.1	2584	101.7	2644	104
	FTDW037	3671	969.7	3323	877.8	1331	2934	668.2	26.3	4622	181.9	2456	96.7	2644	104
	FTDW038	4292	1133.8	3889	1027.3	1657	3653	816.4	32.1	4980	196	2560	100.7	2721	107.1

B. Estimated Run Time (Hours)

Tank Design	Feature Code	Standby Ratings (kVA)						
		ekW	100%		75%		50%	
			Hrs	L/hr	Hrs	L/hr	Hrs	L/hr
Integral Tank	FTDW035	250	28.1	73.3	35	58.8	47	43.8
		300	24	86.0	30.8	66.8	40	51.5
	FTDW036	350	27.1	94.3	31.2	81.9	42.4	60.2
		400	24.1	105.9	28.1	90.7	38.6	66.2
	FTDW037	450	25.2	131.7	31.3	106.1	42.0	79.1
		500	24.3	137	30.1	110.5	46.6	71.3
	FTDW038	550	25.7	151.1	32.9	118.1	45.2	86.1
		600	24.1	161.6	30.0	129.6	42.4	91.7

Tanks with full electrical stub-up area include removable end channel. Tanks with RH stub-up include stubup area directly below the circuit breaker or power terminal strips.

Fuel tanks and applicable options facilitate compliance with the following United States NFPA Code and Standards:

NFPA 30: Flammable and Combustible Liquids Code

NFPA 37: Standard for the Installation and Use of Stationary Combustion Engines and Gas Turbines

NFPA 110: Standard for Emergency and Standby Power Systems

Fuel tanks and applicable options facilitate compliance with the following Canadian Standard and Code:

CSA C282 – Emergency Electrical Power Supply for Buildings

CSA B139-09 – Installation Code for Oil-Burning Equipment

www.Cat.com/electricpower
©2021 Caterpillar All rights reserved. Materials and specifications are subject to change without notice. The International System of Units (SI) is used in this publication. CAT, CATERPILLAR, their respective logos, "Caterpillar Corporate Yellow", the "Power Edge" and Cat "Modern Hex" trade dress as well as corporate and product identity used herein, are trademarks of Caterpillar and may not be used without permission.

FUEL LEVEL ALARMS - FSS

CRITICAL LOW FUEL LEVEL SHUTDOWN AND LOW FUEL LEVEL ALARM

These options provide an alarm on low fuel level and a shutdown on critical low fuel level. This warning is reported by an indicator light on the control panel with an audible alarm also available as an option. This warning can additionally be relayed to a remote annunciator.

Note: Standard Fuel Fill, UL Rated Emergency-vent, Standard vent, Fuel Sender & Leak Detection Probe are included as standard on generator sets fitted with UL Listed fuel tanks.

CRITICAL HIGH FUEL LEVEL ALARM

This option provides an alarm on critical high fuel level. This warning is reported by an indicator light on the control panel with an audible alarm also available as an option. This warning can additionally be relayed to a remote annunciator.

Information contained in this publication may be considered confidential. Discretion is recommended when distributing.
Materials and specifications are subject to change without notice.
CAT, CATERPILLAR, LET'S DO THE WORK, their respective logos, "Caterpillar Corporate Yellow," the "Power Edge" and Cat "Modern Hex" trade dress as well as corporate and product identity used herein, are trademarks of Caterpillar and may not be used without permission.

www.cat.com/electricpower
©2020 Caterpillar
All rights reserved.

Attachments

Image shown might not reflect actual configuration.

BATTERY CHARGER

The intelligent battery charger has been developed with safety, usability, optimised battery performance and maximum battery lifetimes in mind.

A comprehensive range of input and output protections ensures a continued safe charging environment also enabling the use of the charger as a power supply.

FEATURES

- Intelligent two, three and four stage charging profiles
- Configurable to suit most battery types (12V/24V)
- Adjustable current limit
- Can be used as a battery charger, power supply or both at the same time
- Automatic or Manual boost and storage charge functions to help maintain battery condition
- Digital Microprocessor Technology
- Temperature compensation for battery charging
- Low Output Ripple and superb line regulation
- Three LED Indicators
- AC input Under voltage
- AC input Over voltage
- Battery charger output Over voltage
- Battery charger output Over current
- Optional battery temperature compensation with over temperature protection
- Output short circuit and Inversion polarity with auto recovery
- Configurable charge termination
- UL1236 /UL1564 Compliant

Automatic Boost Mode
- Boosts and equalises cell charge improving battery performance and life

Power Save Mode
- Once the battery is fully charged the chargers switch to Eco-Power to save energy

Communication
- Can be integrated into external systems through MODBUS RTU using RS485
- Fully configurable via PC Software

BENEFITS

- Fully flexible to maximise the life of the battery
- Suitable for a wide range of battery types
- Switched mode design
- Minimum 86% efficiency throughout full operating range
- No external intervention for boost mode
- Multiple chargers can be linked together to provide larger current output
- Can be permanently connected to battery and mains (utility) supply. No need to disconnect through high load conditions.

SPECIFICATION

AC SUPPLY
VOLTAGE RANGE 90 V to 305 V (L-N)

FREQUENCY RANGE
48 Hz to 64 Hz (L-N)

DC OUTPUT RATING
10 A DC at 24 V DC

RIPPLE AND NOISE
<1%

EFFICIENCY
>86%

REGULATION LINE
<0.5%

LOAD
2%

TEMPERATURE SENSOR INPUT
PT1000

PROTECTIONS
Short Circuit
DC Over Voltage
DC Over Current
Reverse Polarity
Over Temperature
AC Under & Over Voltage

CHARGE FAILURE RELAY
3 A at 30 V DC volt free relay

DIMENSIONS OVERALL
70 mm x200 mm x 130 mm
2.7" x 7.9" x 5.1"

WEIGHT
0.75 kg

OPERATING TEMPERATURE RANGE
-30 °C to +80 °C
-22 °F to +176 °F

STORAGE TEMPERATURE RANGE
-30 °C to +80 °C
-22 °F to +176 °F

www.cat.com/electricpower

©2024 Caterpillar
All rights reserved.
Materials and specifications are subject to change without notice.
The International System of Units (SI) is used in this publication. CAT, CATERPILLAR, LET'S DO THE WORK, their respective logos, "Caterpillar Corporate Yellow" the "Power Edge" and Cat "Modern Hex" trade dress as well as corporate and product identity used herein, are trademarks of Caterpillar and may not be used without permission.

LEHE2022-03 (01/24)

Cat® Batteries

Cat Batteries – Greater Starting Power – Lower Maintenance – Longer Life

Cat Premium High Output (PHO) batteries are used in all Caterpillar Machines and Engine Gen-Sets. They are designed to meet stringent Caterpillar design specifications, which provide industry leading cold cranking amp (CCA) capability and maximum vibration resistance.

Maintenance Free or low maintenance designs are available in wet and dry configurations.

General Service Line batteries are available in Maintenance Free or low maintenance designs and in wet or dry configurations. Wide selections of BCI group sizes are available for automotive, light truck, bus, industrial, agricultural, marine, recreational and valve regulated (VRLA-AGM & Gel) applications.

Caterpillar. The difference counts.™

Cat Dealers define world – class product support. We offer you the right parts and service solutions, when and where you need them.

The Cat Dealer network of highly trained experts keeps your entire fleet up and running to maximize your equipment investments.

CATERPILLAR®

World's Toughest Batteries

Premium High Output – Maximum Vibration Resistance

- Vibration Resistance...five times the Industry Standard
- Exclusive "flat top" BCI group 4D & 8D batteries are Maintenance Free and have the industries highest cold cranking amps (CCA)
- Popular BCI group 31 Maintenance Free batteries with industry leading cold cranking amps...up to 1000 (CCA), for electric power, machine or on-highway truck and bus applications. Deep cycle models available for truck, marine or recreational usage

Specifications for Cat Premium High Output Batteries – Available Worldwide

									BCI Overall Dimensions				Nominal Weight	
BCI Group Size	Part No.	Cold Cranking Amps"	Reserve Capacity Minutes'	Volts	Amp Hr. Capacity @ 20 Hrs.	Construction	Add Water Maintenance Check Hours	Length In (mm)	Width In (mm)	Height In (mm)	Wet Lb (kg)	Dry Lb (kg)	Nominal Acid to Fill Qt (liter)
8D	153-5720	1500	465	12	210	C	MF	20.47 (520)	10.8 (275)	9.76 (248)	132 (60)	–	–
8D	101-4000	1400	400	12	190	LAC+	1000	20.7 (526.5)	10.96 (278)	9.76 (248)	132 (60)	86 (39)	18.0 (17.0)
4D	153-5710	1400	425	12	200	C	MF	20.47 (520)	8.58 (218)	9.76 (248)	119 (54)	–	–
4D	153-5700	1125	305	12	145	C	MF	20.47 (520)	8.58 (218)	9.76 (248)	101 (46)	–	–
4D	9X-9730	1300	400	12	190	LAC+	1000	20.75 (527)	8.58 (218)	9.76 (248)	119 (54)	81 (37)	14.8 (14.0)
4D	9X-9720	1000	275	12	140	LAC+	1000	20.75 (527)	8.58 (218)	9.76 (248)	101 (46)	59 (27)	15.9 (15.0)
31	175-4390	1000	180	12	90	C/S	MFA	12.9 (328.4)	6.74 (171.2)	9.29 (236)	60 (27)	–	–
31	175-4370	825	190	12	100	C/S**	MFA	12.9 (328.4)	6.74 (171.2)	9.29 (236)	60 (27)	–	–
31	175-4360	710	185	12	100	C/S***	MFA	12.9 (328.4)	6.74 (171.2)	9.29 (236)	60 (27)	–	–
31	**250-0480**	710	185	12	100	C/SDT***	MF	12.9 (328.4)	6.74 (171.2)	9.29 (236)	60 (27)	–	–
31	115-2422	1000	170	12	90	C SAE	MFA	12.9 (328.4)	6.74 (171.2)	9.46 (240.3)	60 (27)	–	–
31	115-2421	950	170	12	90	C SAE +	MFA	12.9 (328.4)	6.74 (171.2)	9.46 (240.3)	60 (27)	44 (20)	6.6 (6.2)
31	9X-3404	950	165	12	100	C SAE	MF	13 (330.2)	6.77 (172)	9.46 (240.3)	58 (26)	–	–
31	3T-5760	750	165	12	100	C SAE	MF	13 (330.2)	6.77 (172)	9.46 (240.3)	55 (25)	–	–
24	153-5656	650	110	12	52	SC	MF	10.98 (278.9)	6.85 (174)	9.0 (229.1)	39 (18)	–	–
65	230-6368	880	140	12	80	SC	MF	11.9 (303.4)	7.5 (190.8)	7.5 (191.4)	45.5 (21)	–	–
74	153-5660	650	110	12	52	SC*	MF	10.98 (278.9)	7.0 (178.2)	8.15 (206.9)	39 (18)	–	–
58	175-4280	500	70	12	35	SC	MF	9.96 (253.1)	7.2 (182.5)	6.9 (176)	31 (14)	–	–
2	153-5690	765	210	6	90	LAC+	1000	10.24 (260)	6.8 (173)	8.72 (221.6)	37 (17)	22 (10)	4.8 (4.5)

Construction Notes:
LAC = Low Maintenance, Hybrid Construction
C = Calcium Lead Alloy Grid Design
MF = Maintenance Free
MFA = Maintenance Free with Accessible Vent Caps
S = Stud Terminals
+ = Shipped Dry Only
* = Side Terminals
** = Starting and Deep Cycle Battery
*** = Deep Cycle and Starting Battery
" = For 30 seconds at 0° F (-18° C)
' = Minimum of 25 amp output at 80° F (27° C)
SAE = Uses SAE Posts
SDT = Dual, Top mounted Terminals, Stud and SAE Post, Marine Deep Cycle/Starting Battery
SC = Silver (Ag) Calcium Alloy Grids for resistance to high underhood temperatures

Rugged Design – Built Tough – Reliable Starting

- Positive and Negative plates are anchored to container bottom and locked at the top of cell element for maximum vibration resistance.
- Heavy-duty forged terminal post bushings provide maximum strength and resistance to acid seepage.
- Hefty full-frame grids, no sharp edges, optimum acid/paste combination provides better charge acceptance after deep discharge.
- Manifold vented cover with built-in Flame Arrestor…a safety feature that directs corrosive gases away from the battery and hold-downs.
- Thick, robust container resists rugged treatment typical of heavy-duty commercial use. Embossed part number & descriptors for easy serviceability.

Cat Batteries

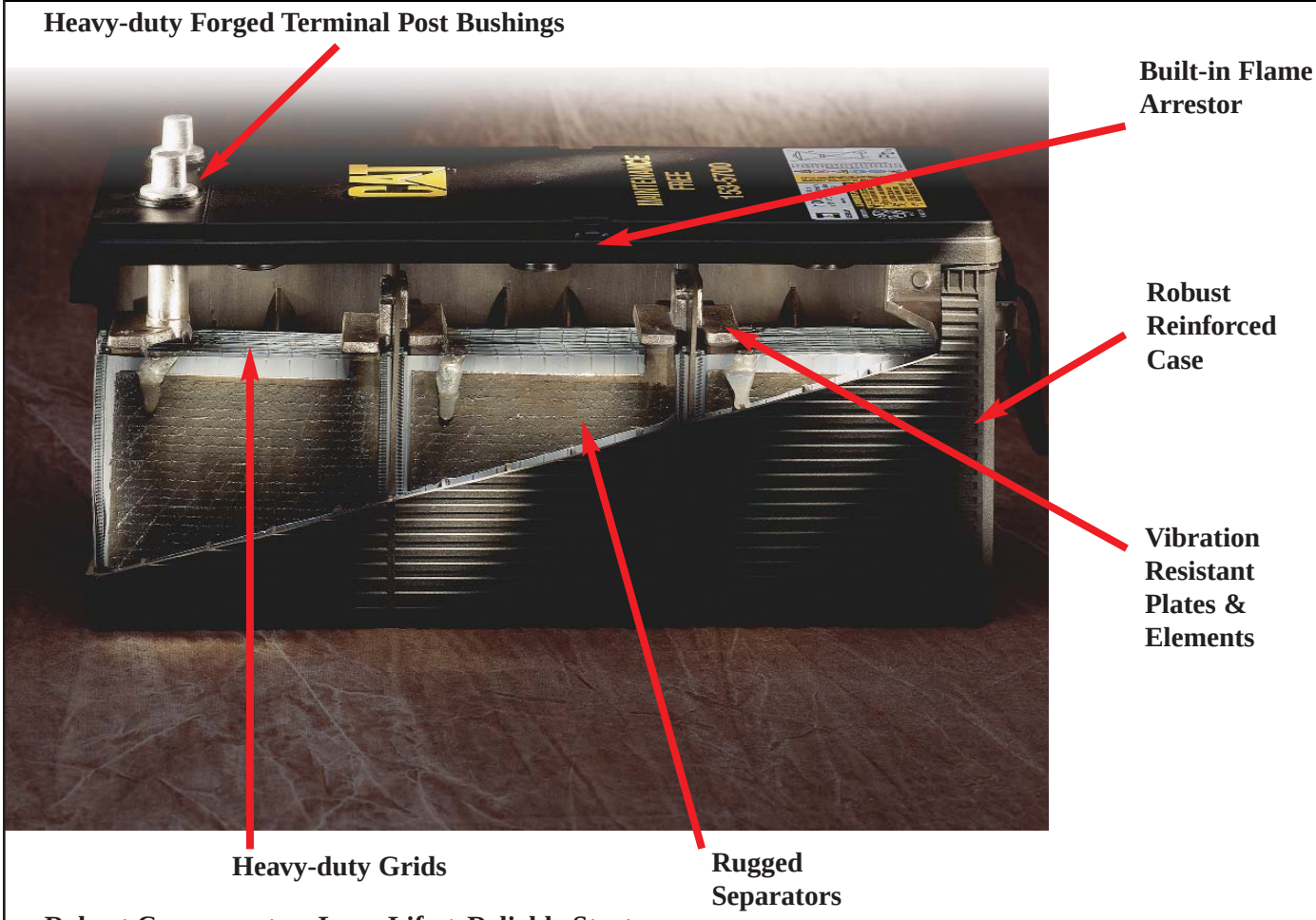

Robust Components = Long Life + Reliable Starts

- Heavy-duty forged terminal post bushings provide maximum strength and resistance to acid seepage that causes corrosion and black posts. Thicker internal terminal posts provide lower electrical resistance and higher cold cranking amp output.
- Rugged microporous polyethylene envelope separators protect against “shorts” and vibration damage. Deep Cycle batteries utilize double insulated Glass mat separators for longer cycling life.
- Maintenance Free batteries utilize calcium lead alloy on both positive and negative plates that reduces gassing and water consumption. Automotive batteries have Silver (Ag) Calcium Alloy Grids for resistance to high underhood temperatures.
- Heavy-duty, full frame battery grids with no sharp edges. An optimum acid/paste combination provides better charge acceptance after a deep discharge.
- Positive and Negative plates are anchored to the container bottom and the cell element is locked at the top for maximum vibration resistance. Straps are thicker, heavier and cast (not welded) into the plates.
- Manifold vented cover with built-in Flame Arrestor…a safety feature that directs corrosive gases away from the battery and hold-downs.
- Robust reinforced case provides extra strength in all temperature extremes. Brickwork design on sides reduces chance of punctures and case flexing. Embossed part number and descriptors for easy serviceability.

CAT, CATERPILLAR, their respective logos and “Caterpillar Yellow,” as well as corporate and product identity used herein, are trademarks of Caterpillar and may not be used without permission.

For more information, see us today or visit our web site at www.cat.com

Caterpillar. The difference counts.™

CATERPILLAR®

PEHJ0073-01 Printed in the U.S.A. © 2005 Caterpillar All Rights Reserved

Circuit Breakers [C9, C13, C15, C18]

D250 GC, D300 GC, D350 GC, D400 GC, D450 GC, D500 GC, D550 GC, D600 GC

Manually Operated Circuit Breakers

Current (A)	Frame	Number of Poles	Interrupting Ratings (kA ms)			Trip Unit	(Lugs) Cable Size Range / Phase	Auxilliary Options
			240V	480V	600V			
100	XT2	3	65	25	18	Electronic LS/I or LSI	14-1/0 AWG	1 Form C + 1 Bell Alarm Shunt Trip 24VDC
250	XT4	3	65	25	18	Electronic LS/I or LSI	14-1/0 AWG	1 Form C + 1 Bell Alarm Shunt Trip 24VDC
400	XT5	3	65	35	18	Electronic LS/I or LSI	4/0 AWG	1 Form C + 1 Bell Alarm Shunt Trip 24VDC
600	XT6	3	65	35	20		(3) 2/0 – 400 kcmil	
800	XT6	3	65	35	20		(3) 2/0 – 400 kcmil	
1200	XT7	3	65	50	25		(4) 4/0 – 500 kcmil	1 Form C + 1 Bell Alarm Shunt Trip 24VAC/VDC

1st Breaker Options (400 – 1200A)

Model	Current (A)	Operation
C9, C13, C15	400	Manually Operated
C9, C13, C15, C18	600	Manually Operated
C9, C13, C15, C18	800	Manually Operated
C9, C18	1200	Manually Operated

1st Breaker FLC Capacity or one frame less than FLC capacity except when 1st breaker is 400 A.

2nd Breaker Options

Model	Current (A)	Operation
C9, C13, C15, C18	100 / 250	Manually Operated

2nd Breaker either 100A or 250A.

XT6 Ekip Dip LSI
L-S-I Functions

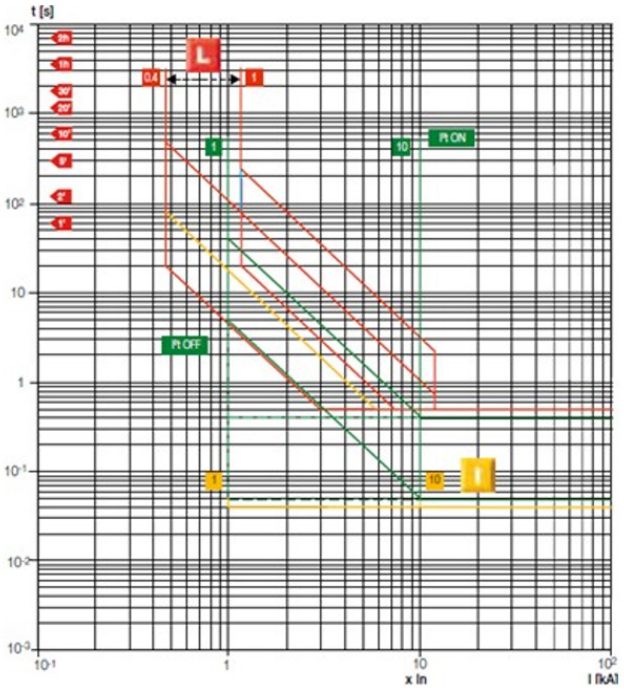

Figure 5

Anti-Condensation Heater

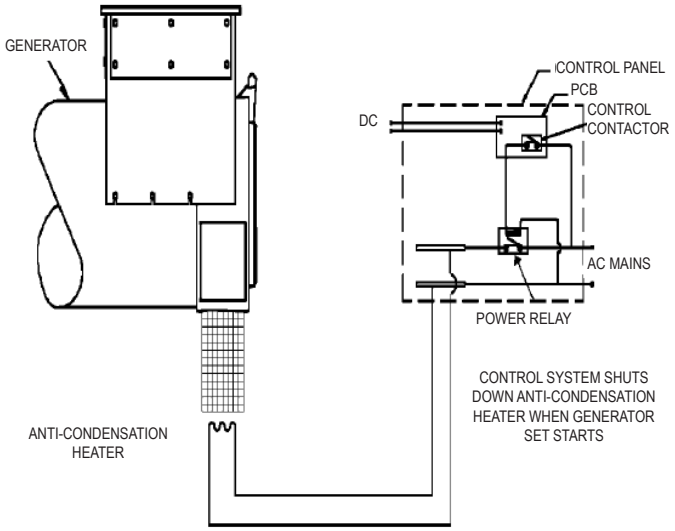

Generator Anti-condensation Heater AH1H

Appropriate when the generator set is to be sited in a low ambient and/or high humidity environment, theheater maintains the AC generator at a suitable temperature to prevent winding corrosion due to condensation.

The heater itself is powered by a 110/120 volt (VAC 120) or 208/240 volt (VAC 240) AC auxiliary supply protected by a fuse inside the main control panel. When the generator set is not running the heater is automatically connected to the AC supply through a power relay mounted in the control panel. Upon receiving a start signal the AC supply is automatically disconnected by the power relay and automatically reconnected when the start signal is removed and the engine has stopped.

Generator Frame	Nominal Heater Power Consumption (Watts)
LC15XX, M17XX, M14XX	60
LC31XX, M22XX	100
LC50XX, M27XX	250

LET'S DO THE WORK.™

www.cat.com/electricpower
©2023 Caterpillar
All rights reserved.
Materials and specifications are subject to change without notice.
The International System of Units (SI) is used in this publication.
CAT, CATERPILLAR, LET'S DO THE WORK, their respective logos, "Caterpillar Corporate Yellow" the "Power Edge" and Cat "Modern Hex" trade dress as well as corporate and product identity used herein, are trademarks of Caterpillar and may not be used without permission.

LEHE4017-03 (04/23)

Image shown may not reflect actual configuration.

Remote Emergency Stop Button

Features and Benefits

- Enclosure degree of protection – IP 69K (NEMA 6)
- UL Listed (NKCR)
- Assembled enclosure with shroud
- 40 mm mushroom emergency stop
- Twist release
- 2NC – horizontally mounted

Dimensions

- Net Width: 0.065 m
- Net Height: 0.078 m
- Net Depth: 0.065 m
- Net Weight: 0.124 kg

www.Cat-ElectricPower.com
©2020 Caterpillar
All rights reserved.

Materials and specifications are subject to change without notice.
. CAT, CATERPILLAR, LET'S DO THE WORK, their respective logos, "Caterpillar Corporate Yellow", the "Power Edge" and Cat "Modern Hex" trade dress as well as corporate and product identity used herein, are trademarks of Caterpillar and may not be used without permission

Image shown may not reflect actual configuration.

20A Tamper-Resistant, Weather-Resistant GFCI Receptacles

Features and Benefits

- Automatically tests the GFCI every time the reset button is pushed in. The GFCI will not reset if the GFCI circuit is not functioning properly.
- By blocking reset of the GFCI if protection has been compromised, SmartLockPRO reduces the possibility of end-users incorrectly assuming that a reset GFCI outlet is providing ground fault protection when it actually is not.
- A line-load reversal diagnostic feature is provided which prevents the GFCI from being reset and stops power from being fed to the GFCI receptacle face or through to downstream devices. A green LED indicator on the GFCI's face also illuminates to alert the installer to the line-load wiring reversal.

Weather-Resistant GFCIs

- Meet UL 498 requirements for weather-resistant receptacles.

Tamper-Resistant GFCIs

- Shutter mechanism inside the receptacle blocks access to the contacts unless a two-prong plug is inserted, helping ensure foreign objects will be locked out.

Product Features

- Grounding: GFCI ground fault
- Feature: Weather and tamper-resistant
- Amperage: 20 Amp
- Voltage: 125 Volt
- NEMA: 5-20R
- Trip Level: Class A, 5mA plus or minus 1mA
- Pole: 2
- Wire: 3
- Color: White

Standards and Certifications

- NEMA: WD-6
- ANSI: C-73
- UL498: File E13399
- CSA C22.2 No. 42: File LR-57811
- NOM: 057
- UL 943: File E48380

Receptacles contained in a weather resistant box and in-use cover.

www.Cat-ElectricPower.com

©2016 Caterpillar
All rights reserved.

Materials and specifications are subject to change without notice. CAT, CATERPILLAR, their respective logos, "Caterpillar Yellow", the "Power Edge" trade dress as well as corporate and product identity used herein, are trademarks of Caterpillar and may not be used without permission.

Cat® GC ENCLOSURES

Image shown may not reflect actual configuration.

D250 GC – D600 GC Sound Attenuated Enclosures

60 Hz

Features

Robust/Highly Corrosion Resistant Construction

- Safeguards genset against environmental and weather conditions
- Factory installed on skid base or tanks base
- Environmentally friendly, polyester powder baked paint
- Enclosure constructed with 18-gauge steel
- Interior zinc plated fasteners
- Internally mounted exhaust silencing system
- Comply with ASCE /SEI 7 for Wind loads up to 100 mph
- Designed and tested to comply with UL 2200 Listed generator set package

Excellent Access

- Large cable entry area for installation ease
- Accommodates side mounted single or multiple breakers
- Two doors on both sides
- Vertically hinged allow 180° opening rotation
- Radiator fill cover

Security and Safety

- Lockable access doors which give full access to control panel and breaker
- Cooling fan and battery charging alternator fully guarded
- Fuel fill, oil fill and battery can only be reached via lockable access
- Externally mounted emergency stop button (Optional)
- Designed for spreader bar lifting to ensure safety
- Stub-up area is rodent proof

Sound Attenuated Level 2

- Caterpillar white paint
- UL Listed integral fuel tank with 24 hours running time capacity (Optional)
- DC lighting package (Optional)

Enclosure Package Operating Characteristics

Enclosure Type	Standby	Cooling Air Flow Rate		Ambient Capability*		Sound Pressure Levels (dBA) at 7m (23 ft)
	ekW	m^3/s	cfm	°C	°F	100% Load
Level 2 Sound Attenuated Enclosure (Steel)	250	6.4	13561	57	135	74
	300	6.4	13561	51	125	74
	350	7.4	15680	57	134	71
	400	7.4	15680	53	127	71
	450	8.4	17692	54	130	73
	500	8.4	17692	50	122	73
	550	11.2	23731	56	133	73
	600	11.2	23731	53	127	73

*Cooling system performance at sea level. Consult your Cat® dealer for site specific ambient and altitude capabilities.
Note: Sound level measurements are subject to instrumentation, installation and manufacturing variability, as well as ambient site conditions

Cat® GC ENCLOSURES

Weights and Dimensions

Enclosure Type	Standby Ratings	Length, L		Width, W		Height, H		Package Weights	
	ekW	mm	in	mm	in	mm	in	kg	lb
Sound Attenuated Enclosure on Skid Base	250	3958	155.8	1440	56.7	1991	78.4	2857	6298.6
	300							2945	6492.6
	350	4633	182.4	1630	64.2	2227	87.7	3983	8781.0
	400							4017	8856.0
	450	4823	189.8	1630	64.2	2227	87.7	4408	9718.0
	500							4457	9826.0
	550	4980	196.1	1865	73.4	2172	85.5	4754	10480.8
	600							4837	10663.8
Sound Attenuated Enclosure on UL Listed Integral Fuel Tank Base	250	3958	155.8	1440	56.7	2487	97.9	3497	7709.6
	300							3585	7903.6
	350	4633	182.4	1630	64.2	2644	104.1	4765	10505.0
	400							4799	10580.0
	450	4823	189.8	1630	64.2	2777	109.3	5345	11783.7
	500							5394	11891.7
	550	4980	196.1	1865	73.4	2723	107.2	5973	13168.2
	600							6056	13351.2
Sound Attenuated Enclosure on UL Listed Extended Integral Fuel Tank Base	250	4608	181.4	1430	56.3	2379	93.7	3590	7914.6
	300							3678	8108.6
	350	5251	203.7	1620	63.8	2561	100.8	4876	10749.7
	400							4910	10824.7
	450	5909	232.6	1620	63.8	2612	102.8	5497	12118.8
	500							5546	12226.8
	550	6759	266.1	1865	73.4	2487	97.9	6237	13750.2
	600							6320	13933.2

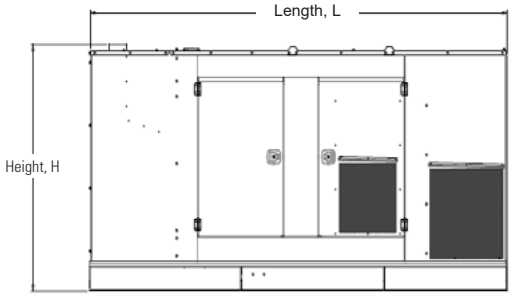

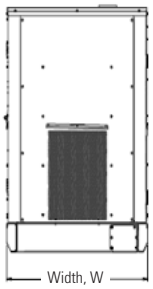

Sound Attenuated Enclosure on Skid Base

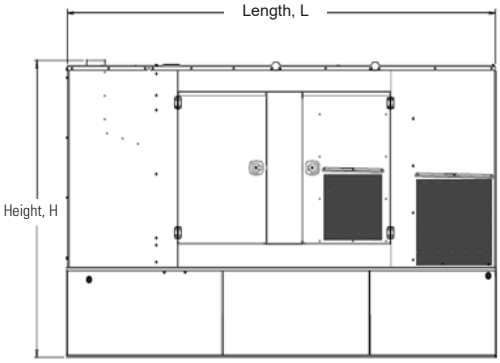

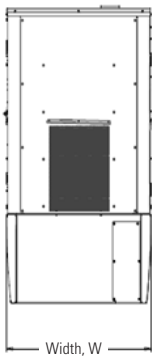

Sound Attenuated Enclosure on a UL Listed Integral Fuel Tank Base

Image shown may not reflect actual configuration

LET'S DO THE WORK.™

www.cat.com/electricpower

©2023 Caterpillar
All rights reserved.
Materials and specifications are subject to change without notice.
The International System of Units (SI) is used in this publication. CAT, CATERPILLAR, LET'S DO THE WORK, their respective logos, "Caterpillar Corporate Yellow", the "Power Edge" and Cat "Modern Hex" trade dress as well as corporate and product identity used herein, are trademarks of Caterpillar and may not be used without permission.

LEHE2014-06 (08/23)

Cold Weather Package

Cold weather events are often the cause for a utility power outage. For that reason, generator set preparedness is especially important in low temperature environments.

The Cold Weather Package enables the generator set to start easier during cold temperatures, increasing reliability under harsh, wintery conditions.

The factory installed Cold Weather Package, available with our Sound Attenuated enclosures, means your generator set will arrive on-site ready for operation.

Features:

Door Inlet Actuator (for Damper control)

Canopy Air Inlet Actuator (for Damper control)

Gravity and Air Inlet Dampers

Pump Style Jacket Water Heater

Horizontal/Downflow Space Heaters

UL 10 Amp Battery Charger

125A Load Center

Door Inlet Actuator

Image shown may not reflect actual package.

Operation

The actuators provide true spring return operation for reliable fail-safe application and positive close off on air tight dampers. The spring return system provides consistent torque to the damper with, and without, power applied to the actuator.

TECHNICAL DATA

Power supply		24 VAC ± 20% 50/60 Hz 24 VDC ± 10%
Power consumption	**running**	5 W
	holding	2.5 W
Running time (nominal)	**motor**	< 40 to 75 sec
	spring	< 25 sec @-4°F to 122°F [-20°C to 50°C] < 60 sec @-22°F [-30°C]
Humidity		5 to 95% RH non-condensing
Ambient temperature		-22°F to 122°F [-30°C to 50°C]
Housing		NEMA type 2 / IP54
Housing material		zinc coated steel
Agency listings		cULus acc. to UL 873 and CAN/CSA C22.2 No. 24-93

Image shown may not reflect actual package.

Canopy Air Inlet Actuator

Operation

The actuators provide true spring return operation for reliable failsafe application and positive close off on air tight dampers. The spring return system provides constant torque to the damper with, and without, power applied to the actuator.

TECHNICAL DATA

Power supply		24 VAC ± 20% 50/60 Hz 24 VDC +20% / -10%
Power consumption	**running**	6 W
	holding	2.5 W
Running time (nominal)	**motor**	< 40 to 75 sec
	spring	< 25 sec @-4°F to 122°F [-20°C to 50°C] < 60 sec @-22°F [-30°C]
Humidity		max. 95% RH non-condensing
Ambient temperature		-22°F to 122°F [-30°C to 50°C]
Housing		Nema 2, IP54, Enclosure Type2
Housing material		zinc coated metal and plastic casing
Agency listings		cULus acc. to UL60730-1A/-2-14, CAN/CSA E60730-1:02, CE acc. to 2004/108/EC & 2006/95/EC

Gravity and Inlet Dampers

Image shown may not reflect actual package.

Gravity Damper

- Wide operating range – velocities up to 3000 fpm
- Corrosion resistant galvanized steel construction standard
- Mechanically locked blade seals

Air Inlet Dampers

- Blades constructed of AA5052 aluminum
- Shafts constructed of AA6061 aluminum.

Horizontal/Downflow Space Heaters

Image shown may not reflect actual package.

FEATURES

- Horizontal and downflow capability
  - One unit mounts either horizontally or vertically.
  - Louvers adjust up and down for control of throw direction.
  - Louvers have stops to prevent complete closing of the discharge area.
- 5 kW
- UL Listed & ULc Listed

Elements

- Aluminum-finned, copper clad steel sheath heating element has longer useful life, because of cooler sheath temperature and faster heat dissipation.
- Pull-through air flow design draws air across heating element for more even air distribution and cooler element operation.

Thermal cutout

Automatic reset linear thermal cut-out capillary type, provides protection over entire length of element area.

Volts	KW	Amps	PH	2-Stage Element	Std. Control Volts	Air Delivery CFM	FPM	T (F)	Motor RPM	HP	Horiz. Air Throw	Ship. WT)
208/240	3.7/5.0	18.0/21.0	1-3	5A	208/240	350	800	45	1600	1/100	12	24

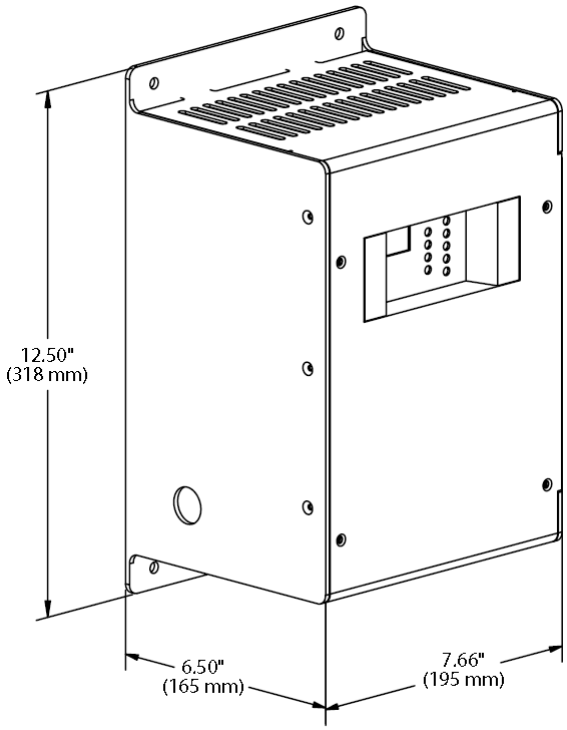

Image Shown may not Reflect Actual Package

UL 10 Amp Battery Charger

Output		Input	
Amps	Volts	Hz	Volts
10	24	50/60	110-120 208-240

Width	Depth	Height	Weight
195 mm (7.66")	165 mm (6.50")	318 mm (12.50")	10.4 kg (23 lb)

FEATURES

- Electronically current limited at 105% of rated output
- Alarm system
- Digital Display
- Lightning and voltage transient protection
- Protection of connected equipment
- Constant voltage, current limited, 4-rate automatic equalization
- IP 20 housing
- AC isolated from DC
- Temperature Compensation
  - On board temperature sensor with remote port
- Auto AC line compensation
- Output regulated by sensed battery voltage

SPECIFICATION

Input Supply	110-120 V 208-240 V
AC and DC Fuses	2 input and 2 output)
Output voltage	24V
Frequency	50/60 Hz
Operating temperature	-20°C (-4°F) to +60°C (140°F)

Housing constructed of rustproof anodized aluminum.

STANDARDS

- C-UL listed to UL 1236
- NFPA 70, NFPA 110
- CSA 22.2 No 107 certified
- UL 1564
- CE DOC to EN 60335
- IBC Seismic Certification

OPTIONS

NFPA 110 alarm package as follows:

AC on	Green led (indication)
AC fail	Red led and form C contact (2A)
Float mode	LED
Fast charge	LED
Temp comp active	LED
Low battery volts	Red LED & Form C contact
High Battery Volts	Red LED & Form C contact
Charger fail	Red LED & Form C contact
Battery fault	Red LED & Form C contact

- Battery disconnected
- Battery polarity reversed
- Mismatched charger battery voltage
- Open or high resistance charger to battery connection
- Open battery cell or excessive internal resistance

Cold Weather Package

125A Load Center

Image shown may not reflect actual package.

SPECIFICATION

Line Rated Current	125 A
Number of spaces	8
Number of circuits	16
Number of tandem circuit breakers	8
System Voltage	120/240 V AC
NEMA degree of protection	NEMA 3R outdoor
Electrical connection	Lugs
Wiring configuration	3-wire
Material	Tin plated aluminium busbar
Enclosure material	Galvannealed steel
Cover finish	Gray baked enamel
Product certifications	UL Listed

www.Cat-ElectricPower.com

©2016 Caterpillar
All rights reserved.

Materials and specifications are subject to change without notice.
CAT, CATERPILLAR, their respective logos, “Caterpillar Yellow”,
the “Power Edge” trade dress as well as corporate and product identity used
herein, are trademarks of Caterpillar and may not be used without permission.

LEHE1087-00 (5-16)

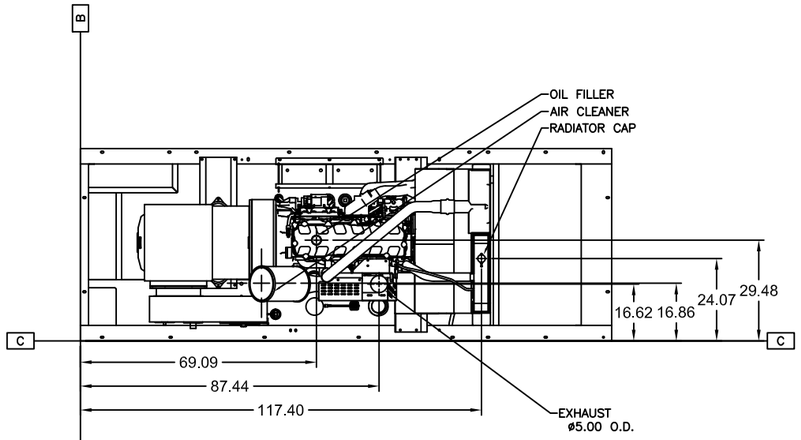

TOP VIEW

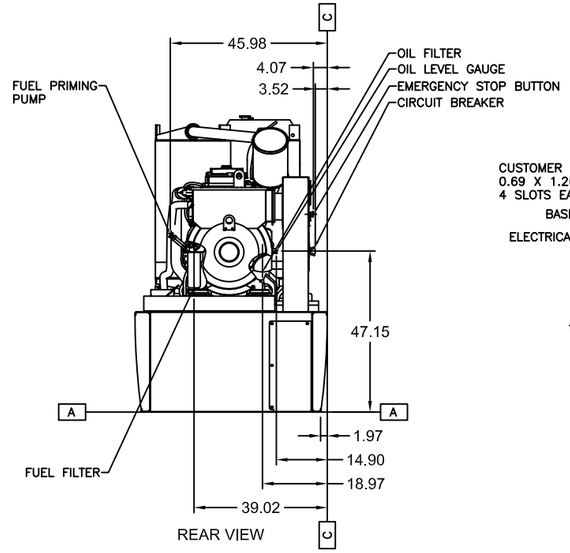

REAR VIEW

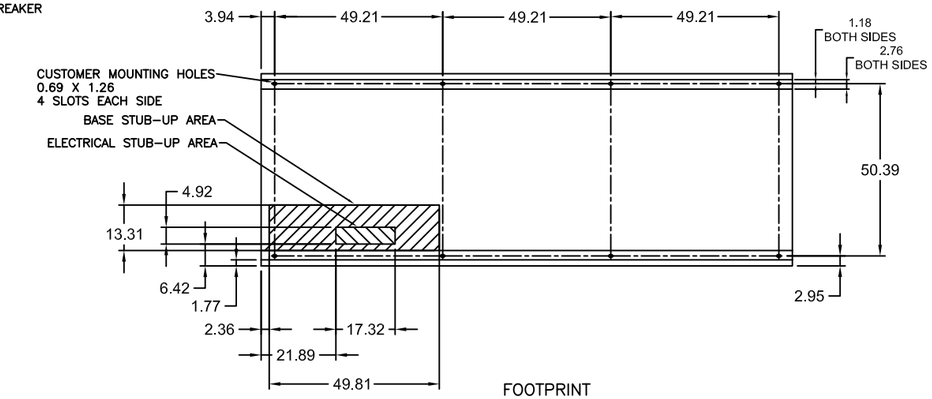

FOOTPRINT
(DIMENSIONED OUTLINE VIEW FROM ABOVE)
(RIGHT SIDE ORIENTATION)

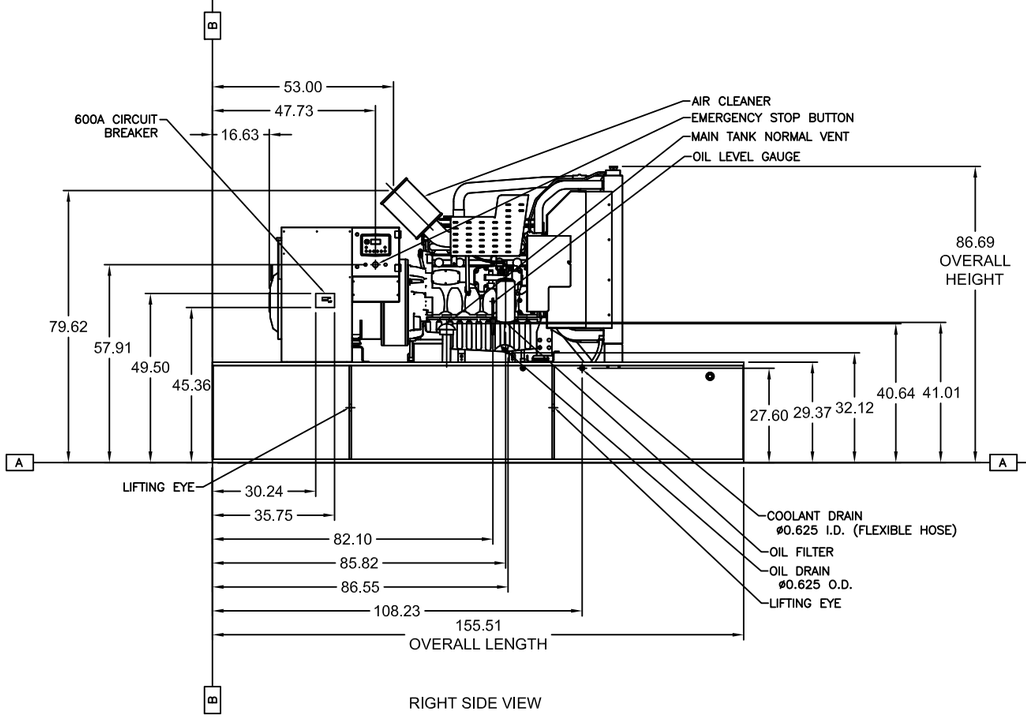

RIGHT SIDE VIEW

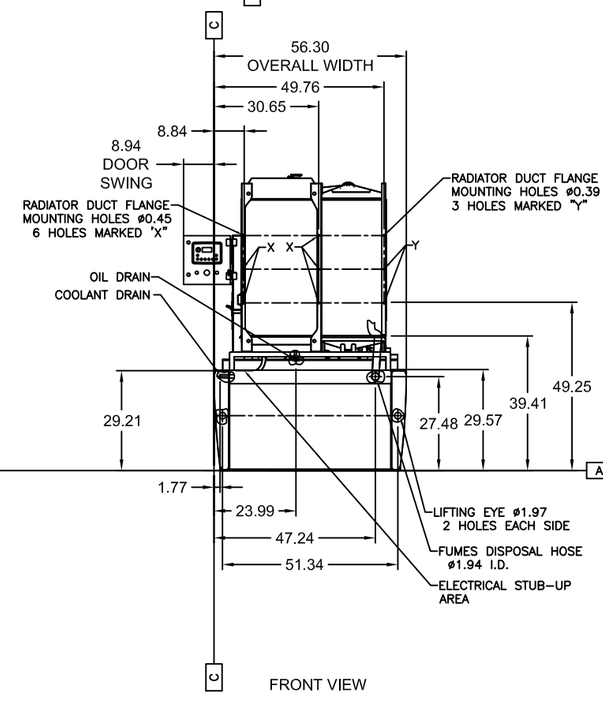

FRONT VIEW

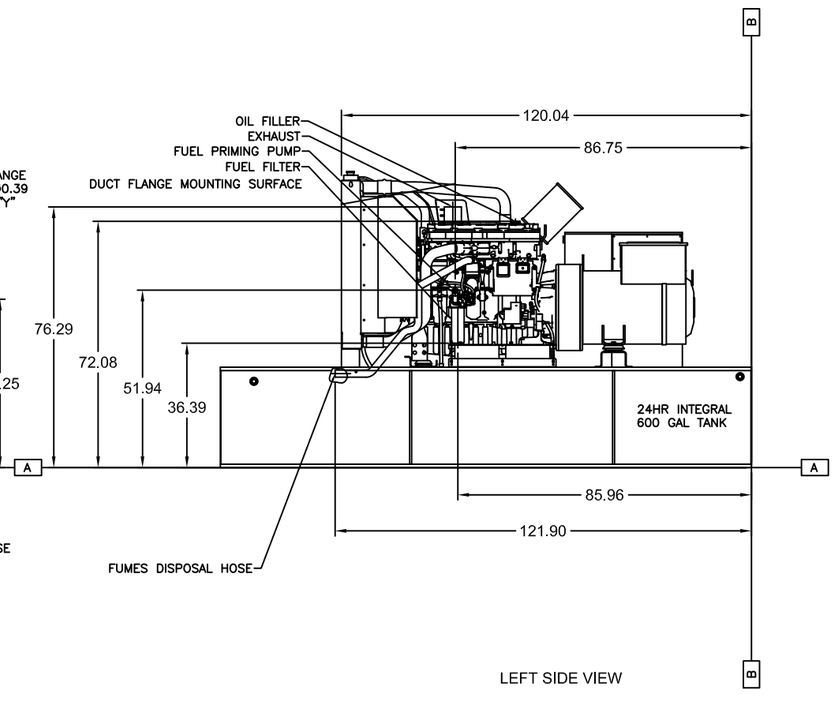

LEFT SIDE VIEW

REV	DATE	BY	NOTES

REV	DATE	BY	NOTES

GENERAL INFORMATION		
FUEL CONSUMPTION	RADIATED HEAT REJECTION	RADIATOR AMBIENT TEMPERATURE
22.7 GAL/HR	6,838 BTU/MIN	125 °F
COMBUSTION AIR	RADIATOR AIR FLOW	AC VOLTAGE
869 CFM	17,551 CFM	277/480 VAC

GENERAL INFORMATION		
KW	LENGTH"	WIDTH"
300	155.51	56.69
PHASE		HEIGHT"
3 ø		97.94

PROJECT NAME AND CITY/STATE
MINNETONKA BEACH WTP
WAYZATE, MN

DESCRIPTION
C9 GC CATERPILLAR 300KW
STANDBY DIESEL GENERATOR SET

SHEET 1 OF 3
DATE 08/14/24
SCALE NONE

ZIEGLER Power Systems CAT
8050 COUNTY ROAD 101 EAST
SHAKOPEE, MN 55379
(952) 445-4292
1500 ZIEGLER DRIVE NW
ALTOONA, IA 50009
(515) 957-3800

DRAWING # 16783

THIS INFORMATION IS PROPERTY OF ZIEGLER POWER SYSTEMS (ZPS), AND SHALL NOT BE REPRODUCED OR COPIED. IT IS PROVIDED SOLELY FOR USE W/ZPS, IN CONJUNCTION WITH THIS PROJECT, AND MAY NOT BE USED FOR ANY OTHER PURPOSE WITHOUT WRITTEN CONSENT.

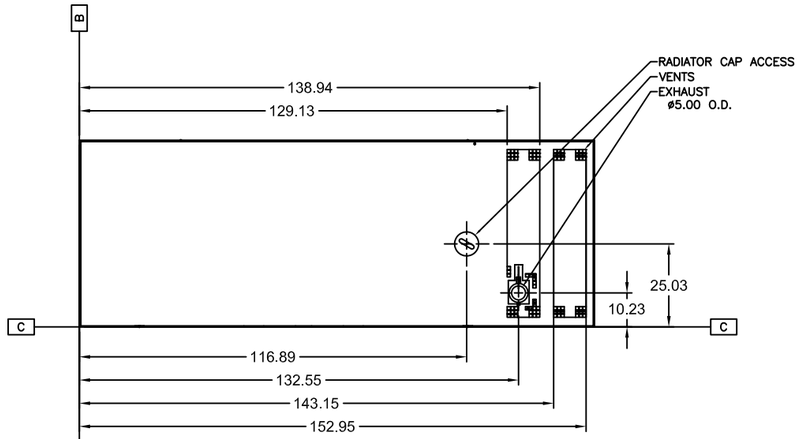

TOP VIEW

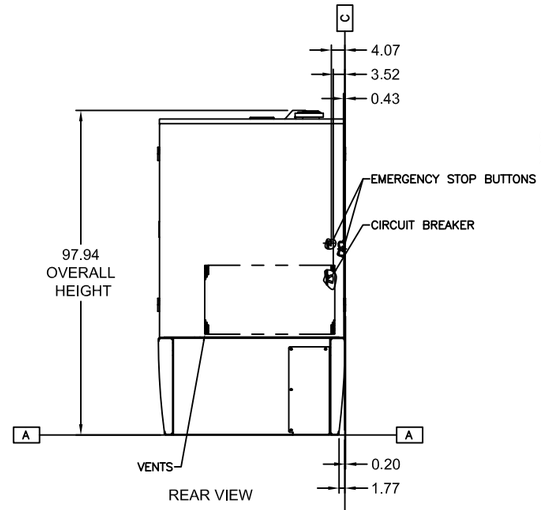

REAR VIEW

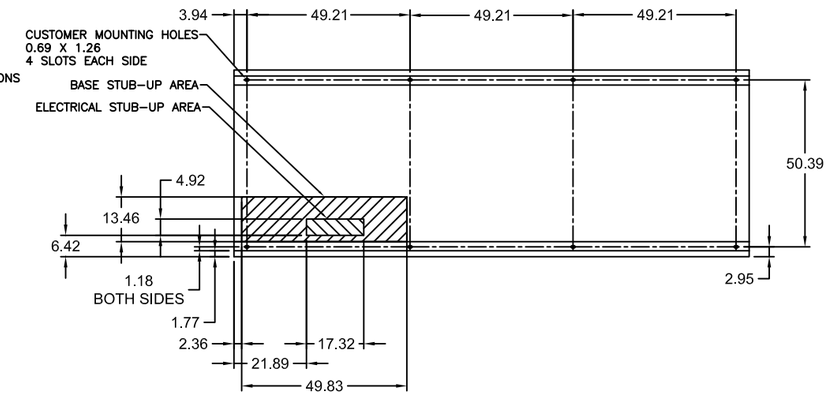

FOOTPRINT
(DIMENSIONED OUTLINE VIEW FROM ABOVE)
(RIGHT SIDE ORIENTATION)

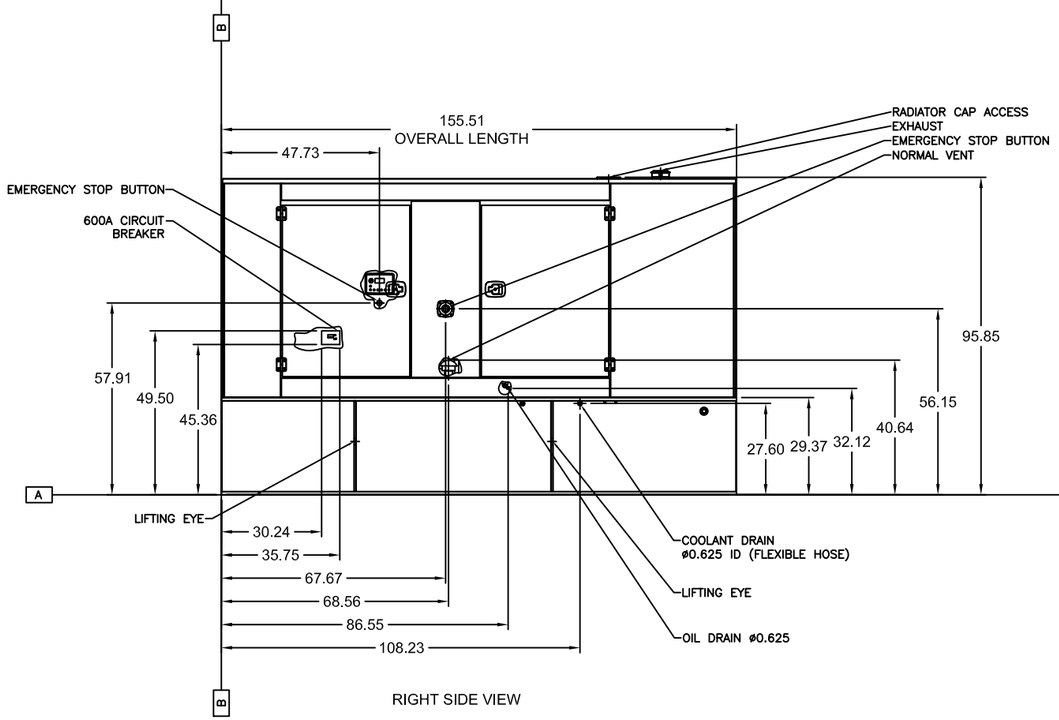

RIGHT SIDE VIEW

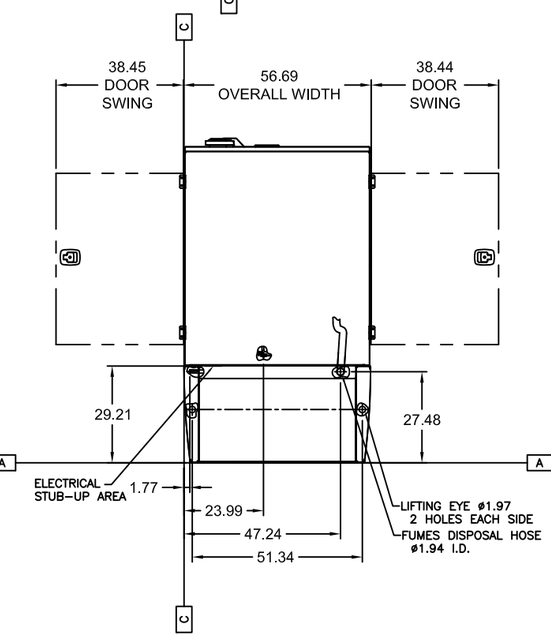

FRONT VIEW

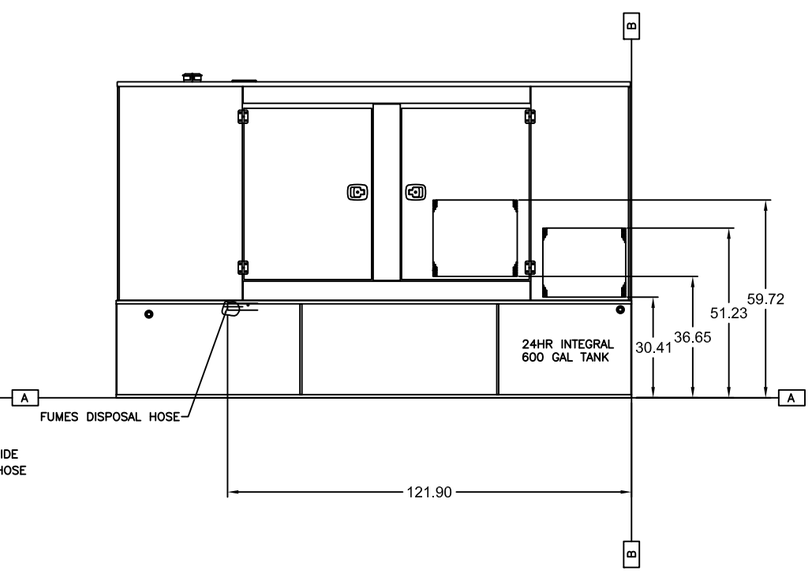

LEFT SIDE VIEW

REV	DATE	BY	NOTES

REV	DATE	BY	NOTES

GENERAL INFORMATION	
ESTIMATED INSTALLATION WEIGHT	
8,500	LBS.
12,900	LBS. (W/FUEL)

GENERAL INFORMATION		
LENGTH"	WIDTH"	HEIGHT"
155.51	56.69	97.94

PROJECT NAME AND CITY/STATE
MINNETONKA BEACH WTP
WAYZATE, MN

DESCRIPTION
C9 GC CATERPILLAR SOUND ATTENUATED
ENCLOSURE AND INTEGRAL FUEL TANK DETAIL

SHEET 2 OF 3

DATE 08/14/24

SCALE NONE

ZIEGLER Power Systems CAT

8050 COUNTY ROAD 101 EAST
SHAKOPEE, MN 55379
(952) 445-4292

1500 ZIEGLER DRIVE NW
ALTOONA, IA 50009
(515) 957-3800

DRAWING # 16783

THIS INFORMATION IS PROPERTY OF ZIEGLER POWER SYSTEMS (ZPS), AND SHALL NOT BE REPRODUCED OR COPIED. IT IS PROVIDED SOLELY FOR USE W/ZPS, IN CONJUNCTION WITH THIS PROJECT, AND MAY NOT BE USED FOR ANY OTHER PURPOSE WITHOUT WRITTEN CONSENT.

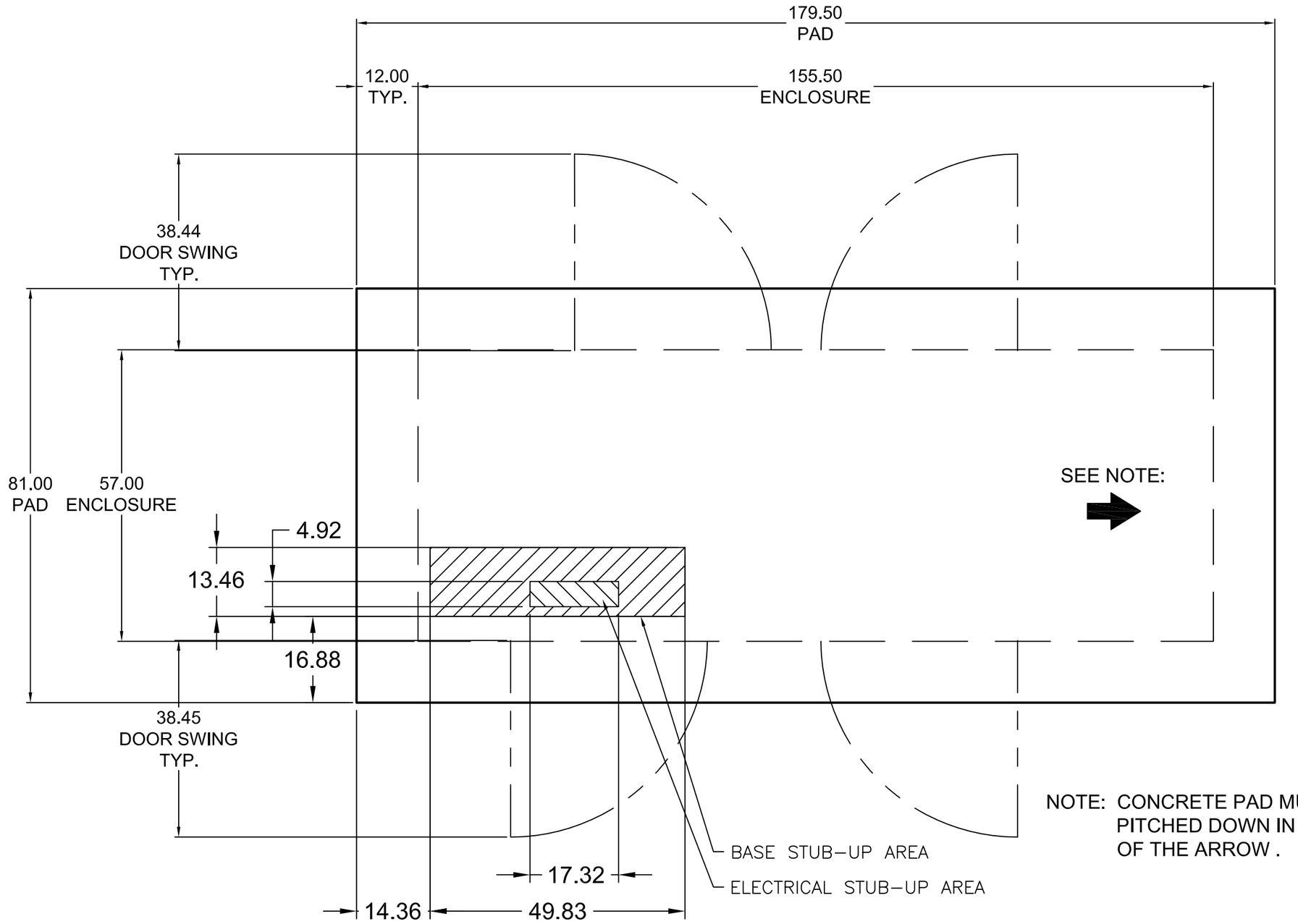

NOTE: CONCRETE PAD MUST BE FLAT OR PITCHED DOWN IN THE DIRECTION OF THE ARROW .

REV	DATE	BY	NOTES

REV	DATE	BY	NOTES

GENERAL INFORMATION	
ESTIMATED INSTALLATION WEIGHT	
8,500	LBS.
12,900	LBS. (W/FUEL)

GENERAL INFORMATION		
LENGTH"	WIDTH"	HEIGHT"
155.51	56.69	97.94

PROJECT NAME AND CITY/STATE
MINNETONKA BEACH WTP
WAYZATE, MN

DESCRIPTION
C9 GC CATERPILLAR RECOMMENDED
PAD LAYOUT

SHEET 3 OF 3

DATE 08/14/24

SCALE NONE

ZIEGLER Power Systems CAT

8050 COUNTY ROAD 101 EAST
SHAKOPEE, MN 55379
(952) 445-4292

1500 ZIEGLER DRIVE NW
ALTOONA, IA 50009
(515) 957-3500

DRAWING # 16783

THIS INFORMATION IS PROPERTY OF ZIEGLER POWER SYSTEMS (ZPS), AND SHALL NOT BE REPRODUCED OR COPIED. IT IS PROVIDED SOLELY FOR USE W/ZPS, IN CONJUNCTION WITH THIS PROJECT, AND MAY NOT BE USED FOR ANY OTHER PURPOSE WITHOUT WRITTEN CONSENT.

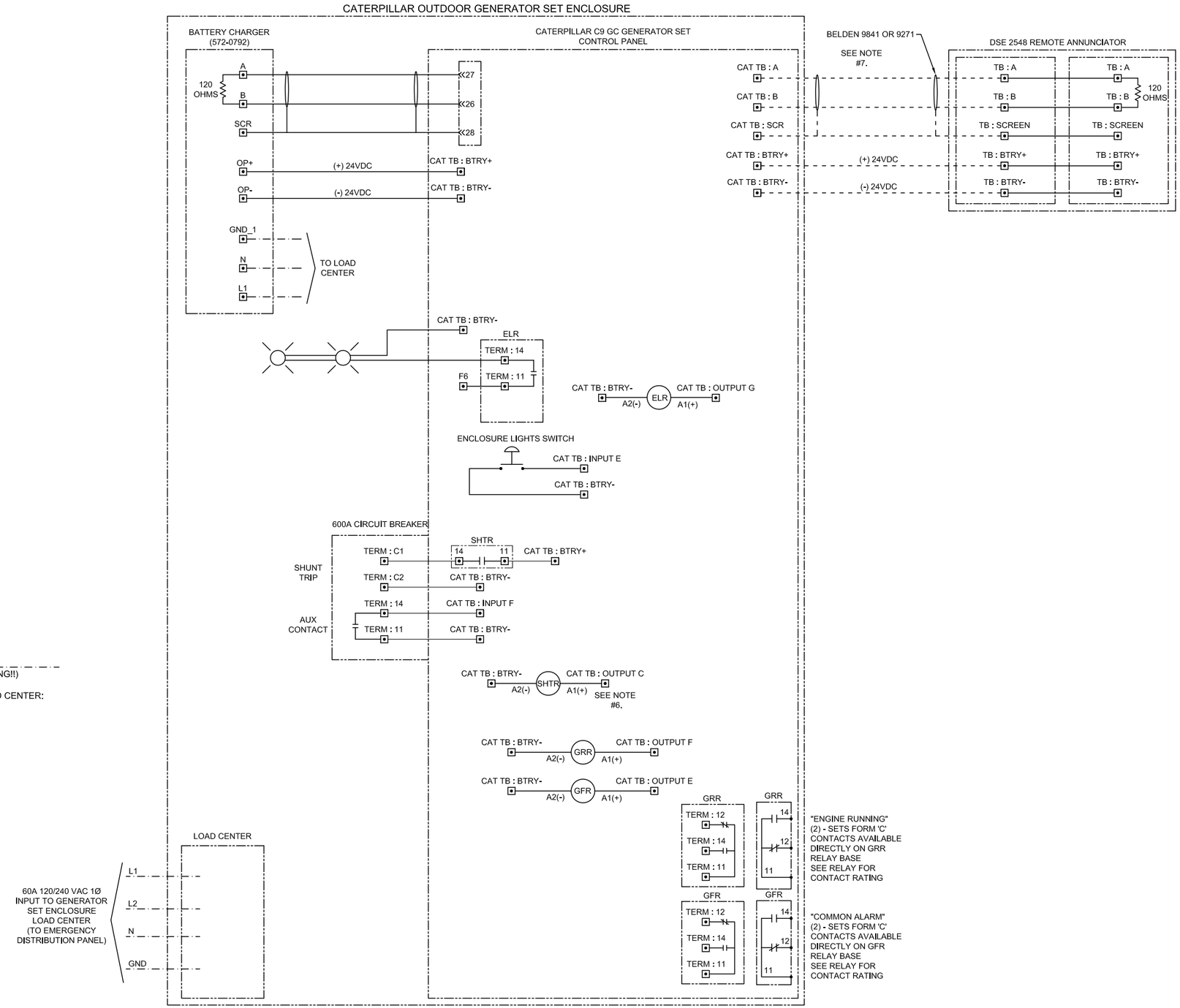

WIRE RUN TOTALS AS FOLLOWS:
(SPARES INCLUDED)

DC CONNECTIONS: - - - - - - - - -

GENERATOR SET TO DSE 2548 REMOTE ANNUNCIATOR:
(1) - BELDEN 9841 OR BELDEN 9271 CABLE
(4) - #14 AWG

AC CONNECTIONS (WIRE SIZE & TYPE TBD BY CONTRACTOR):
(AC WIRING TO BE RUN IN SEPARATE CONDUIT FROM DC WIRING!!)

60A 120/240VAC 1Ø SUPPLY POWER TO GENERATOR SET LOAD CENTER:
4 WIRES TOTAL (INCLUDES GROUND)

NOTES ON PAGE #2.

REV	DATE	BY	NOTES

REV	DATE	BY	NOTES

PROJECT NAME AND CITY/STATE
MINNETONKA BEACH WTP
WAYZATE, MN

DESCRIPTION
C9 GC GENERATOR SET SYSTEM
INTERCONNECT DIAGRAM

SHEET 1 OF 2
DATE 08/14/24
SCALE NONE

ZIEGLER Power Systems
8050 COUNTY ROAD 101 EAST
SHAKOPEE, MN 55379
(952) 445-4292
1500 ZIEGLER DRIVE NW
ALTOONA, IA 50009
(515) 957-3800

DRAWING #
16783-A1

THIS INFORMATION IS PROPERTY OF ZIEGLER POWER SYSTEMS (ZPS), AND SHALL NOT BE REPRODUCED OR COPIED. IT IS PROVIDED SOLELY FOR USE W/ZPS, IN CONJUNCTION WITH THIS PROJECT, AND MAY NOT BE USED FOR ANY OTHER PURPOSE WITHOUT WRITTEN CONSENT.

NOTES:

1. ALL WIRES TO BE STRANDED COPPER ONLY.
2. ALL WIRES TO BE #14 AWG UNLESS OTHERWISE SPECIFIED.
3. USE SIZES AS NOTED FOR ALL SHIELDED CABLES.
4. DARK DASHED LINES TO BE WIRED BY THE CONTRACTOR.
   LIGHT SOLID LINES TO BE WIRED BY ZIEGLER.
   DARK SOLID LINES ARE PRE-WIRED BY THE FACTORY.

5. CONFIRM THE FOLLOWING PROGRAMMING SETTINGS USING DSE SOFTWARE.
   CONSULT PROJECT MANAGER BEFORE OVERWRITING FACTORY SETTINGS
   UNDER 'ANALOGUE INPUT CONFIGURATION'
   VERIFY FACTORY SETTINGS AS FOLLOWS:
   SET 'ANALOGUE INPUT A' TO 'FUEL SENSOR'
   SET 'ANALOGUE INPUT B' TO 'NOT USED'
   SET 'ANALOGUE INPUT C' TO 'NOT USED'
   SET 'ANALOGUE INPUT D' TO 'NOT USED'

   UNDER 'DIGITAL INPUTS':
   PROGRAM **DIGITAL INPUT A**: FUNCTION TO 'REMOTE START ON LOAD', POLARITY TO 'CLOSE TO ACTIVATE',
   LCD DISPLAY TO 'REMOTE START ON LOAD', ACTIVATION DELAY TO '0 SEC'.
   PROGRAM **DIGITAL INPUT B**: FUNCTION TO 'USER CONFIGURED', POLARITY TO 'CLOSE TO ACTIVATE',
   ACTION TO 'SHUTDOWN', ARMING TO 'ALWAYS', LCD DISPLAY TO 'LOW COOLANT LEVEL', ACTIVATION DELAY TO '5 SEC'.
   PROGRAM **DIGITAL INPUT C**: FUNCTION TO 'FUEL TANK BUND LEVEL HIGH', POLARITY TO 'OPEN TO ACTIVATE',
   LCD DISPLAY TO 'HIGH FUEL TANK LEVEL', ACTIVATION DELAY TO '0 SEC'.
   PROGRAM **DIGITAL INPUT D**: FUNCTION TO 'USER CONFIGURED', POLARITY TO 'CLOSE TO ACTIVATE',
   ACTION TO 'INDICATION', ARMING TO 'ALWAYS', LCD DISPLAY TO 'ATS ON EMERGENCY', ACTIVATION DELAY TO '0 SEC'.
   PROGRAM **DIGITAL INPUT E**: FUNCTION TO 'USER CONFIGURED', POLARITY TO 'CLOSE TO ACTIVATE',
   ACTION TO 'INDICATION', ARMING TO 'ALWAYS', LCD DISPLAY TO 'ENCLOSURE LIGHT SWITCH', ACTIVATION DELAY TO '0 SEC'.
   PROGRAM **DIGITAL INPUT F**:FUNCTION TO 'USER CONFIGURED', POLARITY TO 'CLOSE TO ACTIVATE',
   ACTION TO 'WARNING', ARMING TO 'ALWAYS', LCD DISPLAY TO 'CIRCUIT BREAKER OPEN', ACTIVATION DELAY TO '0 SEC'.
   PROGRAM **DIGITAL INPUT G**: FUNCTION TO 'USER CONFIGURED', POLARITY TO 'CLOSE TO ACTIVATE',
   ACTION TO 'WARNING', ARMING TO 'ALWAYS', LCD DISPLAY TO 'LOW FUEL LEVEL', ACTIVATION DELAY TO '30 SEC'.
   PROGRAM **DIGITAL INPUT H**: DISABLED.

   UNDER 'DIGITAL OUTPUTS':
   PROGRAM **DIGITAL OUTPUT A**: DISABLED.
   PROGRAM **DIGITAL OUTPUT B**: SOURCE TO 'START RELAY', POLARITY TO 'ENERGISE'.
   PROGRAM **DIGITAL OUTPUT C**: SOURCE TO 'COMMON SHUTDOWN', POLARITY TO 'ENERGISE'.
   PROGRAM **DIGITAL OUTPUT D**: SOURCE TO 'FUEL RELAY', POLARITY TO 'ENERGISE'.
   PROGRAM **DIGITAL OUTPUT E**: SOURCE TO 'COMMON ALARM', POLARITY TO 'ENERGISE'.
   PROGRAM **DIGITAL OUTPUT F**: SOURCE TO 'GEN AVAILABLE', POLARITY TO 'ENERGISE'.
   PROGRAM **DIGITAL OUTPUT G**: SOURCE TO 'ENCLOSURE LIGHTS', POLARITY TO 'ENERGISE'.
   PROGRAM **DIGITAL OUTPUT H**: SOURCE TO 'AUDIBLE ALARM', POLARITY TO 'ENERGISE'.

6. INSTALL 24VDC 3-POLE RELAYS ON DIN RAIL, AND WIRE AS SHOWN. CAT P/N'S AS FOLLOWS:
   (1) - 223-6470 RELAY (1) - 252-1732 BASE
   (1) - 211-0640 SPRING (1) - 252-1731 DIODE

7. BELDEN 9841 CABLE MAXIMUM WIRE RUN: 1000M OR BELDEN 9271 CABLE MAXIMUM WIRE RUN: 500M

REV	DATE	BY	NOTES

REV	DATE	BY	NOTES

PROJECT NAME AND CITY/STATE
MINNETONKA BEACH WTP
WAYZATE, MN

DESCRIPTION
GENERATOR SET SYSTEM INTERCONNECT
DIAGRAM NOTES PAGE

SHEET 2 OF 2
DATE 08/14/24
SCALE NONE

ZIEGLER Power Systems CAT
8050 COUNTY ROAD 101 EAST
SHAKOPEE, MN 55379
(952) 445-4292
1500 ZIEGLER DRIVE NW
ALTOONA, IA 50009
(515) 957-3800

DRAWING # 16783-A1

THIS INFORMATION IS PROPERTY OF ZIEGLER POWER SYSTEMS (ZPS), AND SHALL NOT BE REPRODUCED OR COPIED. IT IS PROVIDED SOLELY FOR USE W/ZPS, IN CONJUNCTION WITH THIS PROJECT, AND MAY NOT BE USED FOR ANY OTHER PURPOSE WITHOUT WRITTEN CONSENT.

Effective with sales to the first user on or after July 1, 2021

CATERPILLAR LIMITED WARRANTY

Industrial, Petroleum, Locomotive, and Agriculture Engine Products and Electric Power Generation Products

Worldwide

Caterpillar Inc. or any of its subsidiaries ("Caterpillar") warrants new and remanufactured engines and new and rebuild electric power generation products sold by it (including any products of other manufacturers packaged and sold by Caterpillar), to be free from defects in material and workmanship.

This warranty does not apply to engines sold for use in on-highway vehicle or marine applications; engines in machines manufactured by or for Caterpillar; C175, 3500 and 3600 series engines used in locomotive applications; 3000 Family engines, C0.5 through C4.4 and ACERT™ (C6.6, C7, C7.1, C9, C9.3, C11, C13, C15, C18, C27, and C32) engines used in industrial, mobile agriculture and locomotive applications; or Cat® batteries; or Electric Power Generation Products manufactured or assembled in India. These products are covered by other Caterpillar warranties.

This warranty is subject to the following:

Warranty Period

- For industrial engines, engines in a petroleum applications or Petroleum Power Systems (excluding petroleum fire pump application), or engines in a Locomotive application, or Uninterruptible Power Supply (UPS) systems, the warranty period is 12 months after date of delivery to the first user.
- For engines used in petroleum fire pump and mobile agriculture applications the warranty period is 24 months after date of delivery to the first user.
- For controls only (EPIC), configurable and custom switchgear products, and automatic transfer switch products, the warranty period is 24 months after date of delivery to the first user.
- For new CG132, CG170 and CG260 series power generation products the warranty period is 24 months after date of delivery to first user, but not to exceed 36 months from shipment from the Caterpillar place of manufacture.
- For electric power generation products other than CG132, CG170 and CG260 series in prime or continuous applications the warranty period is 12 months. For standby applications the warranty period is 24 months/1000 hours. For emergency standby applications the warranty period is 24 months/400 hours. All terms begin after date of delivery to the first user.
- For Caterpillar rebuild electric power generation products the warranty period is 12 months, but not to exceed 24 months from shipment of rebuilt electric power generation product from Caterpillar.
- For all other applications the warranty period is 12 months after date of delivery to the first user.

Caterpillar Responsibilities

If a defect in material or workmanship is found during the warranty period, Caterpillar will, during normal working hours and at a place of business of a Cat dealer or other source approved by Caterpillar:

- Provide (at Caterpillar's choice) new, Remanufactured, or Caterpillar approved repaired parts or assembled components needed to correct the defect.

Note: New, remanufactured, or Caterpillar approved repaired parts or assembled components provided under the terms of this warranty are warranted for the remainder of the warranty period applicable to the product in which installed as if such parts were original components of that product. Items replaced under this warranty become the property of Caterpillar.

- Replace lubricating oil, filters, coolant, and other service items made unusable by the defect.
- Provide reasonable and customary labor needed to correct the defect, including labor to disconnect the product from and reconnect the product to its attached equipment, mounting, and support systems, if required.

For new 3114, 3116, and 3126 engines and, new and Caterpillar rebuild electric power generation products (which includes the following: any new products of other manufacturers packaged and sold by Caterpillar)

- Provide travel labor, up to four hours round trip, if in the opinion of Caterpillar, the product cannot reasonably be transported to a place of business of a Cat dealer or other source approved by Caterpillar (travel labor in excess of four hours round trip, and any meals, mileage, lodging, etc. is the user's responsibility).

For all other products:

- Provide reasonable travel expenses for authorized mechanics, including meals, mileage, and lodging, when Caterpillar chooses to make the repair on-site.

User Responsibilities

The user is responsible for:

- Providing proof of the delivery date to the first user.
- Labor costs, except as stated under "Caterpillar Responsibilities," including costs beyond those required to disconnect the product from and reconnect the product to its attached equipment, mounting, and support systems.
- Travel or transporting costs, except as stated under "Caterpillar Responsibilities."
- Premium or overtime labor costs.
- Parts shipping charges in excess of those that are usual and customary.
- Local taxes, if applicable.
- Costs to investigate complaints, unless the problem is caused by a defect in Caterpillar material or workmanship.
- Giving timely notice of a warrantable failure and promptly making the product available for repair.
- Performance of the required maintenance (including use of proper fuel, oil, lubricants, and coolant) and items replaced due to normal wear and tear.
- Allowing Caterpillar access to all electronically stored data.

Limitations

Caterpillar is not responsible for:

- Failures resulting from any use or installation that Caterpillar judges improper.
- Failures resulting from attachments, accessory items, and parts not sold or approved by Caterpillar.
- Failures resulting from abuse, neglect, and/or improper repair.
- Failures resulting from user's delay in making the product available after being notified of a potential product problem.
- Failures resulting from unauthorized repairs or adjustments, and unauthorized fuel setting changes.
- Damage to parts, fixtures, housings, attachments, and accessory items that are not part of the engine, Cat Selective Catalytic Reduction System or electric power generation product (including any products of other manufacturers packaged and sold by Caterpillar).
- Repair of components sold by Caterpillar that is warranted directly to the user by their respective manufacturer. Depending on type of application, certain exclusions may apply. Consult your Cat dealer for more information.

(Continued on reverse side…)

This warranty covers every major component of the products. Claims under this warranty should be submitted to a place of business of a Cat dealer or other source approved by Caterpillar. For further information concerning either the location to submit claims or Caterpillar as the issuer of this warranty, write Caterpillar Inc., 100 N. E. Adams St., Peoria, IL USA 61629.

Caterpillar's obligations under this Limited Warranty are subject to, and shall not apply in contravention of, the laws, rules, regulations, directives, ordinances, orders, or statutes of the United States, or of any other applicable jurisdiction, without recourse or liability with respect to Caterpillar.

A) For products operating outside of Australia, Fiji, Nauru, New Caledonia, New Zealand, Papua New Guinea, the Solomon Islands and Tahiti, the following is applicable:

NEITHER THE FOREGOING EXPRESS WARRANTY NOR ANY OTHER WARRANTY BY CATERPILLAR, EXPRESS OR IMPLIED, IS APPLICABLE TO ANY ITEM CATERPILLAR SELLS THAT IS WARRANTED DIRECTLY TO THE USER BY ITS MANUFACTURER.

THIS WARRANTY IS EXPRESSLY IN LIEU OF ANY OTHER WARRANTIES, EXPRESS OR IMPLIED, INCLUDING ANY WARRANTY OF MERCHANTABILITY OR FITNESS FOR A PARTICULAR PURPOSE, EXCEPT CATERPILLAR EMISSION-RELATED COMPONENTS WARRANTIES FOR NEW ENGINES, WHERE APPLICABLE. REMEDIES UNDER THIS WARRANTY ARE LIMITED TO THE PROVISION OF MATERIAL AND SERVICES, AS SPECIFIED HEREIN.

CATERPILLAR IS NOT RESPONSIBLE FOR INCIDENTAL OR CONSEQUENTIAL DAMAGES.

CATERPILLAR EXCLUDES ALL LIABILITY FOR OR ARISING FROM ANY NEGLIGENCE ON ITS PART OR ON THE PART OF ANY OF ITS EMPLOYEES, AGENTS OR REPRESENTATIVES IN RESPECT OF THE MANUFACTURE OR SUPPLY OF GOODS OR THE PROVISION OF SERVICES RELATING TO THE GOODS.

IF OTHERWISE APPLICABLE, THE VIENNA CONVENTION ON CONTRACTS FOR THE INTERNATIONAL SALE OF GOODS IS EXCLUDED IN ITS ENTIRETY.

For personal or family use engines or electric power generation products, operating in the USA, its territories and possessions, some states do not allow limitations on how long an implied warranty may last nor allow the exclusion or limitation of incidental or consequential damages. Therefore, the previously expressed exclusion may not apply to you. This warranty gives you specific legal rights and you may also have other rights, which vary by jurisdiction. To find the location of the nearest Cat dealer or other authorized repair facility, call (309) 675-1000. If you have questions concerning this warranty or its applications, call or write:

In USA and Canada: Caterpillar Inc, 100 N.E. Adams St., Peoria, IL USA 61629, Attention: Customer Service Manager, Telephone 1 (309) 675-1000, outside the USA and Canada: Contact your Cat dealer.

B) For products operating in Australia, Fiji, Nauru, New Caledonia, New Zealand, Papua New Guinea, the Solomon Islands and Tahiti, the following is applicable:

THIS WARRANTY IS IN ADDITION TO WARRANTIES AND CONDITIONS IMPLIED BY STATUTE AND OTHER STATUTORY RIGHTS AND OBLIGATIONS THAT BY ANY APPLICABLE LAW CANNOT BE EXCLUDED, RESTRICTED OR MODIFIED ("MANDATORY RIGHTS"). ALL OTHER WARRANTIES OR CONDITIONS, EXPRESS OR IMPLIED (BY STATUTE OR OTHERWISE), ARE EXCLUDED. WITHOUT LIMITING THE FOREGOING PROVISIONS OF THIS PARAGRAPH, WHERE A PRODUCT IS SUPPLIED FOR BUSINESS PURPOSES, THE CONSUMER GUARANTEES UNDER THE CONSUMER GUARANTEES ACT 1993 (NZ) WILL NOT APPLY.

NEITHER THIS WARRANTY NOR ANY OTHER CONDITION OR WARRANTY BY CATERPILLAR, EXPRESS OR IMPLIED (SUBJECT ONLY TO THE MANDATORY RIGHTS), IS APPLICABLE TO ANY ITEM CATERPILLAR SELLS THAT IS WARRANTED DIRECTLY TO THE USER BY ITS MANUFACTURER.

IF THE MANDATORY RIGHTS MAKE CATERPILLAR LIABLE IN CONNECTION WITH SERVICES OR GOODS, THEN TO THE EXTENT PERMITTED UNDER THE MANDATORY RIGHTS, THAT LIABILITY SHALL BE LIMITED AT CATERPILLAR'S OPTION TO (a) IN THE CASE OF SERVICES, THE SUPPLY OF THE SERVICES AGAIN OR THE PAYMENT OF THE COST OF HAVING THE SERVICES SUPPLIED AGAIN AND (b) IN THE CASE OF GOODS, THE REPAIR OR REPLACEMENT OF THE GOODS, THE SUPPLY OF EQUIVALENT GOODS, THE PAYMENT OF THE COST OF SUCH REPAIR OR REPLACEMENT OR THE ACQUISITION OF EQUIVALENT GOODS.

CATERPILLAR EXCLUDES ALL LIABILITY FOR OR ARISING FROM ANY NEGLIGENCE ON ITS PART OR ON THE PART OF ANY OF ITS EMPLOYEES, AGENTS OR REPRESENTATIVES IN RESPECT OF THE MANUFACTURE OR SUPPLY OF GOODS OR THE PROVISION OF SERVICES RELATING TO THE GOODS.

CATERPILLAR IS NOT LIABLE FOR INCIDENTAL OR CONSEQUENTIAL DAMAGES UNLESS IMPOSED UNDER MANDATORY RIGHTS.

IF OTHERWISE APPLICABLE, THE VIENNA CONVENTION ON CONTRACTS FOR THE INTERNATIONAL SALE OF GOODS IS EXCLUDED IN ITS ENTIRETY.

C) For products supplied in Australia:

IF THE PRODUCTS TO WHICH THIS WARRANTY APPLIES ARE:

I. PRODUCTS OF A KIND ORDINARILY ACQUIRED FOR PERSONAL, DOMESTIC OR HOUSEHOLD USE OR CONSUMPTION; OR

II. PRODUCTS THAT COST AUD 100,000 OR LESS,

WHERE THOSE PRODUCTS WERE NOT ACQUIRED FOR THE PURPOSE OF RE-SUPPLY OR FOR THE PURPOSE OF USING THEM UP OR TRANSFORMING THEM IN THE COURSE OF PRODUCTION OR MANUFACTURE OR IN THE COURSE OF REPAIRING OTHER GOODS OR FIXTURES, THEN THIS SECTION C APPLIES.

THE FOLLOWING MANDATORY TEXT IS INCLUDED PURSUANT TO THE AUSTRALIAN CONSUMER LAW AND INCLUDES REFERENCES TO RIGHTS THE USER MAY HAVE AGAINST THE DIRECT SUPPLIER OF THE PRODUCTS: OUR GOODS COME WITH GUARANTEES THAT CANNOT BE EXCLUDED UNDER THE AUSTRALIAN CONSUMER LAW. YOU ARE ENTITLED TO A REPLACEMENT OR REFUND FOR A MAJOR FAILURE AND COMPENSATION FOR ANY OTHER REASONABLY FORESEEABLE LOSS OR DAMAGE. YOU ARE ALSO ENTITLED TO HAVE THE GOODS REPAIRED OR REPLACED IF THE GOODS FAIL TO BE OF ACCEPTABLE QUALITY AND THE FAILURE DOES NOT AMOUNT TO A MAJOR FAILURE. THE INCLUSION OF THIS TEXT DOES NOT CONSTITUTE ANY REPRESENTATION OR ACCEPTANCE BY CATERPILLAR OF LIABILITY TO THE USER OR ANY OTHER PERSON IN ADDITION TO THAT WHICH CATERPILLAR MAY HAVE UNDER THE AUSTRALIAN CONSUMER LAW.

TO THE EXTENT THE PRODUCTS FALL WITHIN THIS SECTION C BUT ARE NOT OF A KIND ORDINARILY ACQUIRED FOR PERSONAL, DOMESTIC OR HOUSEHOLD USE OR CONSUMPTION, CATERPILLAR LIMITS ITS LIABILITY TO THE EXTENT IT IS PERMITTED TO DO SO UNDER THE AUSTRALIAN CONSUMER LAW TO, AT ITS OPTION, THE REPAIR OR REPLACEMENT OF THE PRODUCTS, THE SUPPLY OF EQUIVALENT PRODUCTS, OR THE PAYMENT OF THE COST OF SUCH REPAIR OR REPLACEMENT OR THE ACQUISITION OF EQUIVALENT PRODUCTS.

THE WARRANTY SET OUT IN THIS DOCUMENT IS GIVEN BY CATERPILLAR INC. OR ANY OF ITS SUBSIDIARIES, 100 N. E. ADAMS ST, PEORIA, IL USA 61629, TELEPHONE 1 309 675 1000, THE USER IS RESPONSIBLE FOR ALL COSTS ASSOCIATED WITH MAKING A CLAIM UNDER THE WARRANTY SET OUT IN THIS DOCUMENT, EXCEPT AS EXPRESSLY STATED OTHERWISE IN THIS DOCUMENT, AND THE USER IS REFERRED TO THE BALANCE OF THE DOCUMENT TERMS CONCERNING CLAIM PROCEDURES, CATERPILLAR RESPONSIBILITIES AND USER RESPONSIBILITIES.

TO THE EXTENT PERMISSIBLE BY LAW, THE TERMS SET OUT IN THE REMAINDER OF THIS WARRANTY DOCUMENT (INCLUDING SECTION B) CONTINUE TO APPLY TO PRODUCTS TO WHICH THIS SECTION C APPLIES.

© 2021 Caterpillar. All Rights Reserved. CAT, CATERPILLAR, LET'S DO THE WORK, their respective logos, "Caterpillar Corporate Yellow", the "Power Edge" and Cat "Modern Hex" trade dress as well as corporate and product identity used herein, are trademarks of Caterpillar and may not be used without permission.