M0112246-05 (en-us)
January 2023

Operation and Maintenance Manual

C9, C13 , C15, and C18 Generator Sets

RG3 1-UP (D250GC)
S34 1-UP (D350GC)
RG4 1-UP (D350GC)
S35 1-UP (D450GC)
RG5 1-UP (D450GC)
S36 1-UP (D600GC)
R2N 1-UP (D600GC)
RE3 1-UP (D300GC)
S44 1-UP (D400GC)
RE4 1-UP (D400GC)
S65 1-UP (D500GC)
RK5 1-UP (D500GC)
S37 1-UP (D550GC)
R2K 1-UP (D550GC)

Language: Original Instructions

Scan to find and purchase genuine Cat® parts and related service information.

Important Safety Information

Most accidents that involve product operation, maintenance and repair are caused by failure to observe basic safety rules or precautions. An accident can often be avoided by recognizing potentially hazardous situations before an accident occurs. A person must be alert to potential hazards, including human factors that can affect safety. This person should also have the necessary training, skills and tools to perform these functions properly.

Improper operation, lubrication, maintenance or repair of this product can be dangerous and could result in injury or death.

Do not operate or perform any lubrication, maintenance or repair on this product, until you verify that you are authorized to perform this work, and have read and understood the operation, lubrication, maintenance and repair information.

Safety precautions and warnings are provided in this manual and on the product. If these hazard warnings are not heeded, bodily injury or death could occur to you or to other persons.

The hazards are identified by the “Safety Alert Symbol” and followed by a “Signal Word” such as “DANGER”, “WARNING” or “CAUTION”. The Safety Alert “WARNING” label is shown below.

⚠ WARNING

The meaning of this safety alert symbol is as follows:

Attention! Become Alert! Your Safety is Involved.

The message that appears under the warning explains the hazard and can be either written or pictorially presented.

A non-exhaustive list of operations that may cause product damage are identified by “NOTICE” labels on the product and in this publication.

Caterpillar cannot anticipate every possible circumstance that might involve a potential hazard. The warnings in this publication and on the product are, therefore, not all inclusive. You must not use this product in any manner different from that considered by this manual without first satisfying yourself that you have considered all safety rules and precautions applicable to the operation of the product in the location of use, including site-specific rules and precautions applicable to the worksite. If a tool, procedure, work method or operating technique that is not specifically recommended by Caterpillar is used, you must satisfy yourself that it is safe for you and for others. You should also ensure that you are authorized to perform this work, and that the product will not be damaged or become unsafe by the operation, lubrication, maintenance or repair procedures that you intend to use.

The information, specifications, and illustrations in this publication are on the basis of information that was available at the time that the publication was written. The specifications, torques, pressures, measurements, adjustments, illustrations, and other items can change at any time. These changes can affect the service that is given to the product. Obtain the complete and most current information before you start any job. Cat dealers have the most current information available.

NOTICE

When replacement parts are required for this product Caterpillar recommends using original Caterpillar® replacement parts.

Other parts may not meet certain original equipment specifications.

When replacement parts are installed, the machine owner/user should ensure that the machine remains in compliance with all applicable requirements.

In the United States, the maintenance, replacement, or repair of the emission control devices and systems may be performed by any repair establishment or individual of the owner's choosing.

Table of Contents

Foreword 4

Safety Section

Safety Messages 6

General Hazard Information 16

Burn Prevention 20

Fire Prevention and Explosion Prevention 21

Crushing Prevention and Cutting Prevention .. 22

Mounting and Dismounting 22

Sound Information 23

Before Starting Engine 23

Engine Starting 24

Engine Stopping 24

Electrical System 24

Engine Electronics 25

Generator Isolating for Maintenance 25

Product Information Section

General Information 27

Product Identification Information 32

Operation Section

Lifting and Storage 40

Installation 44

Features and Controls 46

Engine Diagnostics 56

Engine Starting 63

Engine Operation 68

Generator Operation 70

Cold Weather Operation 78

Engine Stopping 80

Maintenance Section

Refill Capacities 83

Maintenance Recommendations 92

Maintenance Interval Schedule 99

Warranty Section

Warranty Information 147

Reference Information Section

Engine Ratings 148

Customer Service 149

Reference Materials 151

Index Section

Index 154

Foreword

California Proposition 65 Warning

Diesel engine exhaust and some of its constituents are known to the State of California to cause cancer, birth defects, and other reproductive harm.

WARNING – This product can expose you to chemicals including ethylene glycol, which is known to the State of California to cause birth defects or other reproductive harm. For more information go to:

www.P65Warnings.ca.gov

Do not ingest this chemical. Wash hands after handling to avoid incidental ingestion.

WARNING – This product can expose you to chemicals including lead and lead compounds, which are known to the State of California to cause cancer, birth defects, or other reproductive harm. For more information go to:

www.P65Warnings.ca.gov

Wash hands after handling components that may contain lead.

Literature Information

This manual contains safety, operation instructions, lubrication, and maintenance information. This manual should be stored in or near the engine area in a literature holder or literature storage area. Read, study, and keep it with the literature and engine information.

English is the primary language for all Cat publications. The English used facilitates translation and consistency in electronic media delivery.

Some photographs or illustrations in this manual show details or attachments that may be different from your engine. Guards and covers may have been removed for illustrative purposes. Continuing improvement and advancement of product design may have caused changes to your engine which are not included in this manual Whenever a question arises regarding your engine, or this manual, please consult with your Cat dealer for the latest available information.

Safety

This safety section lists basic safety precautions. In addition, this section identifies hazardous, warning situations. Read and understand the basic precautions listed in the safety section before operating or performing lubrication, maintenance, and repair on this product.

Operation

Operating techniques outlined in this manual are basic. They assist with developing the skills and techniques required to operate the engine more efficiently and economically. Skill and techniques develop as the operator gains knowledge of the engine and its capabilities.

The operation section is a reference for operators. Photographs and illustrations guide the operator through procedures of inspecting, starting, operating, and stopping the engine. This section also includes a discussion of electronic diagnostic information.

Maintenance

The maintenance section is a guide to engine care. The illustrated, step-by-step instructions are grouped by fuel consumption, service hours and/or calendar time maintenance intervals. Items in the maintenance schedule are referenced to detailed instructions that follow.

Use fuel consumption or service hours to determine intervals. Calendar intervals shown (daily, annually, etc.) may be used instead of service meter intervals if they provide more convenient schedules and approximate the indicated service meter reading.

Recommended service should be performed at the appropriate intervals as indicated in the Maintenance Interval Schedule. The actual operating environment of the engine also governs the Maintenance Interval Schedule. Therefore, under severe, dusty, wet, or freezing cold operating conditions, more frequent lubrication, and maintenance than is specified in the Maintenance Interval Schedule may be necessary.

The maintenance schedule items are organized for a preventive maintenance management program. If the preventive maintenance program is followed, a periodic tune-up is not required. The implementation of a preventive maintenance management program should minimize operating costs through cost avoidances resulting from reductions in unscheduled downtime and failures.

Maintenance Intervals

Perform maintenance on items at multiples of the original requirement. Each level and/or individual items in each level should be shifted ahead or back depending upon your specific maintenance practices, operation, and application. We recommend that the maintenance schedules be reproduced and displayed near the engine as a convenient reminder. We also recommend that a maintenance record be maintained as part of the engine's permanent record.

See the section in the Operation and Maintenance Manual, “Maintenance Records” for information regarding documents that are accepted as proof of maintenance or repair. Your authorized Cat dealer can assist you in adjusting your maintenance schedule to meet the needs of your operating environment.

Overhaul

Major engine overhaul details are not covered in the Operation and Maintenance Manual except for the interval and the maintenance items in that interval. Major repairs are best left to trained personnel or an authorized Cat dealer. Your Cat dealer offers various options regarding overhaul programs. If you experience a major engine failure, there are also numerous after failure overhaul options available from your Cat dealer. Consult with your dealer for information regarding these options.

Safety Section

i07942225

Safety Messages

SMCS Code: 1000; 7405

There may be several specific safety messages on your generator set. The exact location and a description of the safety messages are reviewed in this section. Become familiar with all safety messages.

Ensure that all the safety messages are legible. Clean the safety messages or replace the safety messages if the words cannot be read or if the illustrations are not visible. Use a cloth, water, and soap to clean the safety messages. Do not use solvents, gasoline, or other harsh chemicals. Solvents, gasoline, or harsh chemicals could loosen the adhesive that secures the safety messages. The safety messages that are loosened could drop off the engine.

Replace any safety message that is damaged or missing. If a safety message is attached to a part of the engine that is replaced, install a new safety message on the replacement part. Your Caterpillar dealer can provide new safety messages.

WARNING

Electrical backfeed into a utility's distribution system can cause property damage, severe injury, or death. Do not connect generator to a building's main switch has been used to isolate the building from the utility power system. For permanent installations, connection shall only be a double throw switch as to isolate the building from a utility power system. Consult a qualified technician for proper use and installation. Comply with all applicable laws and electrical codes.

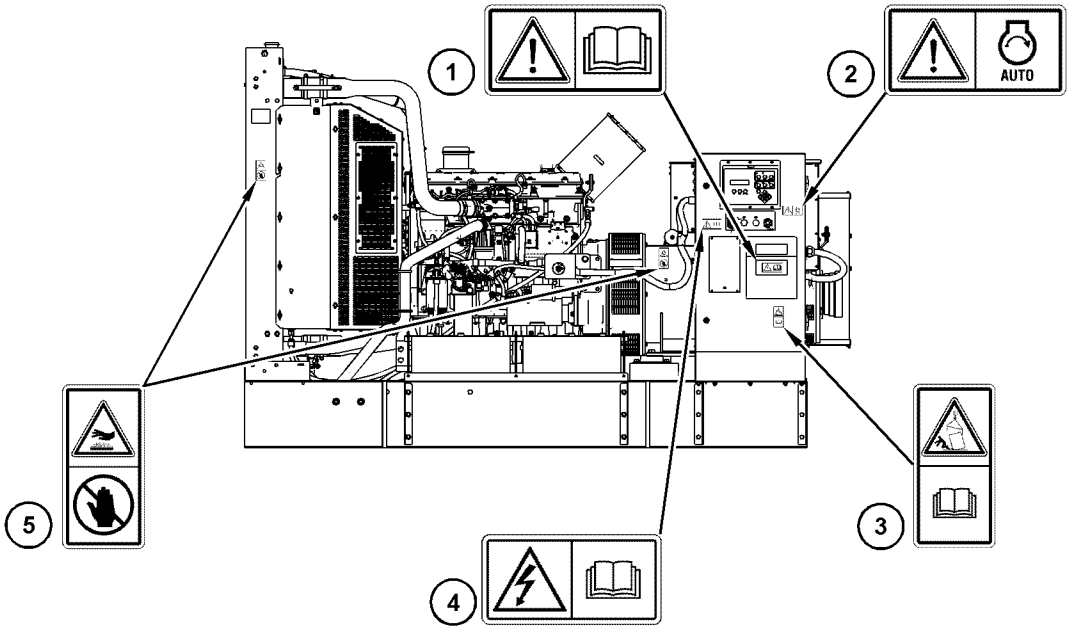

Illustration 1 g03686209

Left side (open generator set)(typical example)

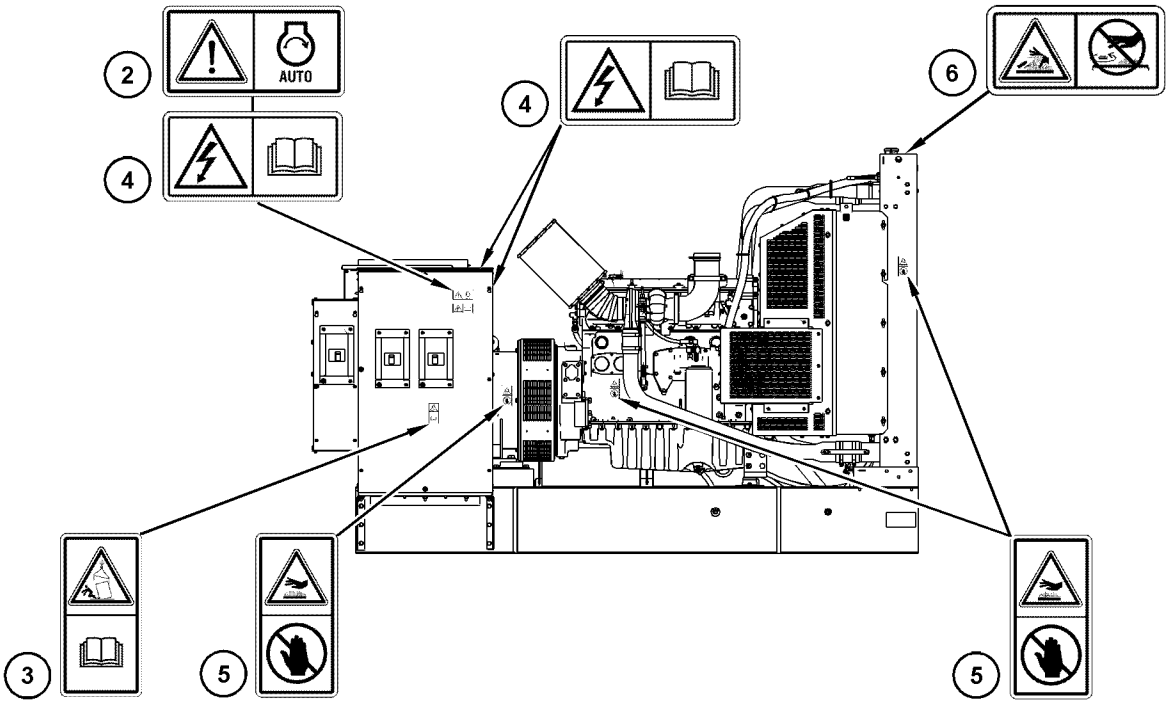

Illustration 2 g03686283

Right side (open generator set)(typical example)

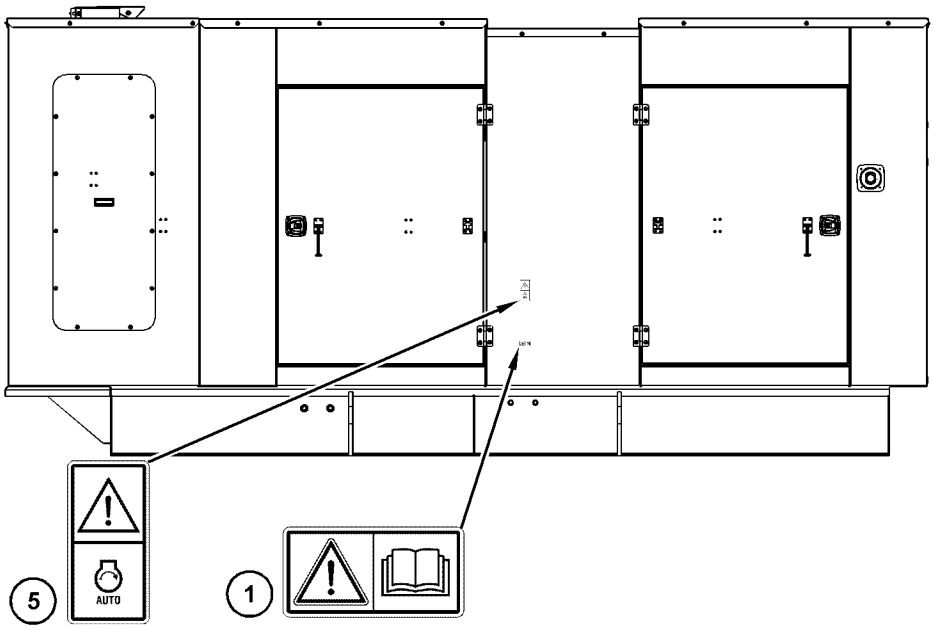

Illustration 3 g03693570

Left side view of the enclosure (typical example)

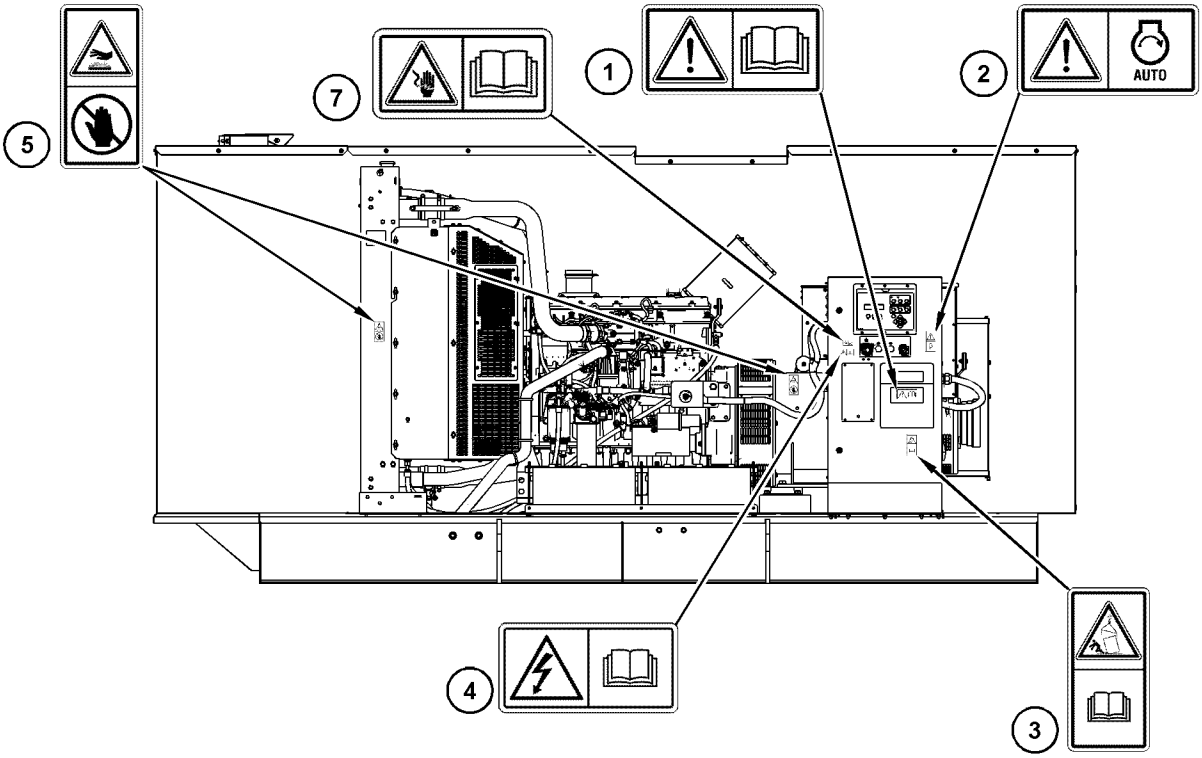

Illustration 4 g03686037

Left side view of the enclosed generator set (typical example)

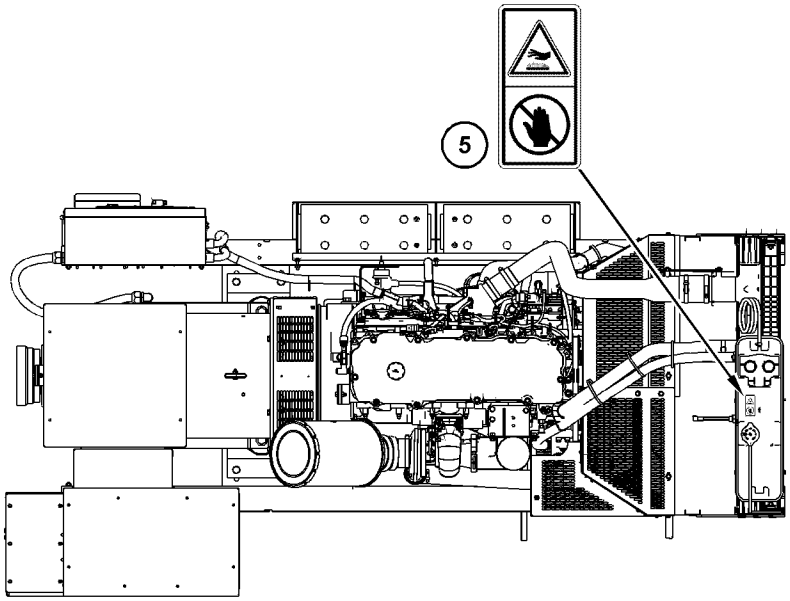

Illustration 5 g03686053
View of the top of the generator set (typical example)

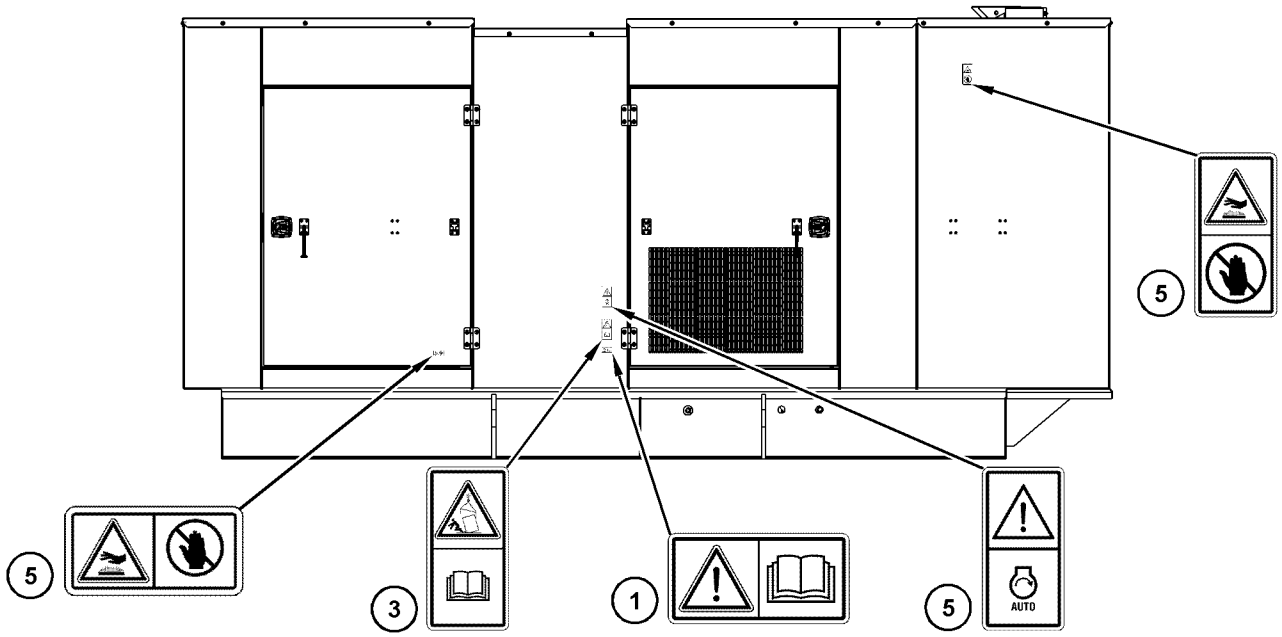

Illustration 6 g03686194

Right side view of the generator set enclosure (typical example)

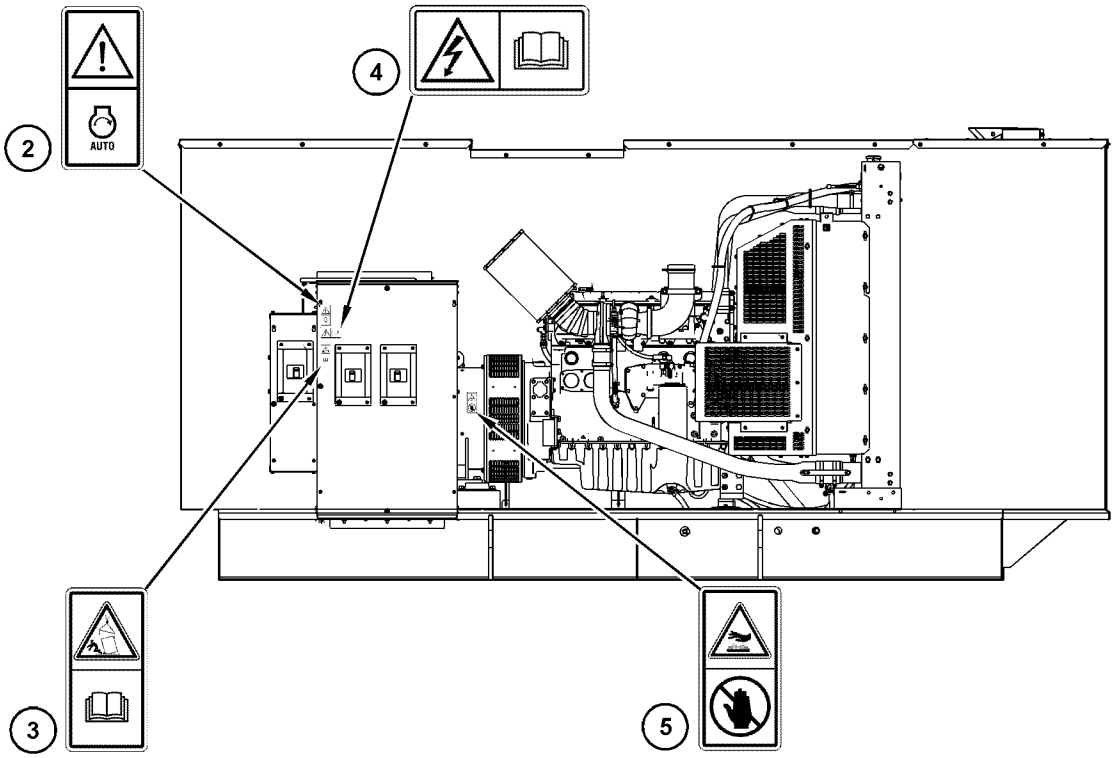

Illustration 7 g03693658

Right side view of the enclosed generator set (typical example)

Universal Warning (1)

The universal safety message is on the terminal box, and on both sides of the enclosure.

Illustration 8 g01370904

WARNING

Do not operate or work on this equipment unless you have read and understand the instructions and warnings in the Operation and Maintenance Manuals. Failure to follow the instructions or heed the warnings could result in serious injury or death.

Automatic Starting (2)

The safety message for automatic starting is on both sides of the generator, on the sides of the terminal box, and on both sides of the enclosure.

Illustration 9 g01392484

WARNING

When the engine is in the AUTOMATIC mode, the engine can start at any moment. To avoid personal injury, always remain clear of the the engine when the engine is in the AUTOMATIC mode.

Crush Falling Object (3)

The safety message concerning falling objects is on both sides of the terminal box, and both sides of the enclosure.

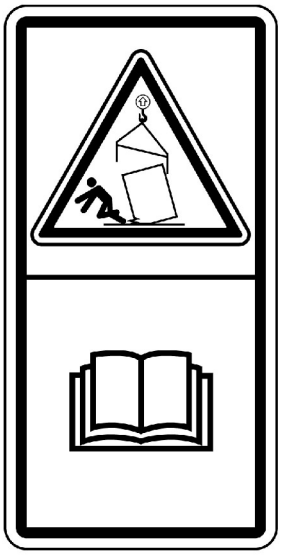

Illustration 10 g01433231

WARNING

Crushing hazard! Read and understand the instructions and warnings in the Operation and Maintenance manual. Failure to follow the instructions or heed the warnings could cause serious injury or death.

Electrocution (4)

The safety message is on both sides of the terminal box, and on both sides of the enclosure.

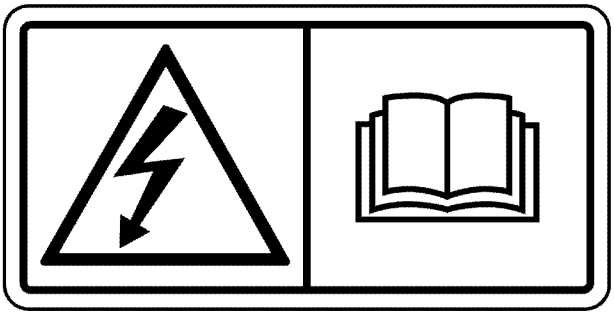

Illustration 11 g03430411

DANGER

DANGER: Shock/Electrocution Hazard-Do not operate this equipment or work on this equipment unless you have read and understand the instructions and warnings in the Operation and Maintenance Manual. Failure to follow the instructions or heed the warnings will result in serious injury or death.

WARNING

Do not connect generator to a utility electrical distribution system unless it is isolated from the system. Electrical feedback into the distribution system can occur and could cause personal injury or death.

Open and secure main distribution system switch, or if the connection is permanent, install a double throw transfer switch to prevent electrical feedback. Some generators are specifically approved by a utility to run in parallel with the distribution system and isolation may not be required. Always check with your utility as to the applicable circumstances.

Hot Surface (5)

The safety message for hot surfaces is on the top of the enclosure group, on both sides of the radiator, and on both sides of the enclosure.

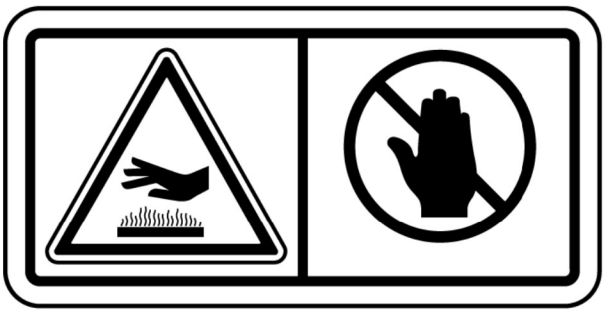

Illustration 12 g01372256

WARNING

Hot parts or hot components can cause burns or personal injury. Do not allow hot parts or components to contact your skin. Use protective clothing or protective equipment to protect your skin.

Hot Fluid Under Pressure (6)

The safety message about hot fluid under pressure is located near the radiator cap.

Illustration 13 g01371640

WARNING

Pressurized system! Hot coolant can cause serious burns, injury or death. To open the cooling system filler cap, stop the engine and wait until the cooling system components are cool. Loosen the cooling system pressure cap slowly in order to relieve the pressure. Read and understand the Operation and Maintenance Manual before performing any cooling system maintenance.

Electrical Shock (7)

The safety message for electrical shock is on the side of the enclosure.

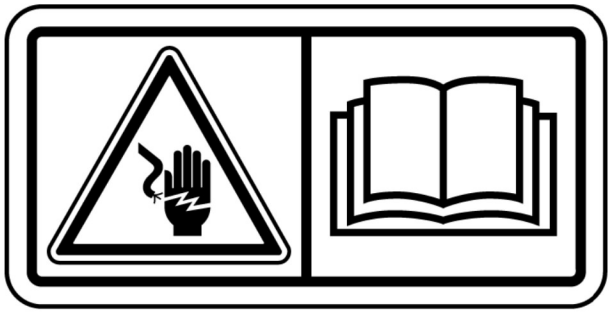

Illustration 14 g01372247

WARNING

WARNING! Shock/Electrocution Hazard! Read and understand the instructions and warnings in the Operation and Maintenance Manual. Failure to follow the instructions or heed the warnings could cause serious injury or death.

i08340590

General Hazard Information

SMCS Code: 1000; 4450; 7405

Illustration 15 g03838041

Attach a “Do Not Operate” warning tag to the start switch or controls before the engine is serviced or repaired. These warning tags (Special Instruction, SEHS7332) are available from your Cat dealer. Attach the warning tags to the engine and to each operator control station. When appropriate, disconnect the starting controls.

Do not allow unauthorized personnel on the engine, or around the engine when the engine is being serviced.

Cautiously remove the following parts. To help prevent spraying or splashing of pressurized fluids, hold a rag over the part that is being removed.

- Filler caps
- Grease fittings
- Pressure taps
- Breathers
- Drain plugs

Use caution when cover plates are removed. Gradually loosen, but do not remove the last two bolts or nuts that are located at opposite ends of the cover plate or the device. Before removing the last two bolts or nuts, pry the cover loose in order to relieve any spring pressure or other pressure.

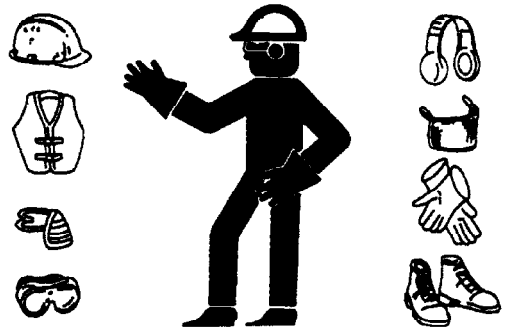

Illustration 16 g00702020

- Wear a hard hat, protective glasses, and other protective equipment, as required.
- When work is performed around an engine that is operating, wear protective devices for ears in order to help prevent damage to hearing.
- Do not wear loose clothing or jewelry that can snag on controls or on other parts of the engine.
- Ensure that all protective guards and all covers are secured in place on the engine.
- Never put maintenance fluids into glass containers. Glass containers can break.
- Use all cleaning solutions with care.
- Report all necessary repairs.

Unless other instructions are provided, perform the maintenance under the following conditions:

- The engine is stopped. Ensure that the engine cannot be started.
- The protective locks or the controls are in the applied position.
- Disconnect the batteries when maintenance is performed or when the electrical system is serviced. Disconnect the battery ground leads. Tape the leads in order to help prevent sparks.
- When starting a new engine, make provisions to stop the engine if an overspeed occurs. If an engine has not been started since service has been performed, make provisions to stop the engine if an overspeed occurs. Shutting down the engine may be accomplished by shutting off the fuel supply and/or the air supply to the engine.
- Do not attempt any repairs that are not understood. Use the proper tools. Replace any equipment that is damaged or repair the equipment.
- Start the engine with the operator controls. Never short across the starting motor terminals or the batteries. This method of starting the engine could bypass the engine neutral start system and/or the electrical system could be damaged.

Pressurized Air and Water

Pressurized air and/or water can cause debris and/or hot water to be blown out which could result in personal injury.

The maximum air pressure for cleaning purposes must be reduced to 205 kPa (30 psi) when the air nozzle is deadheaded and used with effective chip guarding (if applicable) and personal protective equipment. The maximum water pressure for cleaning purposes must be below 275 kPa (40 psi).

When pressurized air and/or pressurized water is used for cleaning, wear protective clothing, protective shoes, and eye protection. Eye protection includes goggles or a protective face shield. Always wear eye protection for cleaning the cooling system.

Avoid direct spraying of water on electrical connectors, connections, and components. When using air for cleaning, allow the machine to cool to reduce the possibility of fine debris igniting when redeposited on hot surfaces.

Fluid Penetration

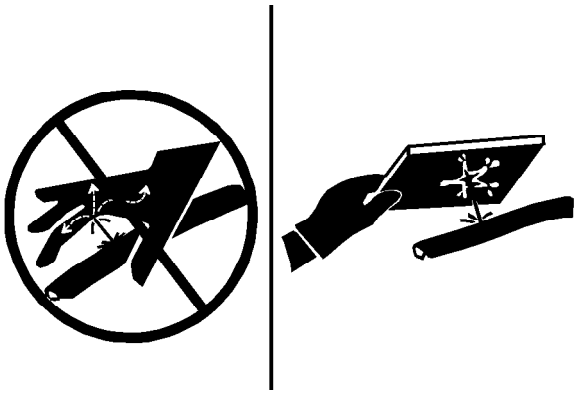

Illustration 17 g00687600

Always use a board or cardboard when you check for a leak. Leaking fluid that is under pressure can penetrate body tissue. Fluid penetration can cause serious injury and possible death. A pin hole leak can cause severe injury. If fluid is injected into your skin, you must get treatment immediately. Seek treatment from a doctor that is familiar with this type of injury.

Containing Fluid Spillage

NOTICE

Care must be taken to ensure that fluids are contained during performance of inspection, maintenance, testing, adjusting, and repair of the product. Be prepared to collect the fluid with suitable containers before opening any compartment or disassembling any component containing fluids.

Refer to Special Publication, NENG2500, “Cat Dealer Service Tool Catalog” or refer to Special Publication, PECJ0003, “Cat Shop Supplies and Tools Catalog” for tools and supplies suitable to collect and contain fluids on Cat products.

Dispose of all fluids according to local regulations and mandates.

Static Electricity Hazard when Fueling with Ultra-low Sulfur Diesel Fuel

The removal of sulfur and other compounds in ultra-low sulfur diesel fuel (ULSD fuel) decreases the conductivity of ULSD and increases the ability of ULSD to store static charge. Refineries may have treated the fuel with a static dissipating additive. Many factors can reduce the effectiveness of the additive over time. Static charges can build up in ULSD fuel while the fuel is flowing through fuel delivery systems. Static electricity discharge when combustible vapors are present could result in a fire or explosion. Ensure that the entire system used to refuel your machine (fuel supply tank, transfer pump, transfer hose, nozzle, and others) is properly grounded and bonded. Consult with your fuel or fuel system supplier to ensure that the delivery system complies with fueling standards for proper grounding and bonding.

⚠ WARNING

Avoid static electricity risk when fueling. Ultra-low sulfur diesel fuel (ULSD fuel) poses a greater static ignition hazard than earlier diesel formulations with a higher sulfur contents. Avoid death or serious injury from fire or explosion. Consult with your fuel or fuel system supplier to ensure the delivery system is in compliance with fueling standards for proper grounding and bonding practices.

Lines, Tubes, and Hoses

Do not bend or strike high-pressure lines. Do not install lines, tubes, or hoses that are damaged.

Repair any fuel lines, oil lines, tubes, or hoses that are loose or damaged. Leaks can cause fires.

Inspect all lines, tubes, and hoses carefully. Do not use bare hands to check for leaks. Always use a board or cardboard for checking engine components for leaks. Tighten all connections to the recommended torque.

Check for the following conditions:

- End fittings that are damaged or leaking
- Outer covering that is chafed or cut
- Wire that is exposed in reinforced hose
- Outer covering that is ballooning locally
- Flexible part of the hose that is kinked or crushed
- Armoring that is embedded in the outer covering

Ensure that all of the clamps, the guards, and the heat shields are installed correctly. Correct installation of these components will help to prevent these effects: vibration, rubbing against other parts and excessive heat during operation.

Inhalation

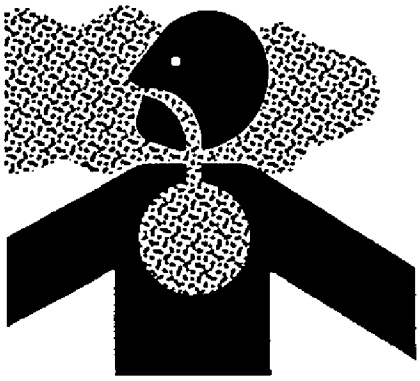

Illustration 18 g02159053

Exhaust

Use caution. Exhaust fumes can be hazardous to your health. If you operate the equipment in an enclosed area, adequate ventilation is necessary.

Hexavalent Chromium

Cat equipment and replacement parts comply with applicable regulations and requirements where originally sold. Caterpillar recommends the use of only genuine Cat replacement parts.

Hexavalent chromium has occasionally been detected on exhaust and heat shield systems on Cat engines. Although lab testing is the only accurate way to know if hexavalent chromium is, in fact, present, the presence of a yellow deposit in areas of high heat (for example, exhaust system components or exhaust insulation) may be an indication of the presence of hexavalent chromium.

Use caution if you suspect the presence of hexavalent chromium. Avoid skin contact when handling items that you suspect may contain hexavalent chromium, and avoid inhalation of any dust in the suspect area. Inhalation of, or skin contact with, hexavalent chromium dust may be hazardous to your health.

If such yellow deposits are found on the engine, engine component parts, or associated equipment or packages, Caterpillar recommends following local health and safety regulations and guidelines, utilizing good hygiene, and adhering to safe work practices when handling the equipment or parts. Caterpillar also recommends the following:

- Wear appropriate personal protective equipment (PPE).
- Wash your hands and face with soap and water prior to eating, drinking, or smoking, and also during rest room breaks, to prevent ingestion of any yellow powder.
- Never use compressed air for cleaning areas suspected of containing hexavalent chromium.
- Avoid brushing, grinding, or cutting materials suspected of containing hexavalent chromium.
- Obey environmental regulations for the disposal of all materials that may contain or have come into contact with hexavalent chromium.
- Stay away from areas that might have hexavalent chromium particles in the air.

Asbestos Information

Cat equipment and replacement parts that are shipped from Caterpillar are asbestos free. Caterpillar recommends the use of only genuine Cat replacement parts. Use the following guidelines when you handle any replacement parts that contain asbestos or when you handle asbestos debris.

Use caution. Avoid inhaling dust that might be generated when you handle components that contain asbestos fibers. Inhaling this dust can be hazardous to your health. The components that may contain asbestos fibers are brake pads, brake bands, lining material, clutch plates, and some gaskets. The asbestos that is used in these components is bound in a resin or sealed in some way. Normal handling is not hazardous unless airborne dust that contains asbestos is generated.

If dust that may contain asbestos is present, there are several guidelines that should be followed:

- Never use compressed air for cleaning.
- Avoid brushing materials that contain asbestos.
- Avoid grinding materials that contain asbestos.
- Use a wet method in order to clean up asbestos materials.
- A vacuum cleaner that is equipped with a high efficiency particulate air filter (HEPA) can also be used.
- Use exhaust ventilation on permanent machining jobs.
- Wear an approved respirator if there is no other way to control the dust.

- Comply with applicable rules and regulations for the work place. In the United States, use Occupational Safety and Health Administration (OSHA) requirements. These OSHA requirements can be found in “29 CFR 1910.1001”.
- Obey environmental regulations for the disposal of asbestos.
- Stay away from areas that might have asbestos particles in the air.

Softwrap

Keep the engine room ventilation operating at full capacity. Wear a particulate respirator that has been approved by the National Institute of Occupational Safety and Health (NIOSH). Wear appropriate protective clothing in order to minimize direct contact. Use good hygiene practices and wash hands thoroughly after handling Softwrap material. Do not smoke until washing hands thoroughly after handling Softwrap material. Clean up debris with a vacuum or by wet sweeping. Do not use pressurized air to clean up debris.

Reference: The applicable material safety data sheets can be found at the following web site by searching using part number or the name:

https://catmsds.cat.com/MSDSSearch/servlet/cat.cis.ecs.msdsSearch.controller.UserIdentificationDisplayServlet

Dispose of Waste Properly

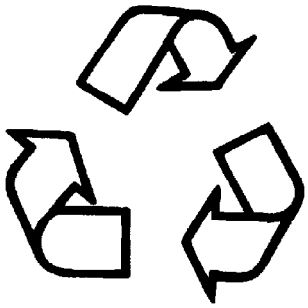

Illustration 19 g00706404

Improperly disposing of waste can threaten the environment. Potentially harmful fluids should be disposed of according to local regulations.

Always use leakproof containers when you drain fluids. Do not pour waste onto the ground, down a drain, or into any source of water.

i08162288

Burn Prevention

SMCS Code: 1000; 4450; 7405

Do not touch any part of an operating engine. Allow the engine to cool before any maintenance is performed on the engine. Relieve all pressure in the air system, hydraulic system, lubrication system, fuel system, and cooling system before any lines, fittings, or related items are disconnected.

Coolant

When the engine is at operating temperature, the engine coolant is hot. The coolant is also under pressure. The radiator and all lines to the heaters or to the engine contain hot coolant.

Any contact with hot coolant or with steam can cause severe burns. Allow cooling system components to cool before the cooling system is drained.

Check that the coolant level after the engine has stopped and the engine has been allowed to cool.

Ensure that the filler cap is cool before removing the filler cap. The filler cap must be cool enough to touch with a bare hand. Remove the filler cap slowly to relieve pressure.

Cooling system conditioner contains alkali. Alkali can cause personal injury. Do not allow alkali to contact the skin, the eyes, or the mouth.

Oils

Hot oil and hot lubricating components can cause personal injury. Do not allow hot oil to contact the skin. Also, do not allow hot components to contact the skin.

Batteries

Electrolyte is an acid. Electrolyte can cause personal injury. Do not allow electrolyte to contact the skin or the eyes. Always wear protective glasses for servicing batteries. Wash hands after touching the batteries and connectors. Use of gloves is recommended.

i08203814

Fire Prevention and Explosion Prevention

SMCS Code: 1000; 4450; 7405

Illustration 20 g00704000

All fuels, most lubricants, and some coolant mixtures are flammable.

Flammable fluids that are leaking or spilled onto hot surfaces or onto electrical components can cause a fire. Fire may cause personal injury and property damage.

Flash fires may result if the covers for the engine crankcase are removed within 15 minutes after an emergency shutdown.

Determine whether the engine will be operated in an environment that allows combustible gases to be drawn into the air inlet system. These gases could cause the engine to overspeed. Personal injury, property damage, or engine damage could result.

If the application involves the presence of combustible gases, consult your Cat dealer for additional information about suitable protection devices.

Remove all flammable materials such as fuel, oil, and debris from the engine. Do not allow any flammable materials to accumulate on the engine.

Store fuels and lubricants in properly marked containers away from unauthorized persons. Store oily rags and any flammable materials in protective containers. Do not smoke in areas that are used for storing flammable materials.

Do not expose the engine to any flame.

Exhaust shields (if equipped) protect hot exhaust components from oil or fuel spray in a line, a hose, or a seal failure. Exhaust shields must be installed correctly.

Do not weld on lines or tanks that contain flammable fluids. Do not flame cut lines that contain flammable fluid. Clean any such lines thoroughly with a nonflammable solvent prior to welding or flame cutting.

Wiring must be kept in good condition. Ensure that all electrical wires are properly routed and securely attached. Check all electrical wires daily. Repair any wires that are loose or frayed before you operate the engine. Clean all electrical connections and tighten all electrical connections.

Eliminate all wiring that is unattached or unnecessary. Do not use any wires or cables that are smaller than the recommended gauge. Do not bypass any fuses and/or circuit breakers.

Arcing or sparking could cause a fire. Secure connections, recommended wiring, and properly maintained battery cables will help to prevent arcing or sparking.

Inspect all lines and hoses for wear or for deterioration. Properly route all hoses. The lines and hoses must have adequate support and secure clamps. Tighten all connections to the recommended torque. Leaks can cause fires.

Properly install all oil filters and fuel filters. The filter housings must be tightened to the proper torque.

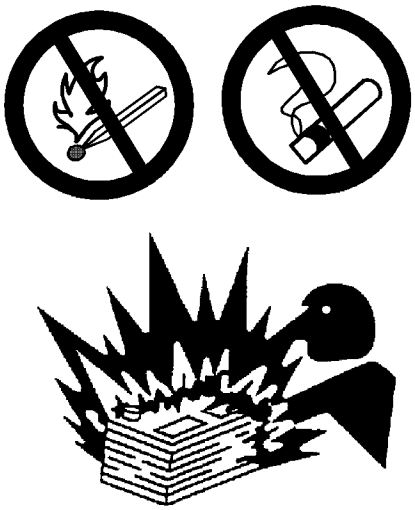

Illustration 21 g02298225

Gases from a battery can explode. Keep any open flames or sparks away from the top of a battery. Do not smoke in battery charging areas.

Never check the battery charge by placing a metal object across the terminal posts. Use a voltmeter or a hydrometer.

Improper jumper cable connections can cause an explosion that can result in injury. Refer to the Operation Section of this manual for specific instructions.

Do not charge a frozen battery. Charging a frozen battery may cause an explosion.

The batteries must be kept clean. The covers (if equipped) must be kept on the cells. Use the recommended cables, connections, and battery box covers when the engine is operated.

Fire Extinguisher

Make sure that a fire extinguisher is available. Be familiar with the operation of the fire extinguisher. Inspect the fire extinguisher and service the fire extinguisher regularly. Obey the recommendations on the instruction plate.

Lines, Tubes, and Hoses

Do not bend high-pressure lines. Do not strike high-pressure lines. Do not install any lines that are bent or damaged.

Repair any lines that are loose or damaged. Leaks can cause fires. Consult your Cat dealer for repair or for replacement parts.

Check lines, tubes, and hoses carefully. Do not use your bare hand to check for leaks. Use a board or cardboard to check for leaks. Tighten all connections to the recommended torque.

Replace the parts if any of the following conditions are present:

- End fittings are damaged or leaking.
- Outer coverings are chafed or cut.
- Wires are exposed.
- Outer coverings are ballooning.
- Flexible parts of the hoses are kinked.
- Outer covers have embedded armoring.
- End fittings are displaced.

Make sure that all clamps, guards, and heat shields are installed correctly to prevent vibration, rubbing against other parts, and excessive heat.

i08162291

Crushing Prevention and Cutting Prevention

SMCS Code: 1000; 4450; 7405

Support the component properly when work beneath the component is performed.

Unless other maintenance instructions are provided, never attempt adjustments while the engine is running.

Stay clear of all rotating parts and of all moving parts. Leave the guards in place until maintenance is performed. After the maintenance is performed, reinstall the guards.

Keep objects away from moving fan blades. The fan blades will throw objects or cut objects.

When objects are struck, wear protective glasses to avoid injury to the eyes.

Chips or other debris may fly off objects when objects are struck. Before objects are struck, ensure that no one will be injured by flying debris.

i08159517

Mounting and Dismounting

SMCS Code: 1000; 4450; 7405

Inspect the steps, the handholds, and the work area before mounting the engine. Keep these items clean and keep these items in good repair.

Mount the engine and dismount the engine only at locations that have steps and/or handholds. Do not climb on the engine, and do not jump off the engine.

Face the engine to mount the engine or dismount the engine. With your feet and hands, always maintain a three-point contact with the steps and designated handholds. Do not use any controls as handholds.

Do not stand on components which cannot support your weight. Use an adequate ladder or use a work platform. Secure the climbing equipment so that the equipment will not move.

Do not carry tools or supplies when you mount the engine or when you dismount the engine. Use a hand line to raise and lower tools or supplies.

i08700072

Sound Information

SMCS Code: 1000

Sound Level Information for Products Required by the Applicable Regional Regulations

- **European Union Countries**
- **United Kingdom**
- **Eurasian Economic Union Countries**
- **Ukraine**
- **Countries that Adopt the “EU Directives”**

The information below applies to only the product configurations that contain regional product marking on or near the Product Identification Plate noted in the “Regional Product Marking” section of this manual.

Table 1

Sound Level		
Region	**Engine Model**	**Maximum Guaranteed Value (GV) dB(A)(1)(2)**
EU UK EEU Ukraine	C9	97
	C13	98
	C15	98
	C18	Not Applicable

(1) Measured at 75% rated power per test method ISO 8528-10.
(2) Maximum GV for generator set per engine model. Refer to the supplied DoC for individual generator set model GV.

The sound levels listed above include both measurement uncertainty and uncertainty due to production variation.

The product sound power level meets the criteria that are specified in the applicable regional regulation. For example:

- “European Directive 2000/14 EC” amended by “2005/88/EC”
- “United Kingdom 2001 No. 1701” amended by “2005 No. 3525”
- “Ukraine Technical Regulation of the Noise Emission in the Environment by Equipment for Use Outdoors”

The criteria are specified on the certificate of the conformance and the accompanying labels.

i08614835

Before Starting Engine

SMCS Code: 1000

NOTICE
For initial start-up of a new or rebuilt engine, and for start-up of an engine that has been serviced, make provision to shut the engine off should an overspeed occur. This may be accomplished by shutting off the air and/or fuel supply to the engine.

WARNING

Engine exhaust contains products of combustion which may be harmful to your health. Always start and operate the engine in a well ventilated area and, if in an enclosed area, vent the exhaust to the outside.

Inspect the engine for potential hazards.

Do not start the engine if there is a “DO NOT OPERATE” warning tag or similar warning tag attached to the start switch. Do not move any of the controls if there is a “DO NOT OPERATE” warning tag or similar warning tag attached to the controls.

Before starting the engine, ensure that no one is on, underneath, or close to the engine. Ensure that the area is free of personnel.

If equipped, ensure that the lighting system for the engine is suitable for the conditions. Ensure that all lights work properly, if equipped.

All protective guards and all protective covers must be installed if the engine must be started to perform service procedures. To help prevent an accident that is caused by parts in rotation, work around the parts carefully.

Do not bypass the automatic shutoff circuits. Do not disable the automatic shutoff circuits. The circuits are provided to help prevent personal injury. The circuits are also provided to help prevent engine damage.

See the Service Manual for repairs and for adjustments.

i08193936

Engine Starting

SMCS Code: 1000

If a warning tag is attached to the engine start switch, DO NOT start the engine. If a warning tag is attached to the controls, DO NOT move the controls. Consult with the person that attached the warning tag before the engine is started.

All protective guards and all protective covers must be installed if the engine must be started to perform service procedures. To help prevent an accident that is caused by parts in rotation, work around the parts carefully.

Start the engine from the operator compartment or from the engine start switch.

Always start the engine according to the procedure that is described in this Operation and Maintenance Manual, “Engine Starting” topic (Operation Section). Knowing the correct procedure will help to prevent major damage to the engine components. Knowing the procedure will also help to prevent personal injury.

To ensure that the jacket water heater (if equipped) and/or the lube oil heater (if equipped) is working properly, check the water temperature gauge and the oil temperature gauge during the heater operation.

Engine exhaust contains products of combustion that can be harmful to your health. Always start the engine and operate the engine in a well-ventilated area. If the engine is started in an enclosed area, vent the engine exhaust to the outside.

Ether

Ether is poisonous and flammable.

Do not inhale ether, and do not allow ether to contact the skin. Personal injury could result.

Do not smoke while ether cylinders are changed.

Use ether in well-ventilated areas.

Use ether with care to avoid fires.

Keep ether cylinders out of the reach of unauthorized persons.

Store ether cylinders in authorized storage areas only.

Do not store ether cylinders in direct sunlight or at temperatures above 49 °C (120 °F).

Discard the ether cylinders in a safe place. Do not puncture the ether cylinders. Do not burn the ether cylinders.

i09160524

Engine Stopping

SMCS Code: 1000

- Remove the load in increments.
- Open the circuit breaker.
- Allow the engine to run for five minutes to cool.
- Stop the engine.
- Ensure 24V is supplied to the dosing cabinet for at least 120 seconds after engine shutdown (engines equipped with SCR systems only).

Use the Emergency Stop Button (if equipped) ONLY in an emergency situation. Do not use the Emergency Stop Button for normal engine stopping. After an emergency stop, DO NOT start the engine until the problem that caused the emergency stop has been corrected.

Stop the engine if an overspeed condition occurs during the initial start-up of a new engine or an engine that has been overhauled. This may be accomplished by shutting off the fuel supply to the engine and/or shutting off the air supply to the engine.

To stop an electronically controlled engine, cut the power to the engine.

i04598035

Electrical System

SMCS Code: 1000; 1400

Never disconnect any charging unit circuit or battery circuit cable from the battery when the charging unit is operating. A spark can cause the combustible gases that are produced by some batteries to ignite.

If the engine must be started by an external electrical source, then always connect the positive jump-start cable “+” to the positive terminal “+” of the battery.

To help prevent sparks from igniting combustible gases that are produced by some batteries, the negative “−” jump-start cable should be connected last from the external power source to the negative “−” terminal of the starting motor. If the starting motor is not equipped with a negative “−” terminal, connect the jump-start cable to the engine block.

Check the electrical wires for wires that are loose or frayed. Tighten all loose electrical wires before the engine is operated. Repair all frayed electrical wires before the engine is started. See the Operation and Maintenance Manual, “Engine Starting” for specific starting instructions.

Grounding Practices

Ensure that the electrical system for the engine is properly grounded. Proper grounding is necessary for optimum engine performance and reliability. Improper grounding will result in uncontrolled electrical circuit paths and in unreliable electrical circuit paths.

Uncontrolled electrical circuit paths can result in damage to main bearings, to crankshaft bearing journal surfaces, and to aluminum components. Uncontrolled electrical circuit paths can also cause electrical noise.

The alternator, the starting motor, and all of the electrical systems MUST be grounded to the negative “–” battery terminal.

For engines with an alternator that is grounded to an engine component, a ground strap MUST connect that component to the negative “–” battery terminal. The component MUST also be electrically isolated from the engine.

A bus bar with a direct path to the negative “-” battery terminal is permissible and recommended for use for all components that require a negative “-” battery connection. Connect the bus bar directly to the negative “-” battery terminal. A bonding cable should also be connected from the cylinder block to the bus bar on the negative “-” battery connection.

Use of a bus bar ensures that the Electronic Control Module (ECM) and all of the components that are connected to the ECM have a common reference point.

i01316742

Engine Electronics

SMCS Code: 1000; 1900

WARNING

Tampering with the electronic system installation or the OEM wiring installation can be dangerous and could result in personal injury or death and/or engine damage.

This engine has a comprehensive, programmable Engine Monitoring System. The Electronic Control Module (ECM) has the ability to monitor the engine operating conditions. If any of the engine parameters extend outside an allowable range, the ECM will initiate an immediate action.

The following actions are available for engine monitoring control: WARNING and DERATE. These engine monitoring modes have the ability to limit engine speed and/or the engine power.

Many of the parameters that are monitored by the ECM can be programmed for the engine monitoring functions. The following parameters can be monitored as a part of the Engine Monitoring System:

- Engine Coolant Level
- Engine Coolant Temperature
- Engine Oil Pressure
- Engine Speed
- Fuel Temperature
- Intake Manifold Air Temperature
- System Voltage

The Engine Monitoring package can vary for different engine models and different engine applications. However, the monitoring system and the engine monitoring control will be similar for all engines.

Note: Many of the engine control systems and display modules that are available for Caterpillar Engines will work in unison with the Engine Monitoring System. Together, the two controls will provide the engine monitoring function for the specific engine application. Refer to the Electronic Troubleshooting Manual for more information on the Engine Monitoring System.

i08231175

Generator Isolating for Maintenance

SMCS Code: 4450

When you service an electric power generation set or when you repair an electric power generation set, follow the procedure below:

1. Stop the engine.

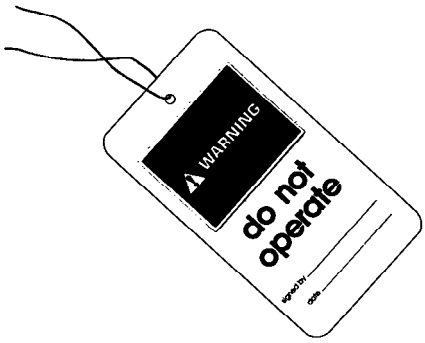

Illustration 22 g00104545

2. Attach a “DO NOT OPERATE” or similar warning tag to the engine prime mover starting circuit. Disconnect the engine starting circuit.

3. Disconnect the generator from the distribution system.

4. Lock out the circuit breaker. Attach a “DO NOT OPERATE” or similar warning tag to the circuit breaker. Refer to the electrical diagram. Verify that all points of possible reverse power flow have been locked out.

5. For the following circuitry, remove the transformer fuses:

- power
- sensing
- control

6. Attach a “DO NOT OPERATE” or similar warning tag to the generator excitation controls.

7. Remove the cover of the generator' terminal box.

8. Use an audio/visual proximity tester to verify that the generator is de-energized. This tester must be insulated for the proper voltage rating. Follow all guidelines to verify that the tester is operational.

9. Determine that the generator is in a de-energized condition. Add ground straps to the conductors or terminals. During the entire work period, these ground straps must remain connected to the conductors and to the terminals.

Product Information Section

General Information

i07942228

Model View Illustrations

SMCS Code: 1000

These illustrations are of both sides of the generator set engine.

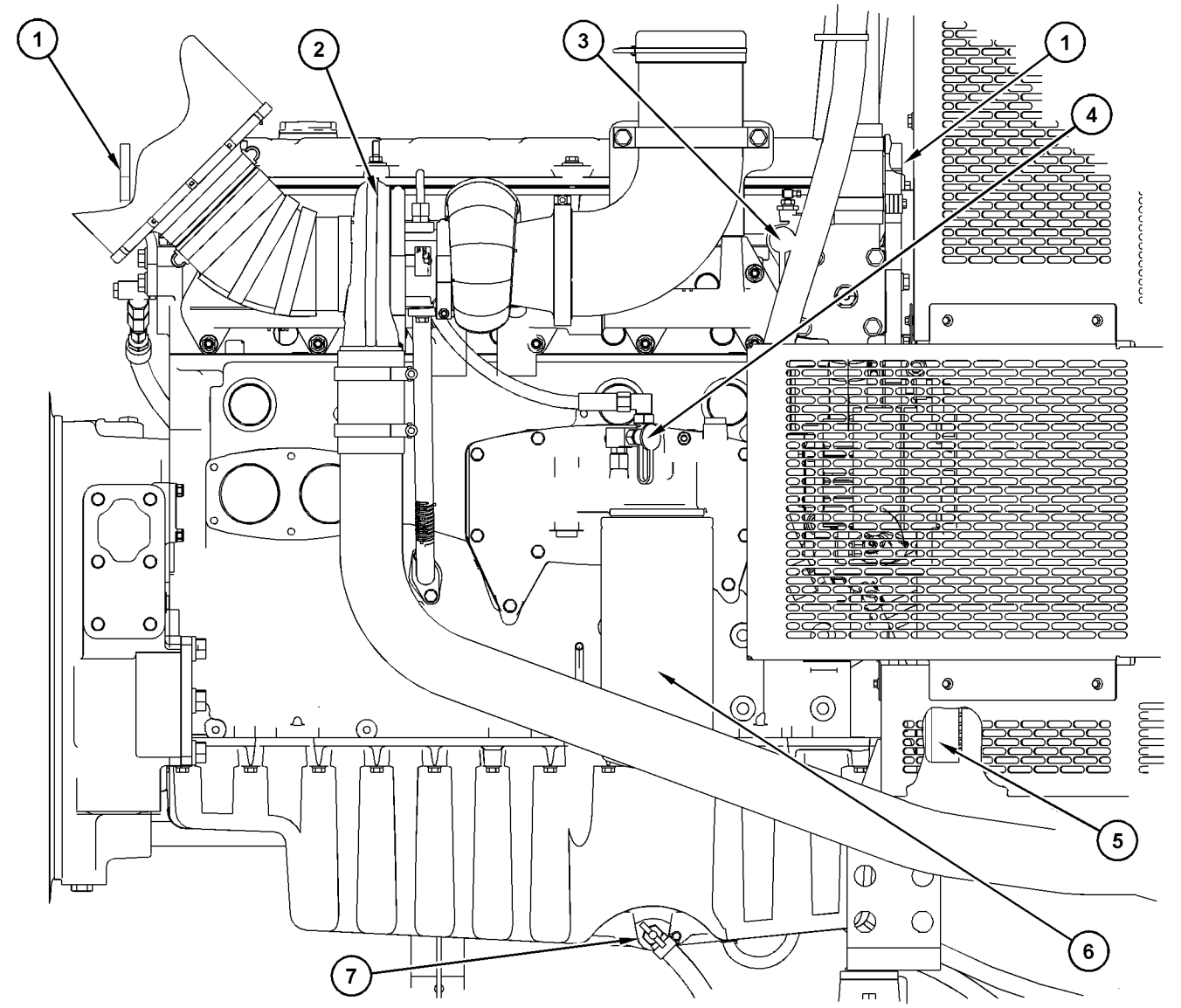

Illustration 23 g03810011

Right-Hand View of Engine (Typical Example)

(1) Lifting Eye (2) Turbocharger

(3) Coolant Sampling Valve

(4) Oil Sampling Valve

(5) Crankshaft Damper

(6) Oil Filter

(7) Oil Pan Drain

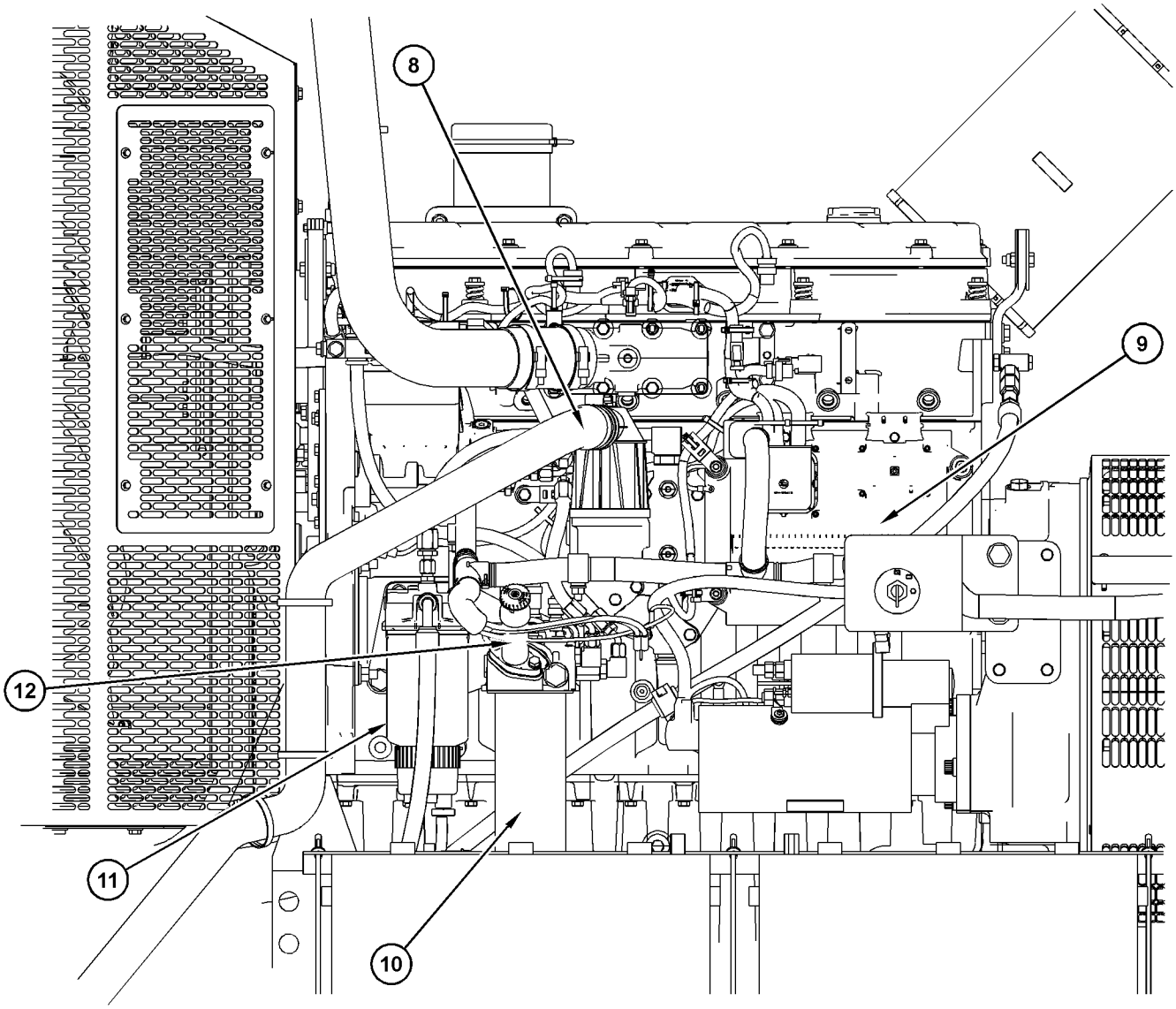

Illustration 24 g03810012

Left-Hand View of Engine (Typical Example)

(8) Crankcase Breather

(9) Electronic Control Module

(10) Secondary Fuel Filter

(11) Primary Fuel Filter (Water Separator)

(12) Fuel Priming Pump

i06101945

Product Description

SMCS Code: 1000; 4450; 4491

Intended Use

This Power Generator is intended to be used to generate electrical power.

Engine Information

The Caterpillar engine has the following characteristics:

- Four stroke cycle
- Direct fuel injection
- Hydraulically actuated electronic unit injection
- Turbocharging
- Radiator cooled

Engine Specifications

Table 2

C9 Engine Specifications	
Arrangement and Cylinders	In-Line 6 cylinder
Bore	112 mm (4.4 inch)
Stroke	149 mm (5.9 inch)
Aspiration	Turbocharged Aftercooled
Displacement	8.8 L (537 in^3)
Firing Order	1-5-3-6-2-4
Rotation (flywheel end)	Counterclockwise
Compression Ratio	16.1:1

Note: The front end of the engine is opposite the flywheel end of the engine. The left side and the right side of the engine are determined from the flywheel end. The number 1 cylinder is the front cylinder.

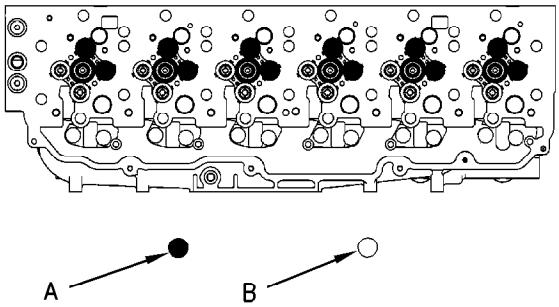

Illustration 25 g00920494

Cylinder and valve location

(A) Exhaust valve
(B) Inlet valve

Electronic Engine Features

These Caterpillar Engines are designed for electronic controls. These engines have an integral on board computer that is called an Electronic Control Module (ECM). The ECM monitors current engine conditions and power requirements. The optimum engine response is calculated and instructions are sent to the engine control systems. The systems respond and the engine responds accordingly. Total engine control is realized through the control of the fuel system and the engine speed/timing system. The electronic engine control system provides the following features:

- Engine speed governing
- Injection timing control
- Automatic air/fuel ratio control
- Torque rise shaping
- Engine monitoring and protection

The ECM provides the electronic governing of fuel delivery in order to dictate the following engine controls: engine speed setpoint, engine timing accuracy, air/fuel ratio control and torque rise fuel setting.

Electronically controlled, mechanically actuated unit injectors combine the pumping, electronic fuel metering (duration and timing), and injecting elements of the fuel system into a single unit. Each cylinder has an independent unit injector.

Fuel metering is controlled by an electrical signal that is sent to the injector solenoid from the ECM. High fuel injection pressures are produced by the unit injector pump. High injection pressures and accurate fuel metering ensure good fuel atomization and thorough combustion. This state-of-the-art technology provides the engine with the following benefits: reduced fuel consumption, controlled smoke emissions and electronically controlled acceleration ramp rates.

The engine timing control and speed control are provided by the ECM. The speed/timing circuit consists of two speed/timing sensors. During engine cranking, the ECM uses the timing signal from the secondary speed/timing sensor. The timing signal from the primary speed/timing sensor is used by the ECM while the engine speed is greater than cranking speed. Utilizing two sensors for this circuit has several advantages. Each of the speed/timing sensors is treated as a discrete component by the ECM. If the signal from one of the sensors becomes suspect the ECM will use the signal from the other sensor in order to keep the engine operational.

Injection duration is also managed by the ECM. The duration of the fuel injection cycle determines the engine speed. The placement of the injection cycle in relation to the crankshaft position will determine the timing advance. The speed/timing circuit provides information to the fuel cooled ECM for detection of crankshaft position and engine speed. This information is utilized by the ECM in order to control desired engine speed and engine timing.

The ECM changes injection timing according to engine operating conditions and demand. Improved timing control results in improved performance. Improvements in several aspects of engine operation will be realized: better engine starting ability, shorter response times, reduced emissions, reduced noise and optimized fuel consumption.

Engine monitoring and interactive diagnostics are also provided by the ECM. Essential engine operating conditions and diagnostic information are monitored and recorded in the ECM memory. The ECM quantifies the information. The information is then compared to an acceptable range of values. If the values are not within the acceptable range, then the diagnostic information is communicated to the operator and the abnormal condition is stored in ECM memory.

For more information on electronic engine features, refer to the Operation and Maintenance Manual, “Engine Features and Controls” topic (Operation Section).

Hydraulic Electronic Unit Injectors

Hydraulically Actuated Electronic Unit Injectors (HEUI) perform the following functions: pumping of fuel, fuel metering and injection timing.

The unit injectors are controlled by the ECM which uses the camshaft position and the engine speed signals from the engine speed/timing sensors and the inlet air pressure sensors. The rated rpm of the engine is identified on the Information Plate.

Engine Cooling and Lubrication

The cooling system consists of the following components:

- Centrifugal pump that is driven by belts
- Water temperature regulator which regulates the engine coolant temperature
- Oil cooler

The engine lubricating oil that is supplied is cooled by an engine oil cooler. The engine lubricating oil is also filtered. Bypass valves provide unrestricted flow of lubrication oil to the engine components during the following conditions:

- High oil viscosity
- Plugged oil cooler or plugged oil filter elements (paper cartridge)

Engine Service Life

Engine efficiency and maximum utilization of engine performance depend on the adherence to proper operation and maintenance recommendations. In addition, use recommended fuels, coolants, and lubricants. Use the Operation and Maintenance Manual as a guide for required engine maintenance.

Expected engine life is predicted by the average power that is demanded. The average power that is demanded is based on fuel consumption of the engine over a time. Reduced hours of operation at full throttle and/or operating at reduced throttle settings result in a lower average power demand. Reduced hours of operation will increase the length of operating time before an engine overhaul is required. For more information, refer to Operation and Maintenance Manual, SEBU7878, “Overhaul Considerations”.

Generator Description

These brushless generators are used with the following loads: mixed loads of motors and lights, SCR-controlled equipment, computer centers, installations of communications and petroleum drilling applications. The elimination of the brushes in the field circuit reduces maintenance. The elimination of the brushes in the field circuit increases reliability. The elimination of brushes provides a higher degree of protection in potentially hazardous atmospheres.

The generator set packages can be utilized for prime power generation or standby power generation. The generator set packages can be used in land-based applications or marine applications.

The generators have four poles. The generators have six or twelve lead configurations. The configuration depends on the frame size. The generators can produce electrical power in either 50 Hz or 60 Hz applications.

Aftermarket Products and Caterpillar Engines

When auxiliary devices, accessories, or consumable (filters, additives, catalysts,) which are made by other manufacturers are used on Cat products, the Cat warranty is not affected simply because of such use.

However, failures that result from the installation or use of other manufacturers devices, accessories, or consumable are NOT Cat defects. Therefore, the defects are NOT covered under the Cat warranty.

Product Identification Information

i08809826

Plate Locations and Film Locations

SMCS Code: 1000; 4450

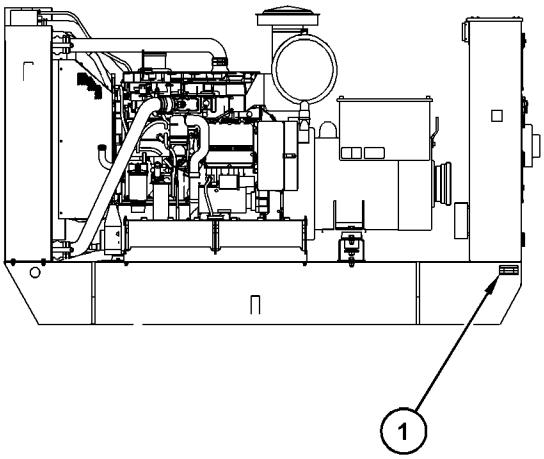

Illustration 26 g03810286

(1) Generator set identification plate

Engine Identification

Cat engines are identified with serial numbers, with performance specification numbers, and with arrangement numbers. In some of the cases, modification numbers are used. These numbers are shown on the Serial Number Plate and the Information Plate that are mounted on the engine.

Cat dealers need these numbers to determine the components that were included with the engine. This information permits accurate identification of replacement part numbers.

Engine Serial Number Plate (1)

The Serial Number Plate is on the rear left side of the valve cover base.

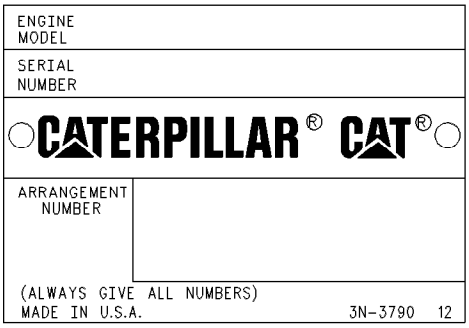

Illustration 27 g00123229

The following information is stamped on the Serial Number Plate: engine serial number, model, and arrangement number.

Engine Information Plate (2)

The Information Plate is near the rear of the top flat surface of the valve cover. The engine information plate faces the right side of the engine.

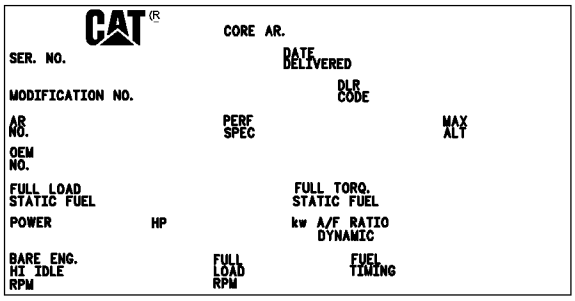

Illustration 28 g01181026

Typical information plate

The following information is stamped on the Information Plate: engine' maximum altitude, horsepower, high idle, full load rpm, fuel settings, and other information.

Generator Serial Number Plate and Information Plate (3)

The generator identification and information plate is on the left side of the generator.

When service is required, the information that is given on this plate should be used. The generator identification and information plate include the following information: serial number, model number, and the rating of the generator set. The generator set consists of the engine and the generator. All pertinent generator data is also included on the plate to provide the information that is necessary to order parts.

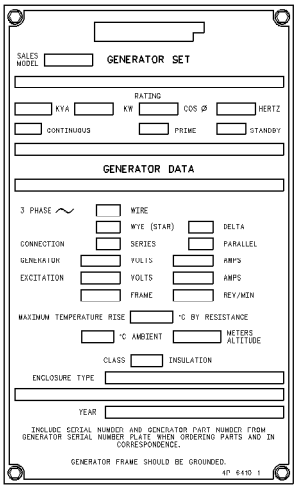

Illustration 29 g00572840

Generator Identification Plate

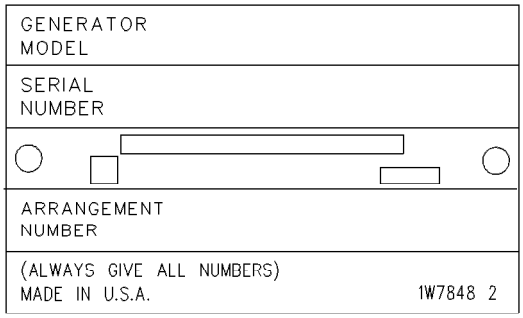

Illustration 30 g00601027
Serial Number Plate

Serial Number Plate for the Genset (4)

The serial number plate for the genset is on the back of the terminal box.

Rating Plate

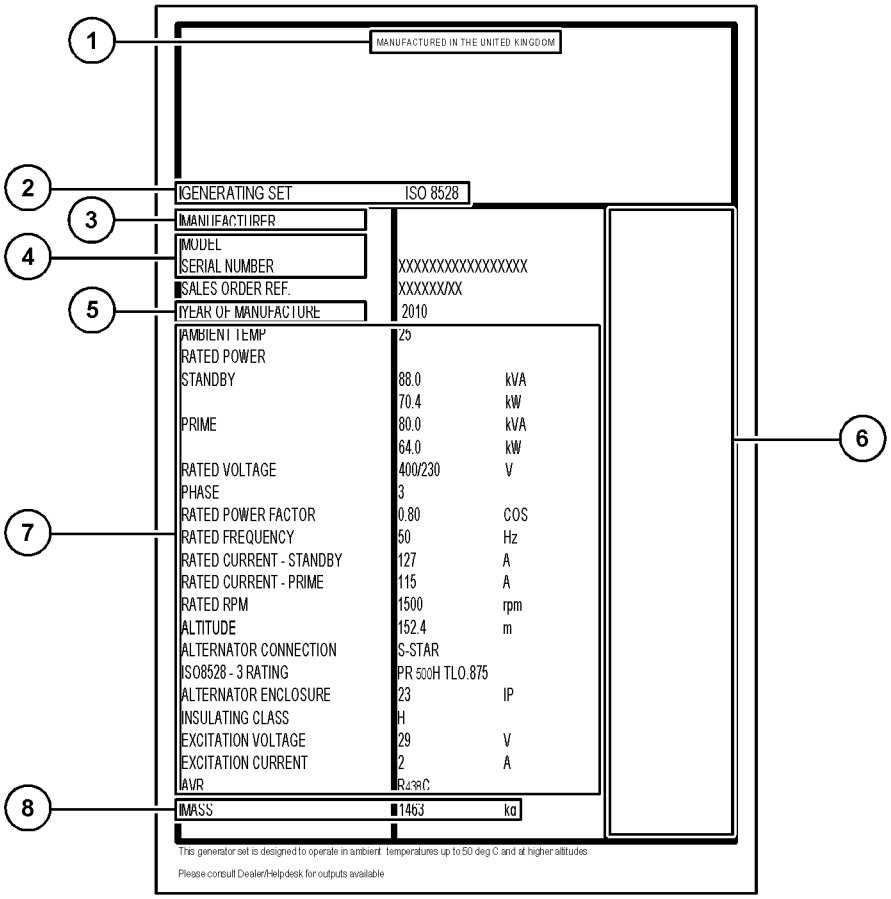

Illustration 31 g06696484

(1) Country of Origin
(2) Name/designation
(3) Manufacturer name
(4) Model and serial number
(5) Month and Year of Manufacture
(6) Eurasian Economic Union Member national language
(7) Basic parameters/features
(8) Mass

Regional Product Marking (If Equipped)

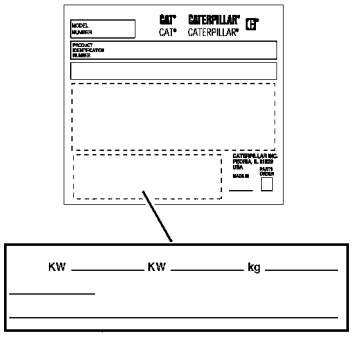

Illustration 32 g06650998

Regional marking plate

This plate is positioned on the bottom-left side of the identification plate.

Note: The regional marking plate is on generator sets that are certified to the applicable requirements that were effective then.

Regional product marking may include one or more of the following:

CE mark

UKCA mark

EAC mark

Gulf Standardization Organization (GSO) mark

Ukraine mark

The following information may be stamped onto the regional marking plate. For quick reference, record this information in the spaces that are provided below.

- Engine Power Primary Engine (kW)_____
- Engine Power for other Engine (If Equipped) _____
- Typical Generator Set Operating Weight (kg)_____
- Year of Construction_____
- Generator Set Type _____

Eurasian Economic Union

The rating plate is placed on generator sets certified to the Eurasian Economic Union requirements effective at the time of market entry.

The Month and Year of Manufacture are on the identification plate.

Manufacturer Information

Manufacturer:

Caterpillar Inc.,
100 N.E. Adams Street
Peoria, Illinois 61629, USA

Entity authorized by the manufacturer at the territory of Eurasian Economic Union:

Caterpillar Eurasia LLC
75, Sadovnicheskaya Emb.
Moscow 115035, Russia

Sound Certification

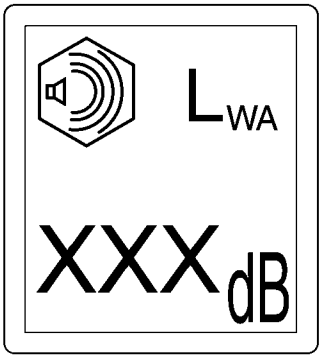

Illustration 33 g06675270
Sound certification film

A typical example of this film is shown.

A certification film is used to verify the environmental sound certification on generator sets that are certified to the regional requirements. A film installed on your generator set will have a value. The value that is listed on the film indicates the guaranteed exterior sound power level (L_{wa}) at the time of manufacture for the conditions that are specified in the following sound test procedures:

- “ISO 3744:1995”
- “European Union 2000/14/EC amended by 2005/88/EC”
- “United Kingdom 2001 No. 1701 amended by 2005 No. 3525”

Declaration of Conformity
(Great Britain)

SMCS Code: 1000

Table 3

A Declaration of Conformity document was provided with the generator set if the product was manufactured to comply with specific requirements for the Great Britain. To determine the details of the applicable legislation, review the complete Declaration of Conformity provided with the product. The extract shown below from a Great Britain Declaration of Conformity for generator sets that are declared compliant to 2008 No. 1597 applies only to those generator sets originally “UKCA” marked by the manufacturer listed and which have not since been modified.

DECLARATION OF CONFORMITY

Manufacturer: Caterpillar Inc., 100 N.E. Adams Street, Peoria, Illinois 61629, USA

Person authorized to compile the Technical File and to communicate relevant part (s) of the Technical File to the Authorities on request:

Standards & Regulations Manager Caterpillar France SAS
40 Avenue Leon-Blum 38000 Grenoble, France

I, the undersigned, _____, hereby certify that the construction equipment specified hereunder

Description:	Generic Denomination:	Power Generation Equipment
	Function:	Powered Generator
	Model/Type:	C9, C13, C15, and C18
	Serial Number:	
	Commercial Name:	Caterpillar

Fulfills all the relevant provisions of these regulations and/or other enactments as listed below:

Legislation	UK Approved Body	Document No.
2008 No. 1597		
2016 No. 1091		
2001 No. 1701 amended by 2005 No. 3525, Note (1)	Note (2)	

Note (1) Schedule-_____ Guaranteed Sound Power Level -_____dB (A)
Representative Equipment Type Sound Power Level - _____dB (A)
Engine Power per ____-____ kW Rated engine speed - _____ rpm
Technical Documentation accessible through person listed above authorized to compile the Technical File

Note (2) If applicable, information related to Approved Body.

Done at: **Signature**

Date: **Name/Position**

Note: The above information was correct as of May 2021, but may be subject to change. Refer to the individual declaration of conformity issued with the machine for exact details.

Declaration of Conformity
(European Union)

SMCS Code: 1000

Table 4

An EU Declaration of Conformity document was provided with the machine if the machine was manufactured to comply with specific requirements for the European Union. To determine the details of the applicable Directives, review the complete EU Declaration of Conformity provided with the machine. The extract shown below from an EU Declaration of Conformity for machines that are declared compliant to “2006/42/EC” applies only to those machines originally “CE” marked by the manufacturer listed and which have not since been modified.

ORIGINAL EU DECLARATION OF CONFORMITY

Manufacturer:CATERPILLAR INC. 100 N.E. ADAMS STREET PEORIA, IL 61629 USA

Person authorized to compile the Technical File and to communicate relevant part (s) of the Technical File to the Authorities on request:

Standards & Regulations Manager,Caterpillar France S.A.S,
40 Avenue Leon-Blum 38000 Grenoble, France

I, the undersigned, _____, hereby certify that the construction equipment specified hereunder

Description:	Generic Denomination:	Power Generation Equipment
	Function:	Power Generator
	Model/Type:	C9, C13, C15, and C18
	Serial Number:	
	Commercial Name:	Caterpillar

Fulfills all the relevant provisions of the following Directives

Directives	Notified Body	Document No.
2006/42/EC	N/A	
2014/30/EU	N/A	
2000/14/EC amended by 2005/88/EC, Note (1)	Note (2)	

Note (1) Annex -_____ Guaranteed Sound Power Level -_____dB (A)
Representative Equipment Type Sound Power Level - _____dB (A)
Engine Power per ____-____ kW Rated engine speed - _____ rpm
Technical Documentation accessible through person listed above authorized to compile the Technical File

Note (2) Notified body name and address

Done at: **Signature**

Date: **Name/Position**

Note: The above information was correct as of August 2021, but may be subject to change. Refer to the individual declaration of conformity issued with the product for exact details.

i07424348

Generator Set Intended for Stationary Use Only

SMCS Code: 1000; 7002

THE FOLLOWING NOTICE IS INTENDED ONLY FOR UNITS SHIPPED INTO THE UNITED STATES OF AMERICA, CANADA OR UNITED STATES TERRITORIES

For units marked as being intended for stationary use only, which are used in the United States of America, United States Territories or Canada, the following restrictions apply:

This generating set may only be used in stationary applications, as defined by the Environmental Protection Agency (EPA) Regulation in Title 40 of the Code of Federal Regulations (40 CFR Part 89.2(2)).

The definition of stationary, per the regulations, is that a) the unit will remain at a single site at a building, structure, facility or installation for more than 12 consecutive months, or b) will remain at a seasonal source during it's full annual operation period, as defined in 40 CFR 89.2(2)(iii).

The following United States Territories must comply with United States EPA regulations: Puerto Rico, Virgin Islands, Guam, American Somoa and the Commonwealth of the Northern Mariana Islands.

i08756279

Emissions Certification Film

SMCS Code: 1000; 7405

Consult your Cat dealer for an Emission Control Warranty Statement.

The emission certification film is located on the engine or inside the engine enclosure.

i04397923

Reference Information

SMCS Code: 1000; 4450

Information for the following items may be needed to order parts. Locate the information for your engine. Record the information in the appropriate space. Make a copy of this list for a record. Retain the information for future reference.

Record for Reference

Engine Model _____

Engine Serial Number _____

Engine Arrangement Number _____

Modification Number _____

Engine Low Idle Speed _____

Engine Full Load Speed _____

Performance Specification Number _____

Primary Fuel Filter Element _____

Secondary Fuel Filter Element _____

Engine Oil Filter Element _____

Auxiliary Oil Filter Element _____

Supplemental Coolant Additive Maintenance Element _____

Engine Oil Capacity _____

Total Cooling System Capacity _____

Air Cleaner Element _____

Fan Drive Belt _____

Alternator Belt _____

Generator Arrangement Number _____

Generator Set Serial Number _____

Generator Frame Size _____

Voltage Rating _____

kW Rating _____

Excitation System

AREP _____

Self-Excited _____

Permanent Magnet _____

Operation Section

Lifting and Storage

i07942232

Product Lifting

SMCS Code: 7000; 7002

NOTICE
Improper lifting or tiedowns can allow load to shift and can cause injury and damage.

Use a hoist to remove heavy components. Use an adjustable lifting beam, if necessary. Some removals require lifting fixtures to obtain proper balance and safety.

Lifting eyes are designed and installed for the specific arrangement. Alterations to the lifting eyes and/or the engine make the lifting eyes and the lifting fixtures obsolete. If alterations are made, ensure that proper lifting devices are provided. Consult your Caterpillar dealer for information regarding fixtures for proper engine lifting.

Illustration 34 g01034418
Label for lifting eye

Lifting labels are on the lifting eyes and on the bottom of the genset. Lifting labels may be placed in other locations also. These labels designate the proper lifting locations for the genset and the weight that may be safely lifted from the location. Some gensets may be lifted at the base of the genset. Use the configuration that is on the lifting label to lift the generator set. Use lifting devices that are properly rated for the weight of the generator set.

On some enclosed generator sets, it may be necessary to remove a top panel of the enclosure to access the lifting eye.

Note: Lifting a generator set with a fuel tank requires special equipment and procedures. Do not lift the unit with fuel in the fuel tank.

A special lifting device is available for lifting the engine out of the genset. Consult your Caterpillar dealer for further information.

A combination of the following labels will be on the genset. Take care to review the weight limits before lifting the genset.

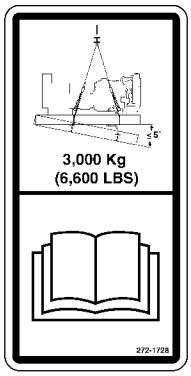

Illustration 35 g01186369
Typical example

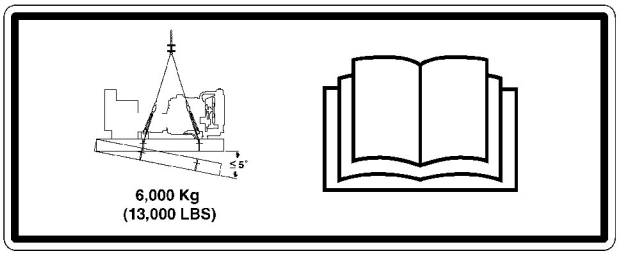

Illustration 36 g03696693
Typical example

i03978571

Product Storage

SMCS Code: 7002

Note: If storage for more than 1 yr is necessary, contact your local Cat dealer for the preferred storage procedure.

Engine

Storage (Less Than One Year)

If an engine is not used, oil can run off the following parts that normally receive lubrication: cylinder walls, piston rings, main bearings, connecting rod bearings, crankshaft and gears.

This lack of lubricant allows corrosion to begin to appear on the metal. This condition is worse in areas of high humidity.

When the engine is started again, metal to metal contact will cause wear before the surfaces receive oil. To minimize this wear, use the starter to turn the engine with the throttle in the FUEL OFF position. When oil pressure is shown on the pressure gauge, start the engine.

1. Clean the engine of any dirt, rust, grease, and oil. Inspect the exterior. Paint areas that contain paint damage with a good quality paint.

2. Remove dirt from the air cleaners. Check all seals, gaskets, and the filter element for damage.

3. Apply lubricant to all points in this Operation and Maintenance Manual, “Maintenance Interval Schedule”.

4. Drain the crankcase oil. Replace the crankcase oil and change the oil filters. For the proper procedure, refer to this Operation and Maintenance Manual.

5. If the engine is equipped with an air starting motor, fill the reservoir with the following mixture: 50 percent volatile corrosion inhibitor oil (<nomen>VCI oil</nomen>) and 50 percent engine oil.

6. Add VCI oil to the crankcase oil. The volume of VCI oil in the crankcase oil should be 3 to 4 percent.

Note: If the engine crankcase is full, drain enough engine oil so the mixture can be added.

7. Remove the air filter elements. Turn the engine at cranking speed with the throttle control in FUEL OFF position. Use a sprayer to add a mixture of 50 percent VCI oil and 50 percent engine oil into the air inlet or turbocharger inlet.

Note: The mixture of VCI oil can be added to the inlet by removing the plug for checking turbocharger boost pressure. The minimum application rate for the VCI oil mixture is 5.5 mL per L (3 oz per 1000 cu in) of engine displacement.

8. Use a sprayer to apply a mixture of 50 percent VCI oil and 50 percent crankcase oil into the exhaust openings. The minimum application rate for the oil mixture is 5.5 mL per L (3 oz per 1000 cu in) of engine displacement. Seal the exhaust pipe and seal any drain holes in the muffler.

9. Remove the fuel from the secondary fuel filter housing. Alternately, empty and reinstall the spin-on fuel filter element in order to remove any dirt and water. Drain any sleeve metering fuel pump.

Clean the primary fuel filter. Fill with calibration fluid or kerosene. Install the primary fuel filter and operate the priming pump. This procedure will send clean oil to the secondary filter and the engine.

Open the fuel tank drain valve in order to drain any water and dirt from the fuel tank. Apply a spray of calibration fluid or kerosene at the rate of 30 mL per 30 L (1 oz per 7.50 gal US) of fuel tank capacity in order to prevent rust in the fuel tank. Add 0.15 mL per L (.02 oz per 1 gal US) of commercial biocide such as Biobor JF to the fuel.

Apply a small amount of oil to the threads on the fuel tank filler neck and install the cap. Seal all openings to the tank in order to prevent evaporation of the fuel and as a preservative.

10. Remove the fuel nozzles or spark plugs. Apply 30 mL (1 oz) of the mixture of oils (50 percent VCI oil and 50 percent engine oil) into each cylinder.

Use a bar or a turning tool in order to turn over the engine slowly. This procedure puts the oil on the cylinder walls. Install all fuel nozzles or spark plugs and tighten to the correct torque.

11. Spray a thin amount of a mixture of 50 percent VCI oil and 50 percent engine oil onto the following components: flywheel, ring gear teeth and starter pinion. Install the covers in order to prevent evaporation of the vapors from the VCI oil.

12. Apply a heavy amount of Cat Multipurpose Grease (MPGM) to all outside parts that move, such as rod threads, ball joints, linkage.

Note: Install all covers. Ensure that tape has been installed over all openings, air inlets, exhaust openings, the flywheel housing, the crankcase breathers, the dipstick tubes.

Ensure that all covers are airtight and weatherproof. Use a waterproof weather resistant tape such as Kendall No. 231 or an equivalent. Do not use duct tape. Duct tape will only seal for a short time.

13. Under most conditions, removing the batteries is the best procedure. As an alternative, place the batteries in storage. As needed, periodically charge the batteries while the batteries are in storage.

If the batteries are not removed, wash the tops of the batteries until the tops are clean. Apply an electrical charge to the batteries in order to obtain a specific gravity of 1.225.

Disconnect the battery terminals. Place a plastic cover over the batteries.

Note: For additional information, refer to Special Instruction, SEHS7633, “Battery Test Procedure”.

14. Loosen all belts.

15. Place a waterproof cover over the engine. Ensure that the engine cover is secure. The cover should be loose enough to allow air to circulate around the engine in order to prevent damage from condensation.

16. Attach a tag with the storage date to the engine.

17. Remove the waterproof cover at 2 month or 3 month intervals in order to check the engine for corrosion. If the engine has signs of corrosion, repeat the protection procedure.

Coolant System

Completely fill the cooling system before storage.

Refer to this Operation and Maintenance Manual, “Refill Capacities and Recommendations” for more information about coolants.

Removal from Storage

1. Remove all outside protective covers.

2. Change the oil and filters.

3. Check the condition of the fan and alternator belts. Replace the belts, if necessary. Refer to this Operation and Maintenance Manual, “Belts - Inspect/Adjust/Replace” for the correct procedure.

4. Replace the fuel filter elements.

5. Remove the plastic covers from the air cleaner elements.

6. Use a bar or a turning tool in order to turn the engine in the normal direction of rotation. The procedure ensures that no hydraulic locks or resistance exist.

7. Before starting the engine, remove the valve cover or covers. Put a large amount of engine oil on the camshaft, cam followers, and valve mechanism in order to prevent damage to the mechanism.

8. Pressure lubricate the engine before starting the engine. Pressure lubricating the engine ensures immediate lubrication and prevents damage to the engine during the first few minutes of engine operation. If the engine is not equipped with a prelube pump, contact your Cat dealer for information about lubrication of the engine before starting the engine.

9. Check the condition of all rubber hoses. Replace any worn hoses. Replace any damaged hoses.

10. Before start-up, test the cooling system for a 3 percent ro a 6 percent concentration of coolant conditioner. Add liquid coolant conditioner or a coolant conditioner element, if equipped.

Test the coolant mixture for proper nitrite level. If necessary, adjust the coolant mixture.

Prime the engine with clean diesel fuel before starting.

11. Ensure that the cooling system is clean. Ensure that the system is full. Ensure that the system has the correct amount of supplemental cooling system conditioner.

12. On the first day of operation, check the entire engine several times for leaks and correct operation.

13. If the engine was removed from storage in which temperatures of less than -12°C (10°F) were encountered, refer to Service Manual, SEBU5898, “Cold Weather Recommendations Operation and Maintenance”.

Generator

Storage (Less Than One Year)

When a generator is in storage, moisture condenses in the windings. To minimize condensation, always place the generator in a dry storage area. Seal all openings with tape.

If a brush-type generator (SRCR) is being stored, lift the brushes off the slip ring to prevent chemical damage to the slip ring. Attach a tag to the generator which states that the brushes have been lifted.

Perform a resistance check of the windings. Record this reading. This check is done in order to provide a base line for determining whether moisture or winding deterioration occurs during storage.

Removal From Storage

Remove all protective covers. Reseat the brushes on the slip ring for SRCR generators.

Before start-up of a generator, use a megohmmeter to check insulation resistance for moisture and/or foreign material. Refer to this Operation and Maintenance Manual, “Generator Start-up Check List” for the procedure. A resistance reading of 1 megohm or less indicates that the winding has absorbed too much moisture.

Use one of the following methods for drying the generator in order to remove moisture which is caused by high humidity or dampness:

1. Place the generator in an oven which is no hotter than 85°C (185°F) for 4 hours.

2. Use a canvas enclosure around the generator and heating lamps to increase the ambient temperature. Provide an opening in the top of the canvas in order to release the moisture.

3. Send a low voltage current through the windings in order to increase the temperature of the windings to 85°C (185°F).

Megohmmeter Checks

Test the main stator windings with a megohmmeter in the following situations:

1. Before the initial start-up of the generator set

2. Every 3 months if the generator operates in a humid environment

3. If the generator has not been run under load for3 months or more

These intervals are only recommendations. Perform a megohmmeter test more frequently if the following conditions exist: extreme humidity, salty environment and the last megohmmeter test was close to 1 megohm.

Additional Information

For additional information about storage procedures, refer to Special Instruction, SEHS9031, “Storage Procedure for Cat Products”.

Installation

i08581121

Product Installation

SMCS Code: 1000; 1404; 4450; 7002

Assembly Instructions for Partially Completed Machinery

- Per EU Machinery Safety Directive 2006/42/EC
- Per UK Regulation - 2008 No. 1597

To ensure that this product is correctly installed and does not compromise safety and health, refer to the material in the appropriate Application and Installation Guide. Also, refer to the material contained in this Operations and Maintenance Manual.

Receiving Inspection

If the generator is received during cold weather, allow the unit to reach room temperature before you remove the protective packing material. Warming the generator to room temperature will prevent the following problems:

- Water condensation on cold surfaces
- Early failures due to wet windings
- Early failures due to wet insulating materials

Unpacking and Storage

Moving the Generator

WARNING

Improper lift rigging can allow unit to tumble causing injury and damage.

NOTICE

Do not use the engine lifting eyes to remove the engine and generator together.

Unpack the equipment with care to avoid scratching painted surfaces. Move the unit to the mounting location. The unit can be moved by either of the following methods:

- Attach an overhead crane to the eyebolts that are installed on the generator frame.
- Use a lift truck to lift the generator.

The hoist and the hoist cables should have a rating that is greater than the weight of the generator. When the unit is moved, ensure that the generator is completely supported by the lift truck fork tines. Also ensure that the generator is balanced on the lift truck fork tines. Slide the fork tines beneath the attached skid to lift the generator.

Storage

Short Time Storage

If the generator is not installed immediately, store the generator in a clean area. This area should also have the following conditions: low humidity, stable humidity, and stable temperature. Space heaters must be energized to keep condensation from the windings. All accessory equipment that is supplied with the unit should be stored with the generator. The combined unit should be covered with a durable cover to protect against the following contaminants:

- Dust
- Dirt
- Moisture
- Other airborne abrasive material

Long Time Storage

A storage period more than 6 months should be preceded by the following preparation:

1. Install desiccant bags inside the exciter cover and install desiccant bags inside the screen of the fan.
2. Seal the unit in a covering of plastic or other material that has been designed for that purpose.
3. Adequately tag the generator. This tag will ensure that preservative greases and desiccant bags are removed before the unit is placed in operation.

Bearing Inspection

Ball bearing generators use grease. This grease is subject to deterioration. If the generator is stored longer than 1 year, new ball bearings should be installed. These bearings should be greased to the proper level prior to being put into operation. If inspection indicates that bearings are free of rust or corrosion, and no noise or excessive vibration appear on start-up, replacement is not necessary.

Location

The location of the generator must comply with all local regulations. The location of the generator must also comply with all special industrial regulations. Locate the generator in an area that meets the following requirements:

- Clean
- Dry
- Well ventilated
- Easily accessible for inspection and maintenance

Access to the radiator filler cap is on the roof of the enclosure. There must be safe access to the roof of the enclosure. There must be sufficient clearance above the roof of the enclosure.

Do not obstruct air inlet openings. Do not obstruct discharge openings. Air flow must reach these openings. If the generator is exposed to harsh environmental conditions, the generator can be modified in the field to add filters and space heaters. In addition, a more rigid periodic maintenance schedule should be established.

Load Connections - Generator Set Output

For units equipped with T-frame breaker: Installer shall connect conductors in accordance with separate T-frame beaker terminal instruction provided with unit. All conductors shall be rated 90° C (194° F) or greater.

Batteries

Servicing of batteries is to be performed or supervised by personnel knowledgeable of batteries and the required precautions. Keep unauthorized personnel away from batteries.

When replacing batteries, use the same number and the following type batteries:

Cat Premium High Output (PHO) Batteries

Standard battery is 115-2421, non-vented, BCI Group 31, Calcium Lead Alloy Grid Design with SAE Posts

Oversize battery is 9x-9730, vented, BCI Group 4D, Low Maintenance, Hybrid Construction

⚠ CAUTION

Do not dispose of battery or batteries in a fire. The battery is capable of exploding.

⚠ CAUTION

Do not open or mutilate the battery or batteries. Released electrolyte has been know to be harmful to the skin and eyes and to be toxic.

⚠ CAUTION

A battery presents a risk of electrical shock and high short circuit current.

1. Remove watches, rings, or other metal objects, 2) Use tools with insulated handles

⚠ CAUTION

The electrolyte is a dilute sulfuric acid that is harmful to the skin and eyes. It is electrically conductive and corrosive.

Electrolyte is electrically conductive and corrosive. The following procedures are to be observed:

1. Wear full eye protection and protective clothing,
2. Where electrolyte contacts the skin, wash electrolyte off immediately with water,
3. Where electrolyte contacts the eyes, flush thoroughly and immediately with water and seek medical attention, and
4. Spilled electrolyte is to be washed down with an acid neutralizing agent. A common practice is to use a solution of 1 lb (500 g) bicarbonate of soda to 1 US gal (4 L) of water. The bicarbonate of soda solution is to be added until the evidence of reaction (foaming) has ceased. The resulting liquid is to be flushed with water and the area dried.

⚠ CAUTION

Lead-acid batteries present a risk of fire because they generate hydrogen gas.

The following procedures are to be followed:

1. DO NOT SMOKE when near batteries,
2. DO NOT cause flame or spark in battery area, and
1. Discharge static electricity from body before touching batteries by first touching a grounded metal surface.

Note: The ambient package rating is 40° C (104° F).

Features and Controls

i04537584

Alarms and Shutoffs

SMCS Code: 7400

Alarms and shutoffs are electronically controlled. The operation of all alarms and shutoffs utilize components which are actuated by a sensing unit. The alarms and shutoffs are set at critical operating temperatures, pressures, or speeds in order to protect the engine from damage.

The alarms function in order to warn the operator when an abnormal operating condition occurs. The shutoffs function in order to shut down the engine when a more critical abnormal operating condition occurs. The shutoffs help to prevent damage to the equipment.

If an engine protective device shuts off the engine, always determine the cause of the shutoff. Make the necessary repairs before attempting to start the engine.

Become familiar with the following information:

- Types of the alarm and shutoff controls
- Locations of the alarm and shutoff controls
- Conditions which cause each control to function
- Resetting procedure that is required before starting the engine

i03671082

Battery Disconnect Switch
(If Equipped)

SMCS Code: 1411

The battery disconnect switch is on the left side of the engine near the rear of the engine.

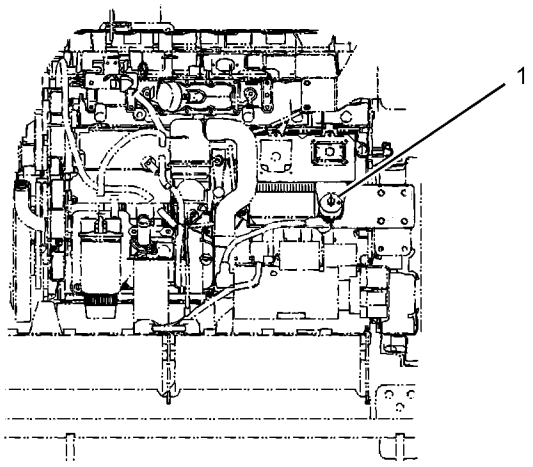

Illustration 37 g01970753

(1) Battery disconnect switch

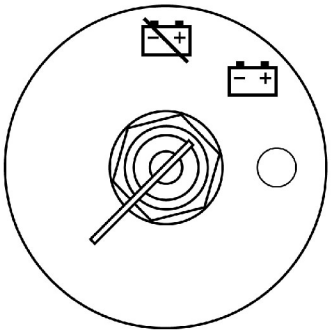

Illustration 38 g01970893

ON – To activate the electrical system, insert the disconnect switch key and turn the battery disconnect switch clockwise. The battery disconnect switch must be turned to the ON position before you start the engine.

OFF – To deactivate the electrical system, turn the battery disconnect switch counterclockwise to the OFF position.

The battery disconnect switch operates differently than the engine start switch. When the battery disconnect switch is in the OFF position, the electrical system is disabled. When the engine start switch is turned to the OFF position and the battery disconnect switch is turned to the ON position, the battery remains connected to the entire electrical system.

Turn the battery disconnect switch to the OFF position and remove the disconnect switch key when you service the electrical system or other components on the engine.

Turn the battery disconnect switch to the OFF position and remove the disconnect switch key if you do not operate the engine for an extended period of a month or more. This will prevent drainage of the battery.

NOTICE
Never move the battery disconnect switch to the OFF position while the engine is operating. Serious damage to the electrical system could result.

To ensure that no damage to the engine occurs, verify that the engine is fully operational before cranking the engine. Do not crank an engine that is not fully operational.

Perform the following procedure in order to check the battery disconnect switch for proper operation:

1. With the battery disconnect switch in the ON position, verify that electrical components in the operator compartment are functioning. Verify that the hour meter is displaying information. Verify that the engine will crank.

2. Turn the battery disconnect switch to the OFF position.

3. Verify that the following items are not functioning: electrical components in the operator compartment, hour meter and engine cranking. If any of the items continue to function with the battery disconnect switch in the OFF position, consult your Caterpillar dealer.

i01324368

Cold Start Strategy

SMCS Code: 1450; 1456; 1900

The cold start strategy utilizes the input from the coolant temperature sensor to improve starting in low temperatures. The cold start strategy helps to provide the following features:

- Quicker cold starts
- White smoke cleanup
- Decreased deep cycling of the battery
- Extended engine life

When the coolant temperature is below 18 °C (64 °F), the cold start strategy is activated. The cold start strategy deactivates under any of the following conditions:

- The coolant temperature reaches 49 °C (120 °F).
- The engine has run for 20 minutes.

i08288996

Control Panel

SMCS Code: 7451

GCCP1.2 (If Equipped)

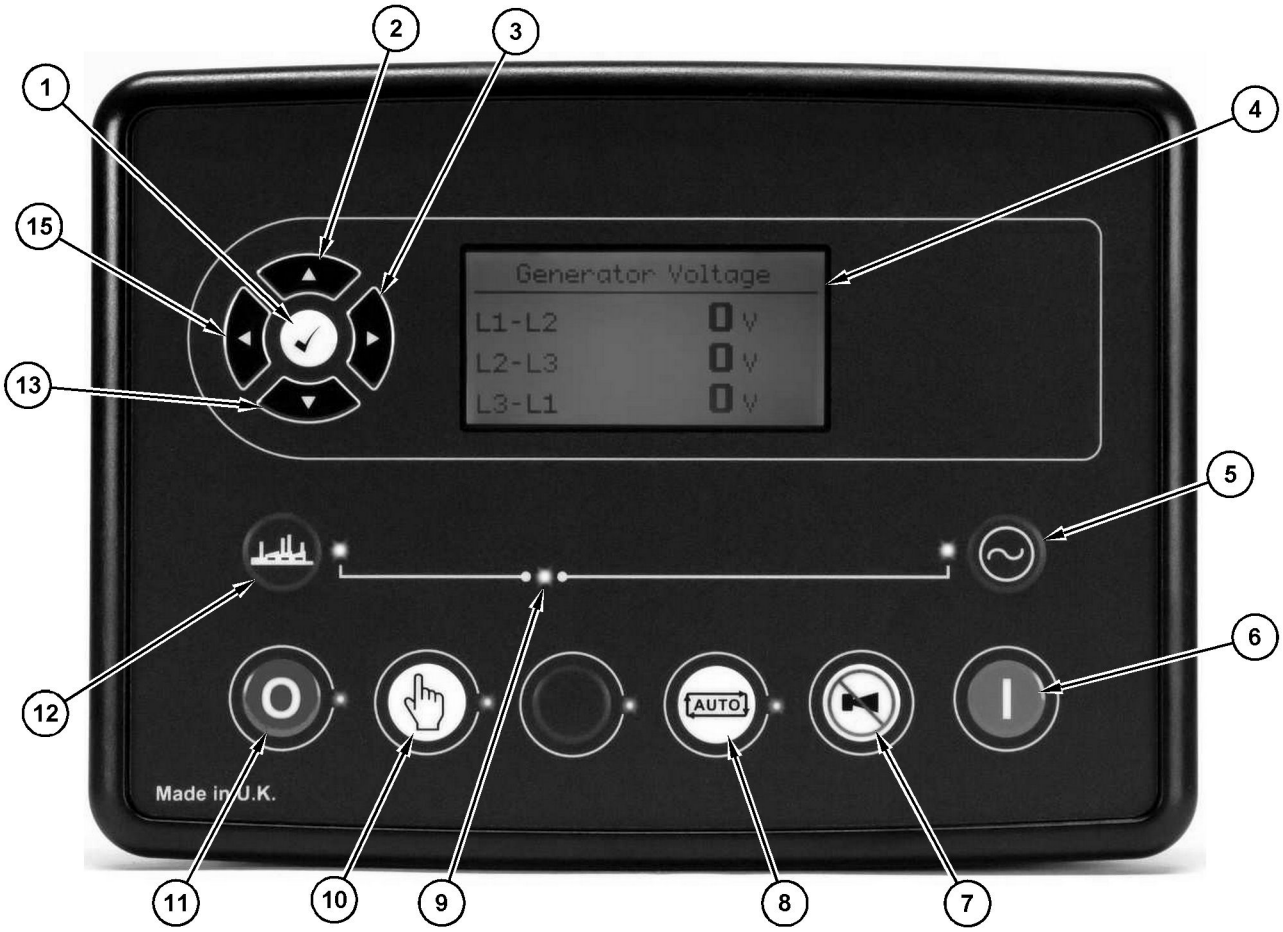

Illustration 39 g06471487

(1) OK key
(2) Up key
(3) Right key
(4) Main status and instrument display
(5) Transfer to gererator
(6) Start
(7) Mute/lamp test
(8) Auto/test key
(9) Generator breaker LED
(10) Manual key
(11) Stop/Reset
(12) Open generator key
(13) Down key
(14) Left key

Function Keys

This section provides an overview of key functions for this control. For detailed information about this control module, refer to the OEM manual.

(1) OK Key – The “OK” key is used during menu navigation to move forward (downward) through the menu/submenu structure. The key is also used during set point programming to save set points changes. Pressing the OK key during set point programming causes set point changes to be saved to memory.

(2) Up Key – The “Up” key is used to navigate up through the various menus or monitoring screens. The key is also used during set point entry. During numeric data entry, the key is used to increment the digits (0-9). If the set point requires selection from a list, then the key is used to navigate up through the list.

(3) Right Key – The “Right” key is used during set point adjustment. During numeric data entry, the key is used to choose which digit is being edited. The key is also used during certain set point adjustments to select a check box or to deselect a check box. If a box has a check mark inside, then pressing the key will cause the check mark to disappear. If the box does not have a check mark inside, then pressing the key will cause a check mark to appear inside.

(4) Main Status and Instrumentation Display – Information from the GCCP1.2 is displayed on the main status and instrumentation display. Keys (1) - (5) are used to navigate through different menu screens. For further details, see Special Instruction, M0085763, “TCP 2000 & TCP 3000 Control Panel”Description of the Controls.

(5) Transfer to Generator – Operative in manual mode only. Normal breaker key control allows the operator to transfer the load to the generator. Alternative breaker key control. If mains is on load, pressing the “Transfer to Generator” key transfers the load to the generator. If generator is on load, pressing the “Transfer to Generator” key opens the generator breaker. If generator and mains are off load, pressing the “Transfer to Generator” key closes the generator breaker.

(6) Start – The “Start” key is only active in Stop/Reset mode. Pressing the “Start” key in manual or test mode will cause the engine and run off load (manual) or on load (test). Pressing the “Start” key while in Stop/Reset mode will turn on the CAN engine ECU (when correctly configured, and fitted to a compatible engine ECU).

(7) Mute/Lamp Test – Pressing the “Mute/Lamp” test key will silence the audible alarm if it is sounding, de-activate the Audible Alarm output, and illuminate all the indicator lamps as a test feature.

(8) AUTO – Pressing the “AUTO” key causes the module to enter the auto mode. Auto mode allows the module to control the function of the generator automatically. The module will monitor numerous start requests, and once a start request is made, the set will be automatically started, and placed on load. Once the generator is available, the mains is taken off load (Close Generator Output becomes inactive if used). Upon removal of the starting signal, the module will automatically transfer the load from the generator (Close Generator Output becomes inactive if used), and shut down the set observing the stop delay timer and cooling timer as necessary. The module will then await the next start event.

(9) Generator Breaker LED – Operative in Manual mode only. Normal breaker key control allows the operator to transfer the load to the mains. Alternative breaker key control, if generator is on load, transfers the load to the mains. If mains is on load, opens the mains breaker. If generator and mains are off load, closes the mains breaker.

(10) Manual – Pressing the “Manual” key allows manual control of the generator functions. Once in manual mode, the module will respond to the “Start” key, start the engine, and run off load. If the engine is running off-load in manual mode and a remote start signal becomes present, the module will automatically instruct the changeover device to place the generator on load (Close Generator becomes active (if used)). Upon removal of the remote start signal, the generator remains on load until either selection of the stop/reset or auto modes. For further details, see Special Instruction, M0085763, “TCP 2000 & TCP 3000 Control Panel”Manual Operation.

(11) Stop/Reset – Pressing the “Stop/Reset” key causes the module to enter the Stop/Reset mode. This will clear any alarm conditions for which the triggering criteria have been removed. If the engine is running, and the module is in Stop mode, the module will automatically instruct the changeover device to unload the generator (Close Generator becomes inactive if used). The fuel supply de-energizes, and the engine comes to a standstill. Should a Remote Start Signal be present while operating in Stop/Reset mode, a remote start will not occur.

(12) Transfer to Generator – Operative in manual mode only. Normal breaker key control allows the operator to transfer the load to the generator. Alternative breaker key control. If mains is on load, pressing the “Transfer to Generator” key transfers the load to the generator. If generator is on load, pressing the “Transfer to Generator” key opens the generator breaker. If generator and mains are off load, pressing the “Transfer to Generator” key closes the generator breaker.

(13) Down Key – The “Down” key is used to navigate down through the various menus or monitoring screens. The key is also used during set point entry. During numeric data entry, the key is used to decrement the digits (0-9). If the set point requires selection from a list, then the key is used to navigate down through the list.

(14) Left Key – The “Left” key is used during set point adjustment. During numeric data entry, the key is used to choose which digit is being edited. The key is also used during certain set point adjustments to select a check box or to deselect a check box. If a box has a check mark inside, then pressing the key will cause the check mark to disappear. If the box does not have a check mark inside, then pressing the key will cause a check mark to appear inside.

GCCP1.3 (If Equipped)

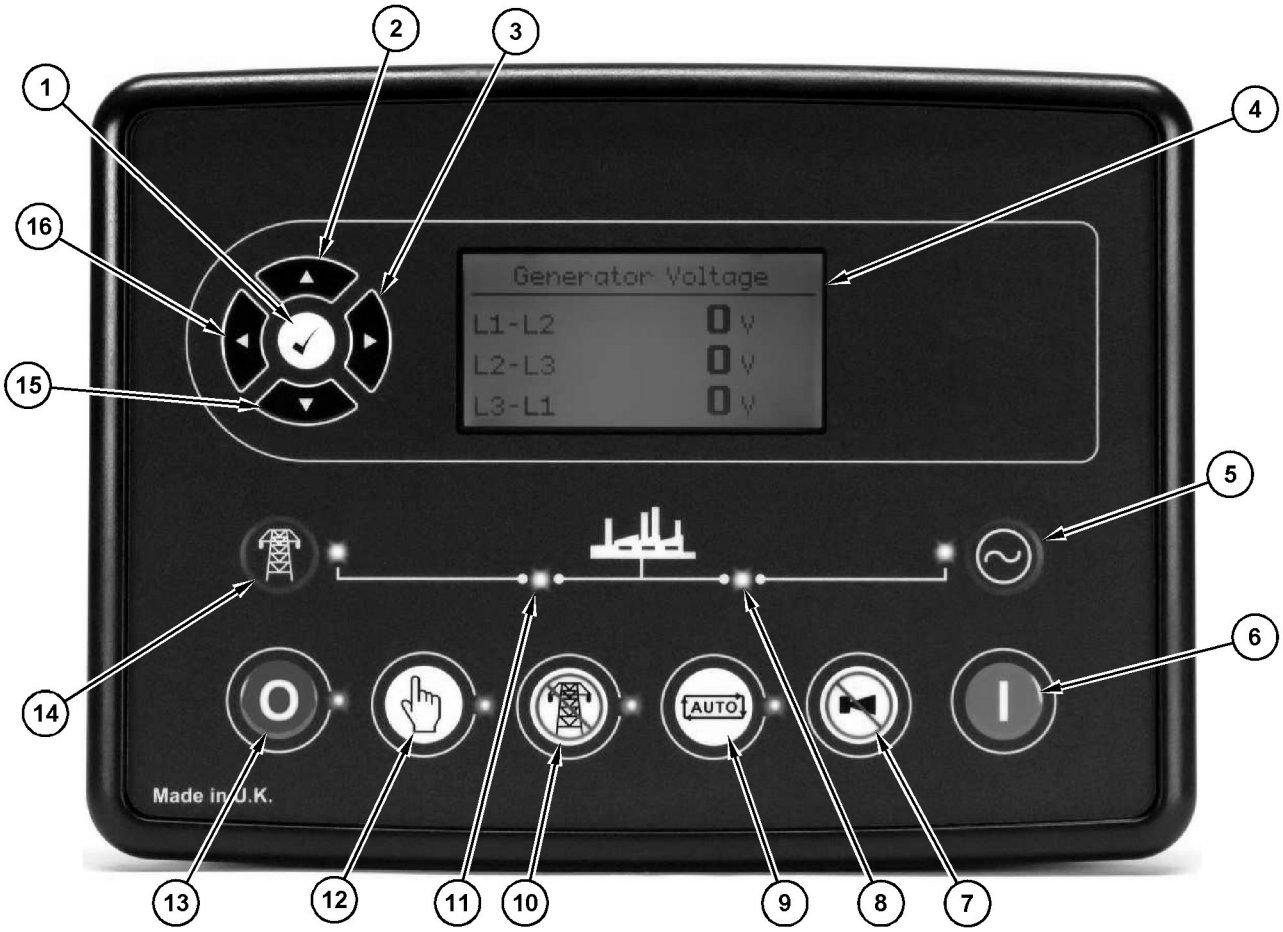

Illustration 40 g06471489

(1) OK key
(2) Up key
(3) Right key
(4) Main status and instrument display
(5) Transfer to generator
(6) Start
(7) Mute/lamp test
(8) Generator breaker LED
(9) Auto key
(10) Test mode key
(11) Mains breaker LED
(12) Manual key
(13) Stop/Reset
(14) Transfer to mains key
(15) Down key
(16) Left key

Function Keys

This section provides an overview of key functions for this control. For detailed information about this control module, refer to the OEM manual.

(1) OK Key – The “OK” key is used during menu navigation to move forward (downward) through the menu/submenu structure. The key is also used during set point programming to save set points changes. Pressing the OK key during set point programming causes set point changes to be saved to memory.

(2) Up Key – The “Up” key is used to navigate up through the various menus or monitoring screens. The key is also used during set point entry. During numeric data entry, the key is used to increment the digits (0-9). If the set point requires selection from a list, then the key is used to navigate up through the list.

(3) Right Key – The “Right” key is used during set point adjustment. During numeric data entry, the key is used to choose which digit is being edited. The key is also used during certain set point adjustments to select a check box or to deselect a check box. If a box has a check mark inside, then pressing the key will cause the check mark to disappear. If the box does not have a check mark inside, then pressing the key will cause a check mark to appear inside.

(4) Main Status and Instrumentation Display – Information from the TCP 3000 is displayed on the main status and instrumentation display. Keys (1) - (5) are used to navigate through different menu screens. For further details, see Special Instruction, M0085763, “TCP 2000 & TCP 3000 Control Panel”Description of the Controls.

(5) Transfer to Generator – Operative in manual mode only. Normal breaker key control allows the operator to transfer the load to the generator. Alternative breaker key control. If mains is on load, pressing the “Transfer to Generator” key transfers the load to the generator. If generator is on load, pressing the “Transfer to Generator” key opens the generator breaker. If generator and mains are off load, pressing the “Transfer to Generator” key closes the generator breaker.

(6) Start – The “Start” key is only active in Stop/Reset mode. Pressing the “Start” key in manual or test mode will cause the engine and run off load (manual) or on load (test). Pressing the “Start” key while in Stop/Reset mode will turn on the CAN engine ECU (when correctly configured, and fitted to a compatible engine ECU).

(7) Mute/Lamp Test – Pressing the “Mute/Lamp” test key will silence the audible alarm if it is sounding, de-activate the Audible Alarm output, and illuminate all the indicator lamps as a test feature.

(8) Generator Breaker LED – The generator breaker LED is ON when the generator is on load.

(9) AUTO – Pressing the “AUTO” key causes the module to enter the auto mode. Auto mode allows the module to control the function of the generator automatically. The module will monitor numerous start requests, and once a start request is made, the set will be automatically started, and placed on load. Once the generator is available, the mains is taken off load (Close Mains Output becomes inactive if used). Upon removal of the starting signal, the module will automatically transfer the load from the generator (Close Mains Output becomes active if used), and shut down the set observing the stop delay timer and cooling timer as necessary. The module will then await the next start event.

(10) Test Mode – Pressing the “Test Mode” key causes the module to enter the test mode. In test mode, an on load test of the generator can be performed. Once in test mode, the module will respond to the start button, start the engine, and run on load. For further details, see Special Instruction, M0085763, “TCP 2000 & TCP 3000 Control Panel”Test Operation.

(11) Mains Breaker LED – The mains breaker LED is ON when the mains is on load.

(12) Manual – Pressing the “Manual” key allows manual control of the generator functions. Once in manual mode, the module will respond to the “Start” key, start the engine, and run off load. If the engine is running off-load in manual mode and a remote start signal becomes present, the module will automatically instruct the changeover device to place the generator on load (Close Generator becomes active (if used)). Upon removal of the remote start signal, the generator remains on load until either selection of the stop/reset or auto modes. For further details, see Special Instruction, M0085763, “TCP 2000 & TCP 3000 Control Panel”Manual Operation.

(13) Stop/Reset – Pressing the “Stop/Reset” key causes the module to enter the Stop/Reset mode. This will clear any alarm conditions for which the triggering criteria have been removed. If the engine is running, and the module is in Stop mode, the module will automatically instruct the changeover device to unload the generator (Close Generator becomes inactive if used), and places the mains on load (Close Mains Output becomes active). The fuel supply de-energizes, and the engine comes to a standstill. Should a Remote Start Signal be present while operating in Stop/Reset mode, a remote start will not occur.

(14) Transfer to Mains – Operative in Manual mode only. Normal breaker key control allows the operator to transfer the load to the mains. Alternative breaker key control, if generator is on load, transfers the load to the mains. If mains is on load, opens the mains breaker. If generator and mains are off load, closes the mains breaker.

(15) Down Key – The “Down” key is used to navigate down through the various menus or monitoring screens. The key is also used during set point entry. During numeric data entry, the key is used to decrement the digits (0-9). If the set point requires selection from a list, then the key is used to navigate down through the list.

(16) Left Key – The “Left” key is used during set point adjustment. During numeric data entry, the key is used to choose which digit is being edited. The key is also used during certain set point adjustments to select a check box or to deselect a check box. If a box has a check mark inside, then pressing the key will cause the check mark to disappear. If the box does not have a check mark inside, then pressing the key will cause a check mark to appear inside.

DSE2548 Expansion Module

Illustration 41 g06472485

(1) Eight configurable LEDs
(2) Mute/lamp test

The DSE2548 output expansion module has the following features/characteristics:

- Eight configurable LEDs
- Works up to 1 km (0.6 miles) from the host controller
- 10 modules can be linked together to one host controller

ID Switch

The rotary ID switch is used to select the address of the DSE2548 expansion module, as the host control module can give instructions to several DSE2548 expansion modules at the same time.

i07911799

Overspeed

SMCS Code: 1900; 1907; 1912; 7427

Serious damage to the engine and to the driven components may result during engine overspeed. Engine overspeed protection is a safety feature that will take the necessary measures to initiate an engine shutdown in the event of an engine overspeed condition.

i07942253

Sensors and Electrical Components

SMCS Code: 1900; 7400

Sensor Locations

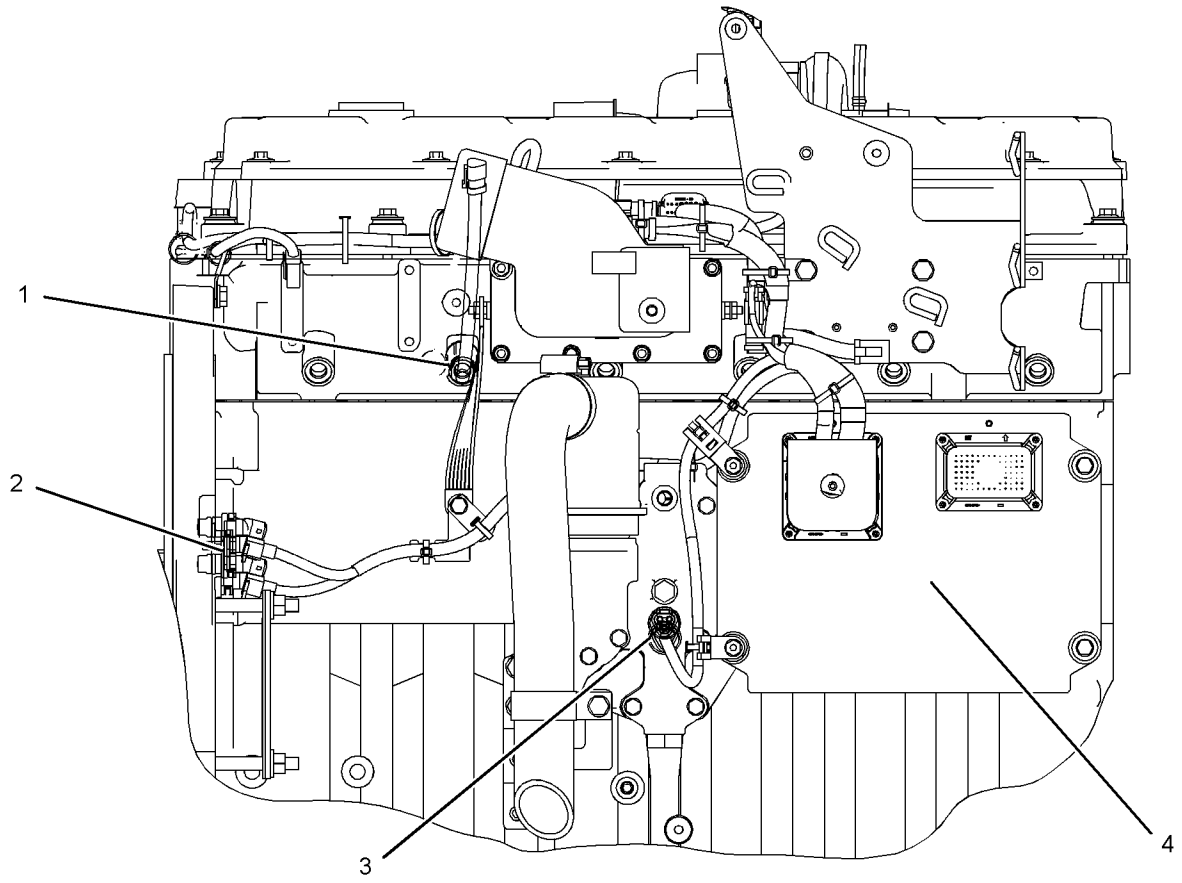

Illustration 42 g01158393

Typical example

(1) Injection actuation pressure sensor
(2) Speed/timing sensors
(3) Engine oil pressure sensor
(4) Electronic control module (ECM)

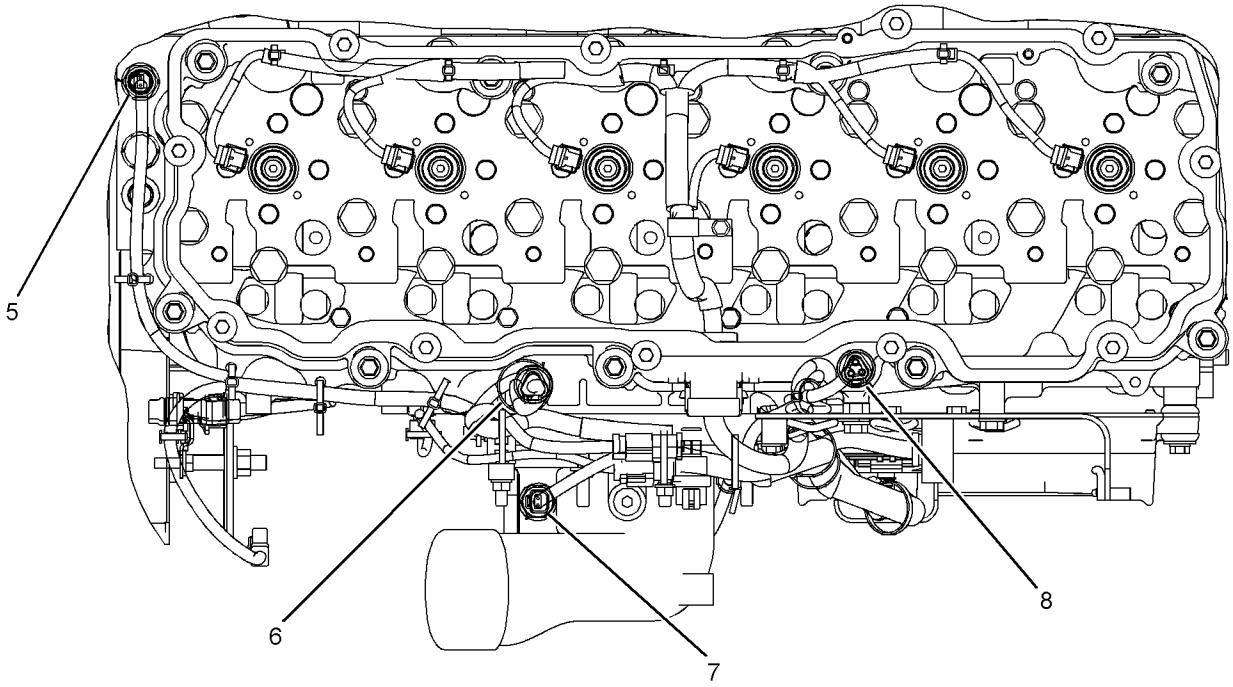

Illustration 43 g01158394

Typical example

(5) Coolant temperature sensor
(6) Turbocharger outlet pressure sensor
(7) Inlet air temperature sensor
(8) Atmospheric pressure sensor

Failure of Sensors

All Sensors

A failure of any of the sensors may be caused by one of the following malfunctions:

- Sensor output is open.
- Sensor output is shorted to “- battery” or “+ battery” .
- Measured reading of the sensor is out of specification.

Inlet Air Temperature Sensor

Inlet air temperature sensor (7) measures the temperature of the inlet air. The Electronic Control Module (ECM) monitors the signal of the inlet air temperature sensor. The output of the ECM can indicate high inlet air temperature through a relay or a lamp. The inlet air temperature sensor will not cause a shutdown of the engine or any horsepower change.

Engine Speed/Timing Sensors

If the ECM does not receive a signal from the primary speed/timing sensor, the “DIAGNOSTIC” lamp will indicate a diagnostic fault code which will be logged in the ECM memory.

If the ECM does not receive a signal from the primary speed/timing sensor, the ECM will read the signal from the secondary speed/timing sensor. The ECM continually checks to determine if there is a signal from both sensors (2). If either sensor fails, the faulty sensor should be replaced.

Intermittent failure of the sensors will cause erratic engine control.

Coolant Temperature Sensor

Coolant temperature sensor (5) monitors engine coolant temperature. This feature is used for the engine system diagnostics with an output from the ECM. The output of the ECM can indicate a high coolant temperature through a relay or a lamp.

Failure of the Coolant Temperature Sensor

The ECM will detect a failure of the coolant temperature sensor. The diagnostic lamp will warn the operator about the status of the coolant temperature sensor. Strategies that are related to the coolant temperature sensor will be disabled if a failure occurs. A failure of the coolant temperature sensor will not cause a shutdown of the engine or any horsepower change.

Engine Diagnostics

i03840813

Fault Logging

SMCS Code: 1000; 1900; 1901; 1902

The system provides the capability of Fault Logging. When the Electronic Control Module (ECM) generates an active diagnostic code, the code will be logged in the memory of the ECM. The codes that have been logged in the memory of the ECM can be retrieved with Caterpillar electronic service tools. The codes that have been logged can be cleared with Caterpillar electronic service tools. The codes that have been logged in the memory of the ECM will be automatically cleared from the memory after 100 hours. The following faults cannot be cleared from the memory of the ECM without using a factory password: overspeed, low engine oil pressure and high engine coolant temperature.

i01147116

Engine Operation with Active Diagnostic Codes

SMCS Code: 1000; 1900; 1901; 1902

Each circuit component in the engine electronics system is monitored by the Electronic Control Module (ECM) for abnormal operation. The ECM is capable of recognizing several abnormal conditions and selecting an appropriate reaction.

When an abnormal condition is recognized by the ECM, an ACTIVE Diagnostic Code is generated. The ECM will first communicate the condition to the operator. This communication may include lighting a diagnostic lamp or displaying the diagnostic condition on a display panel.

The reaction of the ECM to an ACTIVE diagnostic code will seldom affect more than engine performance. Much of the data that is received from the circuit components by the ECM is used in order to control engine function. If a component that provides this type of data has an ACTIVE diagnostic condition, the data cannot be used. If a diagnostic code becomes ACTIVE, the ECM will flag suspect data as “INVALID DATA” . A default value that has been predetermined will be used for the engine control that is associated with that component. The operation of the subsystem will continue, and the engine will continue to run. However, loss of an electronic component that causes an ACTIVE diagnostic code may cause an engine shutdown.

ACTIVE diagnostic codes can indicate problems that are as minor as a loose connection. ACTIVE diagnostic codes can also indicate larger problems that may be associated with the deterioration of a component. Any condition that causes an ACTIVE diagnostic code should be investigated immediately. If an ACTIVE diagnostic code is present during normal engine operation, the engine should be serviced immediately by a qualified technician.

i01154195

Engine Operation with Intermittent Diagnostic Codes

SMCS Code: 1000; 1900; 1901; 1902

The Electronic Control Module (ECM) is capable of detecting abnormal operation of the electronic components that are found on the engine. The ECM generates an ACTIVE diagnostic code when an abnormal condition is detected. The condition is also logged in ECM memory. The logged information that is stored in ECM memory is called a LOGGED diagnostic code. This information may be useful to the technician for troubleshooting the problem. A diagnostic code is considered to be intermittent when the condition is logged in ECM memory and the condition is not currently active.

In most cases, it is not necessary to stop the engine because of an intermittent code. However, the operator should retrieve the codes and the operator should reference the appropriate information in order to identify the nature of the event. Take note of the following characteristics of engine performance:

- Low power
- Engine rpm limits
- Excessive smoke, etc

This information can be useful to help troubleshoot the situation. If the nature of the problem persists, a qualified service technician should be consulted. For more information on diagnostic codes, refer to the Troubleshooting Guide for this engine.

i04041713

Configuration Parameters

SMCS Code: 1000; 1900; 1901; 1902

System configuration parameters are parameters that are configured to specify the engine emissions levels, the power rating, and the specific application. Default values for the parameters are programmed at the factory. Some parameters may be changed in order to equip the engine for a specific application. The system configuration parameters must be reprogrammed if the Electronic Control Module (ECM) is replaced. It is not necessary to reprogram the system configuration parameters if you update the ECM flash file. Certain configuration parameters are stamped into the engine information plate.

Note: If the parameters that are protected with the factory passwords are changed, the Caterpillar warranty may be voided.

Parameter Descriptions

Rating Number

The rating number corresponds to the selected set of performance maps that has been selected for this application. There may be more than one set of performance maps that are available for this engine. All of the maps are resident in the flash file for the engine.

Refer to this Operation and Maintenance Manual, “Engine Rating Definitions” for more information about engine ratings.

Rated Frequency

The line frequency of the generator set

Rated Engine Speed

The optimum speed of the engine

Rated Real Genset Power

The output power of the generator set in kilowatts

Rated Apparent Genset Power

The kVA rating of the generator set

Rating Configuration

The performance maps in the software

Test Spec

This is the engine's “Test Specifiction Number” . Use this number to retrieve data that is related to the engine specifications from the Technical Marketing Information System (TMI). The following information can be retrieved from TMI:

- “As shipped consists”
- “Engine test specifications”
- “Systems data”
- “Physical data”
- “Gasket kit data”
- “Reman parts”
- “Performance data”

A link to TMI Web can be found on the web site for the Service Information System (SIS).

Equipment ID

This parameter allows the customer to enter a description into the ECM in order to identify the engine application. A maximum of 17 characters can be entered in the field.

Engine Serial Number

The engine serial number must be programmed to match the engine serial number that is stamped on the engine information plate. The engine serial number is not preprogrammed into a replacement ECM.

ECM Serial Number

The serial number of the ECM that is stored in the ECM memory

Software Group Part Number

The part number of the flash file that is currently installed in the ECM

Software Group Release Date

The release date of the flash file that is currently installed in the ECM

Software Group Description

The description of the application for the flash file that is currently installed in the ECM

Total Tattletale

The total tattletale counts the number of changes to system parameters.

Engine Acceleration Rate

This parameter defines the acceleration rate of the engine in rpm per second.

Low Idle Speed

This parameter defines the low idle rpm of the engine.

Engine Speed Droop

This parameter enables the engine to be operated in a load sharing system.

Droop/Isochronous Switch Enable

This parameter defines the installation status of a switch that is used to select the droop or the isochronous mode.

Droop Mode Selection

This parameter allows the customer to select the droop or the isochronous mode.

Ether Control

This parameter defines the installation status of an ether starting aid for the engine.

Air Inlet Heater

This parameter defines the installation status of an air inlet heater for the engine.

Engine Oil Temperature Sensor Installation Status

This parameter defines the installation status of an engine oil temperature sensor.

Desired Speed Input Configuration

This parameter defines the type of input for the primary throttle.

Secondary Desired Speed Input Configuration

This parameter defines the type of input for the secondary throttle.

Fuel Enable Input Configuration

This parameter allows the selection for the type of input that is used to enable the fuel for the engine.

Secondary Fuel Enable Input Configuration

This parameter sets the installation status of a secondary switch that can be used to enable the fuel for the engine.

Fuel Filter Differential Pressure Switch Configuration

This parameter sets the installation status of a fuel filter differential pressure switch for the engine.

Emergency Shutdown Override Switch Installation Status

This parameter sets the installation status of an engine shutdown override switch.

Emergency Shutdown Override Switch Configuration

This parameter sets the configuration of an engine shutdown override switch.

FLS

“FLS” is a parameter that represents the fuel system adjustment that was made at the factory in order to fine-tune the fuel system to the engine. The correct value for this parameter is stamped on the engine information plate. Only change this value if the engine is rerated or if a new ECM has been installed. Factory passwords are required to change this parameter.

FTS

“FTS” is another parameter that represents a fuel system adjustment that was performed at the factory in order to fine-tune the fuel system to this engine. Only change this value if the engine is rerated or if a new ECM has been installed. Factory passwords are required to change this parameter.

Governor Gain Factor

This parameter is used in determining the engine rate of response to an engine load.

Governor Minimum Stability Factor

This parameter is used by the ECM to offset the steady state speed error when the steady state speed error is less than 20 rpm.

Governor Maximum Stability Factor

This parameter is used by the ECM to offset the steady state speed error when the steady state speed error is greater than 20 rpm.

Crank Terminate Speed

This parameter is used to define the desired engine speed during engine cranking.

Digital Speed Control Min Speed

This parameter is used to configure the engine speed below the rated speed of the engine.

Digital Speed Control Max Speed

This parameter is used to configure the engine speed above the rated speed of the engine.

Parameter Table

Table 5

System Configuration Parameters			
Parameter	**Available Range or Options**	**Default**	**Required Password**
Selected Engine Ratings			
Rating Number	**Software Dependent**		**None**
Rated Frequency	**Software Dependent**		**Read Only(1)**
Rated Engine Speed	Software Dependent		Read Only(1)
Rated Real Genset Power	Kilowatts (if applicable)	Rated power	Read Only(1)
Rated Apparent Genset Power	Kilowatts (if applicable)	Rated power	Read Only(1)
Rating Configuration	Software Dependent		Read Only(1)
Test Spec	Software Dependent		Read Only(1)
ECM Identification Parameters			
Equipment ID	17 alphanumeric characters	Blank	Customer
Engine Serial Number	0XX00000 or XXX00000	Blank	Factory
ECM Serial Number	Hardware Dependent	**Blank**	**Read Only(1)**
Software Group Part Number	Software Dependent		Read Only(1)
Software Group Release Date	Software Dependent		Read Only(1)
Software Group Description	Software Dependent		Read Only(1)
Security Access Parameters			
Total Tattletale	0 to 65535	0	Read Only(1)
Engine/Gear Parameters			
Engine Acceleration Rate	5 - 2000 rpm/sec	500	Customer
Low Idle Speed	600 to 1200 rpm	1100	Customer
Engine Speed Droop	0.0 - 8.0 %	3.0 %	Customer
Droop/Isochronous Switch Enable	Enabled or Disabled	Enabled	Customer
Droop mode selection	Droop or Isochronous	Isochronous	Customer

(continued)

(Table 5, contd)

System Configuration Parameters			
Parameter	**Available Range or Options**	**Default**	**Required Password**
I/O Configuration Parameters			
Ether Control	Installed or Uninstalled	Installed	Customer
Air Inlet Heater	Installed or Uninstalled	Installed	Customer
Engine Oil Temperature Sensor Installation Status	Installed or Uninstalled	Uninstalled	Customer
Desired Speed Input Configuration	PWM CAN Input 0 - 5 VDC	CAN Input	Customer
Secondary Desired Speed Input Configuration	PWM CAN Input 0 - 5 VDC Unistalled	CAN Input	Customer
Fuel Enable Input Configuration	Switch J1939	Switch	Customer
Secondary Fuel Enable Input Configuration	Enabled or Disabled	Enabled	Customer
Fuel Filter Differential Pressure Switch Configuration	Uninstalled Normally Open Normally Closed	Uninstalled	Customer
Emergency Shutdown Override Switch Installation Status	Installed or Uninstalled	Uninstalled	Customer
Emergency Shutdown Override Switch Configuration	Switch to Ground CAN Input	Switch to Ground	Customer
System Parameters			
FLS	Programmed at the Factory		Factory
FTS	Programmed at the Factory		Factory
Governor Gain Factor	0 - 65,535	26,214	Customer
Governor Minumum Stability Factor	0 - 65,535	1049	Customer
Governor Maximum Stability Factor	0 - 65,535	2097	Customer
Crank Terminate Speed	200 to 700 rpm	400	Customer
Digital Speed Control Min Speed	0 to 150 rpm	125	Customer
Digital Speed Control Max Speed	0 to 150 rpm	125	Customer

(1) This parameter can be viewed only. No changes are allowed.

Parameter Worksheet

Table 6

Parameter Worksheet	
Engine Parameters	
Equipment ID	
Engine Serial Number	
ECM Serial Number	
Software Group Part Number	
Software Group Release Date	
Software Group Description	
FLS	
FTS	
Total Tattletale	
Engine Acceleration Rate	
Low Idle Speed	
Engine Speed Droop	
Droop/Isochronous Switch Enable	
Droop mode selection	
Ether Control	
Air Inlet Heater	
Engine Oil Temperature Sensor Installation Status	
Desired Speed Input Configuration	
Secondary Desired Speed Input Configuration	
Fuel Enable Input Configuration	
Secondary Fuel Enable Input Configuration	
Fuel Filter Differential Pressure Switch Configuration	
Emergency Shutdown Override Switch Installation Status	
Emergency Shutdown Override Switch Configuration	
Governor Gain Factor	
Governor Minumum Stability Factor	
Governor Maximum Stability Factor	
Crank Terminate Speed	
Digital Speed Control Min Speed	
Digital Speed Control Max Speed	
Injector Serial Numbers	
Cylinder 1	

(continued)

(Table 6, contd)

Parameter Worksheet	
Cylinder 2	
Cylinder 3	
Cylinder 4	
Cylinder 5	
Cylinder 6	
Information from the Engine Information Plate	
Engine Serial Number	
FLS	
FTS	

Note: Compare the FLS and the FTS from the ECM with the values that are listed on the engine information plate. Use of incorrect parameters could cause damage to the engine. The use of the wrong parameters may also void the Caterpillar warranty or the emission certification for the engine.

Engine Starting

i02354640

Before Starting Engine

SMCS Code: 1000; 1400; 1450

Perform the required daily maintenance and other periodic maintenance before the engine is started. Inspect the engine compartment. This inspection can help prevent major repairs at a later date.

- For the maximum service life of the engine, make a thorough inspection before starting the engine. Look for the following items: oil leaks, coolant leaks, loose bolts and trash buildup. Remove trash buildup and arrange for repairs, as needed.
- Inspect the cooling system hoses for cracks and for loose clamps.
- Inspect the alternator and accessory drive belts for cracks, breaks, and other damage.
- Inspect the wiring for loose connections and for worn wires or frayed wires.
- Check the fuel supply. Drain water from the water separator (if equipped). Open the fuel supply valve.

NOTICE
All valves in the fuel return line must be open before and during engine operation to help prevent high fuel pressure. High fuel pressure may cause filter housing failure or other damage.

If the engine has not been run for several weeks, fuel may have drained from the fuel system. Air may have entered the filter housing. Also, when fuel filters have been changed, some air space will be left in the housing. In these instances, prime the fuel system. Refer to the Operation and Maintenance Manual, “Fuel System - Prime” for more information on priming the fuel system.

WARNING

Engine exhaust contains products of combustion which may be harmful to your health. Always start and operate the engine in a well ventilated area and, if in an enclosed area, vent the exhaust to the outside.

- Do not start the engine or move any of the controls if there is a “DO NOT OPERATE” warning tag or similar warning tag attached to the start switch or to the controls.
- Ensure that the areas around the rotating parts are clear.
- All of the guards must be put in place. Check for damaged guards or for missing guards. Repair any damaged guards. Replace damaged guards and/or missing guards.
- Disconnect any battery chargers that are not protected against the high current drain that is created when the electric starting motor (if equipped) is engaged. Check electrical cables and check the battery for poor connections and for corrosion.
- Reset any of the shutoff components or alarm components.
- Check the engine lubrication oil level. Maintain the oil level between the “ADD” mark and the “FULL” mark on the oil level gauge.
- Check the coolant level. Maintain the coolant level within 13 mm (0.5 inch) of the bottom of the filler pipe. If the engine is equipped with a sight glass, maintain the coolant level in the sight glass.
- Observe the air cleaner service indicator. Service the air cleaner when the red target locks in the visible position.
- Disengage any driven equipment. Remove any electrical loads.

i05848852

Cold Weather Starting

SMCS Code: 1000; 1250; 1450; 1453; 1456; 1900

Note: Oil pan immersion heaters are not recommended for heating the engine oil. To ensure the compatibility of the components, only use equipment that is recommended by Caterpillar.

Startability will be improved at temperatures below 16 °C (60 °F) with a starting aid. A jacket water heater may be needed and/or the crankcase oil may need warmed.

A jacket water heater is available as an option for starting in temperatures as low as 0 °C (32 °F). The jacket water heater can maintain the water temperature at approximately 32 °C (90 °F). The heated water will help to keep the oil in the engine block warm enough to flow when the engine is started.

Maintain the proper level of electrolyte in the batteries. Keep the batteries fully charged.

To maximize the battery power, heat the battery compartment or store the batteries in a warm location. Typically, batteries only have 50 percent of the capability at −10 °C (14 °F) versus 27 °C (80 °F).

Extra battery capacity may be necessary for cold temperatures.

When No. 2 diesel fuel is used, a fuel heater will maintain the temperature of the fuel above the cloud point. Fuel line insulation will help to maintain the fuel temperature.

Consult your Caterpillar dealer for more information on the starting aids that are available for cold weather starting.

Starting With the Starting Aid Switch (If Equipped)

WARNING

Personal injury or property damage can result from alcohol or starting fluids.

Alcohol or starting fluids are highly flammable and toxic and if improperly stored could result in injury or property damage.

NOTICE

Excessive starting fluid can cause piston and ring damage.

Use starting fluid for cold starting purposes only.

Do not use excessive starting fluid during starting or after the engine is running.

The optional ether starting aid which is located on the control panel is the only system that is recommended for the injection of starting fluid.

1. Perform the procedures that are described in this Operation and Maintenance Manual, “Before Starting Engine”.
2. Press the “RUN” key.
3. Ether will automatically be injected if the following conditions are met:
   a. The Starting Aid switch is in the AUTOMATIC position.
   b. The jacket water coolant temperature is less than 0 °C (32 °F).
4. Additional injections may be necessary in order to start the engine. Additional injections may also be necessary in order to achieve low idle. If additional injections are necessary, toggle the Starting Aid switch to the MANUAL position. For additional injections, the jacket water coolant temperature must be less than 10 °C (50 °F).

Note: The Starting Aid switch is a momentary switch. To stop the injection, release the Starting Aid switch.

i07911112

Starting the Engine (DSE6310 and DSE6320 Control Modules)

SMCS Code: 1000; 1450

Note: The following descriptions detail the sequences followed by a module containing the standard factory configuration. Always refer to your configuration sour for the exact sequences and timers observed by any particular module in the field.

This section provides a quick start guide to the operation of the module. For further details, see OEM manual.

Illustration 44 g06476771

(1) Manual mode button (2) Start button

1. Press the “Manual Mode” button.

2. Press the “Start” button.

Note: If a digital input configured to “Panel Lock” is active, changing module modes is not possible. Viewing the instruments and event logs is not affected by “Panel Lock” .

For further details about module configuration, refer to For further details, see OEM manual.

WARNING

Engine exhaust contains products of combustion which may be harmful to your health. Always start and operate the engine in a well ventilated area and, if in an enclosed area, vent the exhaust to the outside.

WARNING

When the engine is in the AUTOMATIC mode, the engine can start at any moment. To avoid personal injury, always remain clear of the the engine when the engine is in the AUTOMATIC mode.

Before manually starting the engine, perform all of the procedures that are described in this Operation and Maintenance Manual, “Before Starting Engine”. Ensure that no one will be endangered before the engine is started and when the engine is started.

NOTICE

Do not engage the starting motor when flywheel is turning. Do not start the engine under load.

If the engine fails to start within 30 seconds, release the starter switch or button and wait two minutes to allow the starting motor to cool before attempting to start the engine again.

NOTICE
For initial start-up of a new or rebuilt engine, and for start-up of an engine that has been serviced, make provision to shut the engine off should an overspeed occur. This may be accomplished by shutting off the air and/or fuel supply to the engine.

i03640789

Starting with Jump Start Cables

SMCS Code: 1000; 1401; 1402; 1900

WARNING

Improper jump start cable connections can cause an explosion resulting in personal injury.

Prevent sparks near the batteries. Sparks could cause vapors to explode. Do not allow jump start cable ends to contact each other or the engine.

If the installation is not equipped with a backup battery system, it may be necessary to start the engine from an external electrical source.

For information on troubleshooting the charging system, refer to Special Instruction, REHS0354, “Charging System Troubleshooting”.

Many batteries which are considered unusable are still rechargeable. After jump starting, the alternator may not be able to fully recharge batteries that are severely discharged. The batteries must be charged to the proper voltage with a battery charger. For information on testing and charging, refer to the Special Instruction, SEHS7633, “Battery Test Procedure”.

NOTICE
Use a battery that is sourced with the same voltage as the electric starting motor. Use ONLY equal voltage for jump starting. The use of higher voltage will damage the electrical system.

Do not reverse the battery cables. The alternator can be damaged. Attach the negative battery cable last and remove the negative battery cable first.

When an external electrical source is used to start the engine, turn the control switch on the generator set to the “OFF” position. Turn all electrical accessories OFF before attaching the jump start cables.

Ensure that the main power switch is in the OFF position before jump start cables are attached to the engine that is being started.

1. Turn the start switch on the stalled engine to the OFF position. Turn off all accessories.
2. Connect one positive end of the jump start cable to the positive cable terminal of the discharged battery. Connect the other positive end of the jump start cable to the positive cable terminal of the charging or starting source.
3. Connect one negative end of the jump start cable to the negative cable terminal of the charging or starting source. Connect the other negative end of the jump start cable to the stalled engine block or to the chassis ground. This procedure helps to prevent potential sparks from igniting combustible gases that are produced by some batteries.
4. Charge the batteries. The engine will not continue to run after starting if the batteries have not been charged.
5. Start the engine.
6. Immediately after the stalled engine is started, disconnect the jump start cables in reverse order.

Refer to the Electrical Schematic for your engine. Consult your Caterpillar dealer for more information.

i02369353

After Starting Engine

SMCS Code: 1000

After the engine has been installed or rebuilt, carefully monitor the engine in order to detect any unusual engine performance.

Warm-up

1. Operate the engine at low idle for two to three minutes. Allow the jacket water coolant temperature to begin to rise before increasing the engine rpm to rated rpm.

Note: More warm-up time may be necessary when the ambient temperature is below −18 °C (0 °F).

2. Check all of the indicators during the warm-up period.
3. Make another walk-around inspection. Inspect the engine for fluid leaks and air leaks.

The time that is needed for the engine to reach the normal mode of operation is usually less than the time that is needed for a walk-around inspection.

The engine will reach normal operating temperature faster when the engine is operated at rated rpm and low power demand. This procedure is more effective than idling the engine with no load. The engine should reach normal operating temperature in a few minutes.

Engaging the Generator

1. Ensure that the indicators are in the normal ranges for the engine rpm.
2. Increase the engine rpm to rated rpm. Always increase the engine speed to rated rpm before applying the load.
3. Adjust the voltage and the frequency, if necessary.
4. Close the main circuit breaker in order to apply the load.
5. Continue to check the indicators and the generator.

Engine Operation

i09640976

Engine Operation
(Hydrocarbon Mitigation)

SMCS Code: 1000

Proper operation and maintenance are key factors in obtaining the maximum life and economy of the engine. If the directions in the Operation and Maintenance Manual are followed, costs can be minimized and engine service life can be maximized.

The time that is needed for the engine to reach normal operating temperature can be less than the time taken for a walk-around inspection of the engine.

The engine can be operated at the rated rpm after the engine is started and after the engine reaches operating temperature. The engine will reach normal operating temperature sooner during a low engine speed (rpm) and during a low-power demand. This procedure is more effective than idling the engine at no load. The engine should reach operating temperature in a few minutes.

Gauge readings should be observed and the data should be recorded frequently while the engine is operating. Comparing the data over time will help to determine normal readings for each gauge. Comparing data over time will also help detect abnormal operating developments. Significant changes in the readings should be investigated.

Hydrocarbon Mitigation

The hydrocarbon mitigation is a feature to protect the DOC against temperatures below 325° C (617° F). Temperatures below this range can damage the aftertreatment of the machine. The initial occurrence displays as a warning and then if temperatures do not increase by the operator or strategy, the machine will go into shutdown. Messages appear sequentially as follows:

- First : Key cycle to warning
- Secondary : Warning to shut down

If the warning messages are not acknowledged, then the shutdown counter begins. Once the engine has shutdown for low exhaust temperatures, the 173-18 Engine Exhaust Manifold #1 Temperature #1: Low - Moderate Severity (2) will return until the engine has successfully reached target temperatures.

Once exhaust temperatures below 325° C (617° F) are observed for an hour, the Hydrocarbon Mitigation feature begins and the following conditions below become active.

Cylinder Cutout Strategy

The cylinder cutout starts at 1000 rpm. The hydrocarbon mitigation monitors the exhaust and intake target temperatures and increases speed if temperatures are not achieved in intervals. The intervals are 20 minutes and with 200 rpm increments. The speed range for the strategy is 1000 rpm to 1800 rpm with a minimum run time of 100 minutes.

Note: This strategy only runs in non-work mode.

The strategy success criteria is based on the following:

- Intake air manifold temperature over 10° C (50° F)
- Exhaust manifold temperature over 325° C (617° F)

If successful, the machine will continue to run indefinitely at the current rpm until taken out of non-work mode.

Exhaust Temperature Low Code Actions

Once the 173-18 Engine Exhaust Manifold #1 Temperature #1: Low - Moderate Severity (2) warning message is shown, there are two actions the can be taken to remove them:

Non-Work Mode

Put the machine in Non-Work mode.

- This will allow Hydrocarbon Mitigation to start automatically and attempt to achieve the target temperatures for the intake and exhaust.
- If the strategy does not achieve target temperatures, the engine will return to low idle for 60 minutes and then Hydrocarbon Mitigation begins.
- If the strategy continues to fail, the next action will need to be taken to clear the codes.

Non-Work Mode Failure

If the machine is being used at the time of the warning message and cannot be put into Non-Work mode, then raise the intake and exhaust temperature for their time thresholds.

- Intake air manifold temperature is greater than 10° C (50° F) for 10 minutes continuously
- Exhaust manifold temperature is greater than 325° C (617° F) for 30 minutes continuously
- Blender - Ideal time to perform this is during the 60 minute low time after a Hydrocarbon Mitigation failure.

Note: Hydrocarbon Mitigation will always start mitigation.

Partial Load Operation

Extended operation at reduced load (less than 30%) may cause increased oil consumption and carbon buildup in the cylinders. Extended operation at reduced load may also cause fuel to slobber through the exhaust system. A loss of power and/or poor performance may result.

To maintain engine efficiency and performance, apply 70% load to the engine on an hourly basis. Operating the engine at a load level that is greater than 30% will also maintain engine efficiency and performance. This action will burn excess carbon from the cylinders.

i04289968

Fuel Conservation Practices

SMCS Code: 1000; 1250

The efficiency of the engine can affect the fuel economy. The design and technology used byCaterpillar in manufacturing provides maximum fuel efficiency in all applications. Follow the recommended procedures in order to attain optimum performance for the life of the engine.

- Avoid spilling fuel.

Fuel expands when the fuel is warmed up. The fuel may overflow from the fuel tank. Inspect fuel lines for leaks. Repair the fuel lines, as needed.

- Be aware of the properties of the different fuels. Use only the recommended fuels.
- Avoid unnecessary operation at no load.

Shut off the engine instead of operating the engine at no load for long periods of time.

- Observe the service indicator for the air cleaner frequently, if equipped. Keep the air cleaner elements clean.
- Do not remove the cover for the air cleaner unless the air filter service indicator indicates the need for cleaning of the filter.
- Maintain a good electrical system.

One bad battery cell will overwork the alternator. This will consume excess power and excess fuel.

- Ensure that the belts are properly adjusted. The belts should be in good condition.
- Ensure that all of the connections of the hoses are tight. The connections should not leak.
- Ensure that the driven equipment is in good working order.
- Cold engines consume excess fuel. Keep cooling system components clean and keep cooling system components in good repair. Never operate the engine without water temperature regulators. All of these items will help maintain operating temperatures.
- Settings for the fuel system and the limits for the operating altitude are stamped on the Engine Information Plate. If an engine is moved to a higher altitude, the settings must be changed by a Cat dealer. Changing the settings will help to provide the maximum efficiency for the engine. Engines can be operated safely at higher altitudes, but the engines will deliver less horsepower. The fuel settings should be changed by a Cat dealer in order to obtain the rated horsepower.

Generator Operation

i08705938

Generator Operation

SMCS Code: 4450

Loading of the Generator

When a generator is installed or reconnected, be sure that the total current in one phase does not exceed the nameplate rating. Each phase should carry the same load. This allows the engine to work at the rated capacity. An electrical unbalance can result in an electrical overload and overheating if one-phase current exceeds the nameplate amperage.

Allowable combinations of unbalanced loads are shown in Illustration 45 . When you operate with significant single-phase loads, the combinations of single-phase load and three-phase load may be used. Such combinations should be located below the line on the graph.

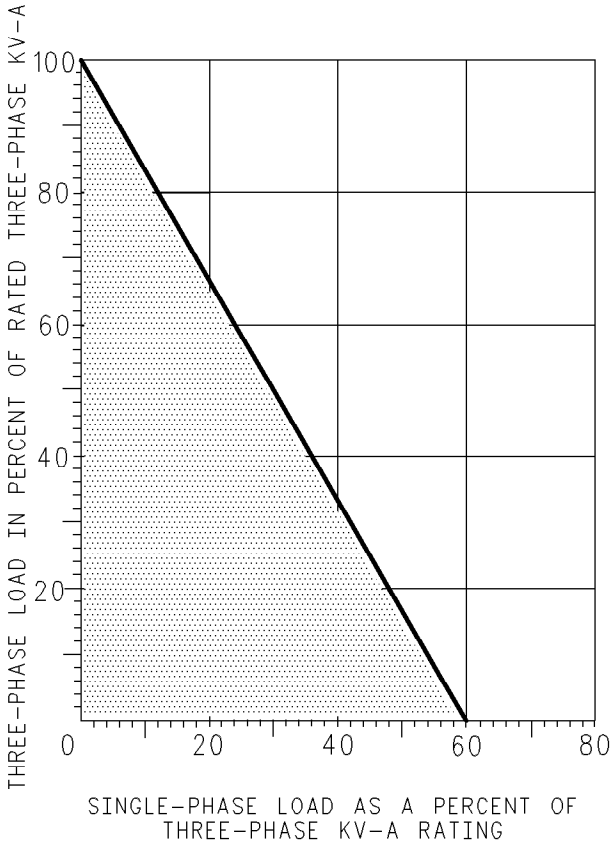

Illustration 45 g00627416
Allowable combinations of unbalanced loads

Block Loading

When an electrical load is applied to a generator set, block loading occurs. This load may be anywhere from a moderate percentage of the rated load up to the rated load.

The block loading capability of a generator set depends on the following factors:

- Engine transient response
- Voltage regulator response
- Type of the voltage regulator
- Altitude of operation of the generator set
- Type of load
- The amount of load that is already present

If a block load derating is required, refer to ISO 8528 Standards or SAE J1349 Standards. Also, reference Engine Data Sheet, LEKX4066, “Loading Transient Response” and Engine Data Sheet, LEKX4067, “Block and Transient Response”.

Power Factor

Power factor (PF) determines the relationship between true power and apparent power. The true power is also known as the active power. The apparent power is also called kVA. The true power (kW) is the work that is done on the load by the engine. The true power determines the amount of power that is available for the load to do work. The apparent power (kVA) is the total power that is produced by the generator. Power factor can be calculated by using the following formula.

PF = kW / kVA,

kW – kilowatts

kVA – Kilo-Volt-Ampere

KVAR stands for Kilo-Volt-Ampere-Reactive, which is the unit of measurement for reactive power.

Note: The generator does NOT control power factor. Power factor is determined by the load.

In most applications, electric motors, solid-state controls, and transformers determine the power factor of the system. Induction motors usually have a power factor that is no larger than 0.8.Incandescent lighting is a resistive load of about 1.0 power factor, or unity. Solid-state controls, variable frequency drivers (VFD), variable speed drivers (VSD), and systems for the UPS can operate at any power factor, leading or lagging. In this case, the power factor can be between 0.4 and 1.0.

The power factor of a system may be determined by a power factor meter or by calculations. Determine the power requirement in kW by multiplying the power factor by the kVA that is supplied to the system. As the power factor increases, the total current that is supplied to a constant power demand will decrease. With equal loads, a lower power factor will draw more current. A high-power factor will result in full engine load that is less than the generator's rated amperage. A lower power factor increases the possibility of overloading the generator.

Note: Normally, Cat ® generators are designed for a power factor of 0.8 lagging. Consult your Cat ® dealer to check the generator rating if the operation at less than 0.7 lagging power factor or operation at a leading power factor of 0.8 is desired.

Excitation Systems

Refer to the “Voltage Regulators“ for information on excitation systems.

Low Idle Adjustment

The low idle is typically 1100 rpm. This is set at the factory and should and can only be adjusted by your Cat ® dealer if, adjustment is required.

Note: Operating the electric set at low idle speed for an extended time will cause some voltage regulators to shut off. The electric set must be completely shut down. Then, the electric set must be restarted. This will allow the voltage regulator to again produce an output.

Standby Generator Sets

Most standby units are automatic. Without an operator in attendance, standby units will perform the following functions: start, pick up the load, run, and stop.

Standby units will not change the governor speed control or voltage level settings automatically. The governor speed and voltage level must be preset for the proper operation of that unit. Whenever the set is operated manually, ensure that the governor speed and the voltage level settings are set correctly for automatic operation. Check all switches for the proper setting. The Engine Control Switch should be in the AUTOMATIC position. Emergency Stop Switches should be in RUN position.

Generator Options

Space Heaters

Most of the generators are provided with space heaters. These space heaters are installed for operation in all climates. For more information on space heaters, refer to “Space Heater - Test“.

Embedded Temperature Detectors

Some generators are available with embedded temperature detectors. The detectors are installed in the slots of the main armature. The main armature is also called a stator. The detectors are used with the equipment that is provided by the customer. Thus, the temperature of the main armature winding can be measured or monitored. RTD temperature detectors are available. Contact your Cat ® dealer for more information.

Bearing Temperature Detectors

Bearing temperature detectors are available on large-frame generators. Bearing temperature detectors measure the main bearing temperature. Thus, the temperature of the bearing can be measured or monitored. Bearing temperature measurements may help to prevent premature bearing failure. Bearing temperature detectors are used with customer provided equipment. Contact your Cat ® dealer for more information.

i07911802

Single Unit Operation

SMCS Code: 4450

Initial Start-Up

Measure the insulation resistance of each winding if the generator was exposed to the following conditions:

- Rapid changes in temperature
- Freezing
- Wet climate during shipment
- Wet climate during storage

Refer to this Operation and Maintenance Manual, “Insulation - Test”.

Note: These tests should be conducted prior to any power connections or control connections that are being made.

Starting

1. Make all preliminary engine starting checks.

2. Be sure that the main circuit breaker or the line circuit breaker is open.

3. Start the engine. Allow the engine to warm up.

4. Adjust to the full load engine speed.

5. Close the main circuit breaker.

6. Apply the load. Do not try to apply the full load. Apply the load in increments to maintain system frequency at a constant level.

7. Readjust the governor for rated frequency.

Adjust the Voltage

Use the following procedure to adjust the voltage and frequency of the generator output.

1. From the “MAIN MENU” , use the down navigation key (15) or the up navigation key (12) to navigate to the “CONTROL” menu.

a. Press the “OK” key (14) to select the “CONTROL” menu. “VOLT/HZ CONTROL” will be displayed.

Note: The voltage can be controlled from the control module over CAN data link, discrete outputs, or analog outputs. The speed can only be controlled if there is an ADEM on the engine.

b. Press the “OK” key (14).

c. Press the up navigation key (12) to increase the voltage and press the down navigation key (15) to decrease the voltage.

Note: When adjusting the voltage using the navigation keys, an offset is applied to the set point value for “GENERATOR NOMINAL OUTPUT VOLTAGE” . The set point is transmitted over the Primary CAN data link to the voltage regulator and is retained until battery power is cycled to the control module. Cycling the battery power to the control module will remove the offset. Once the offset is removed, the transmitted value reverts to the set point value for “GENERATOR NOMINAL OUTPUT VOLTAGE” .

d. Press the left navigation key (16) to decrease the engine speed. Press the right navigation key (13) to increase the engine speed.

Note: When the left and right navigation keys are used to adjust the frequency, an offset is applied to the set point value for “GENERATOR NOMINAL OUTPUT FREQUENCY” . This data is transmitted over the Primary CAN data link to the engine controller and is retained until battery power is cycled to the control module. Cycling the battery power to the control module will remove the offset. Once the offset is removed, the transmitted value reverts to the set point value for “GENERATOR NOMINAL OUTPUT FREQUENCY” .

Note: Unlike the setpoints or preferences, for instance contrast, any changes to this screen takes effect immediately. The “OK” key and escape key will not save or cancel changes.

Stopping

1. Remove the load in increments.

2. Open the circuit breaker.

3. Press the “Stop/Reset Mode” button as described in the Manual Stop Procedure section of this Operation and Maintenance Manual.

4. Allow the engine to run for at least 3 minutes to cool. The control module will shut down the engine after cool down time has been reached.

i07916155

Parallel Operation

SMCS Code: 4450

For detailed information about paralleling, see Special Instruction, UENR8557, “D350 Digital Voltage Regulator”.

i05469037

Voltage Regulators

SMCS Code: 4467

D350 Digital Voltage Regulator

The purpose of this voltage regulator is to regulate alternators with a field current of less than 5A in continuous operations, and 10A maximum in the event of short-circuit for 10 seconds maximum.

The design is in accordance with mounting in a generator terminal box, or a control cabinet. At a minimum, following the local protection and safety standards is required, especially those standards specific to electrical installations for voltages of 300 VAC phase-to-neutral maximum.

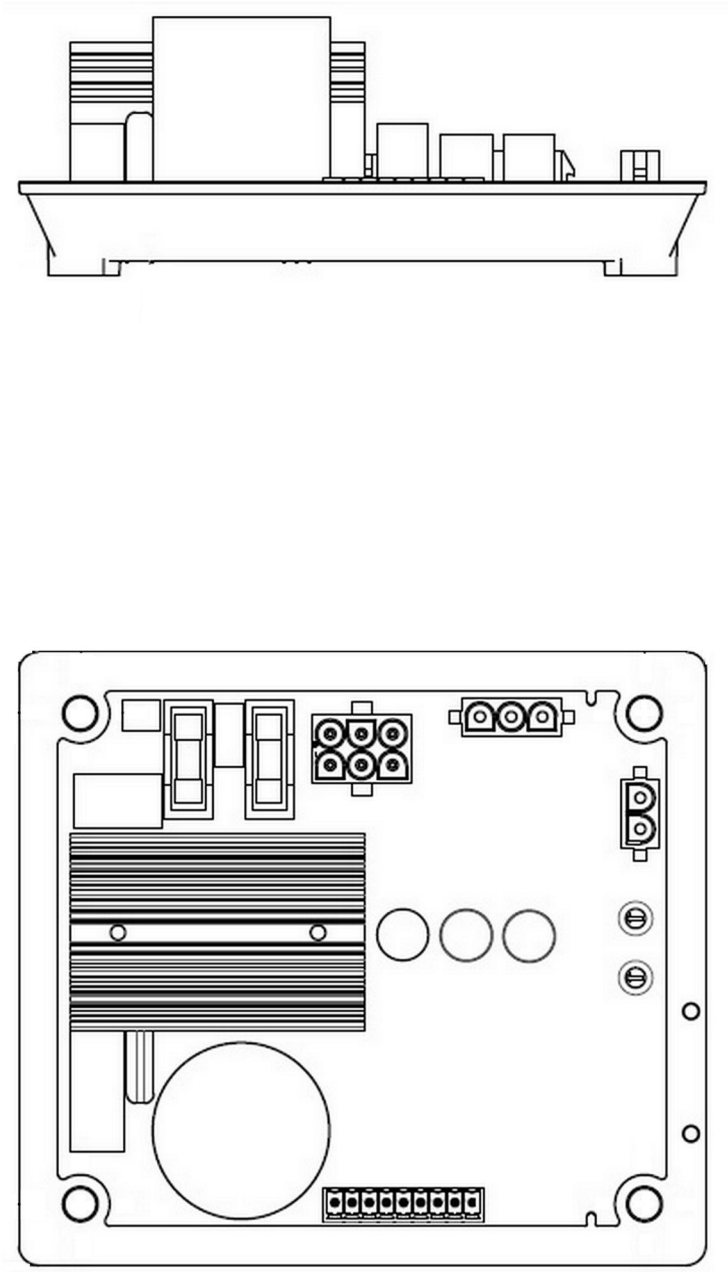

Illustration 46 g06476083
D350

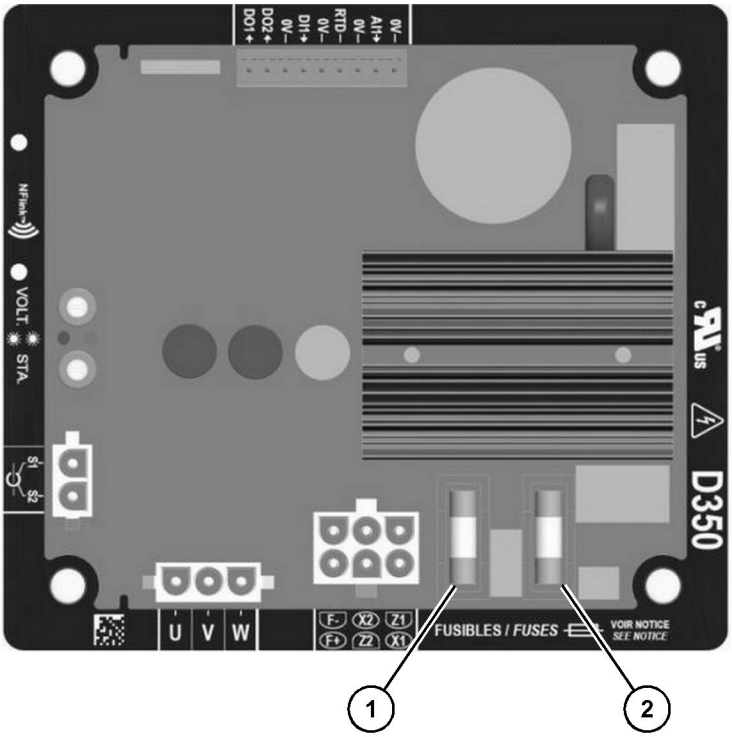

Illustration 47 g06475852

(1) F1 (2) F2

Table 7

Fuse References		
	F1	**F2**
In standard	10A, 250V ref. Mersen Q206071T or equivalent	10A, 250V ref. Mersen Q206071T or equivalent
For UL applications	8A, 250V ref. Mersen T084013T or equivalent	10A, 250V ref. Mersen Q206071T or equivalent

Similar to other AVR, the D350 is an electronic printed circuit board, protected with a polyurethane resin as shown in figure 47 .

For more information about D350, see Special Instruction, “D350 Digital Voltage Regulator”UENR8557.

Near Field Communication (NFC) Configuration Module

The D350 is equipped with NFC technology for communication and configuration purposes. For specific information about how to configure this feature on D350, refer to Special Instruction, UENR8557, “D350 Digital Voltage Regulator” NFLink Configuration Module.

Excitation

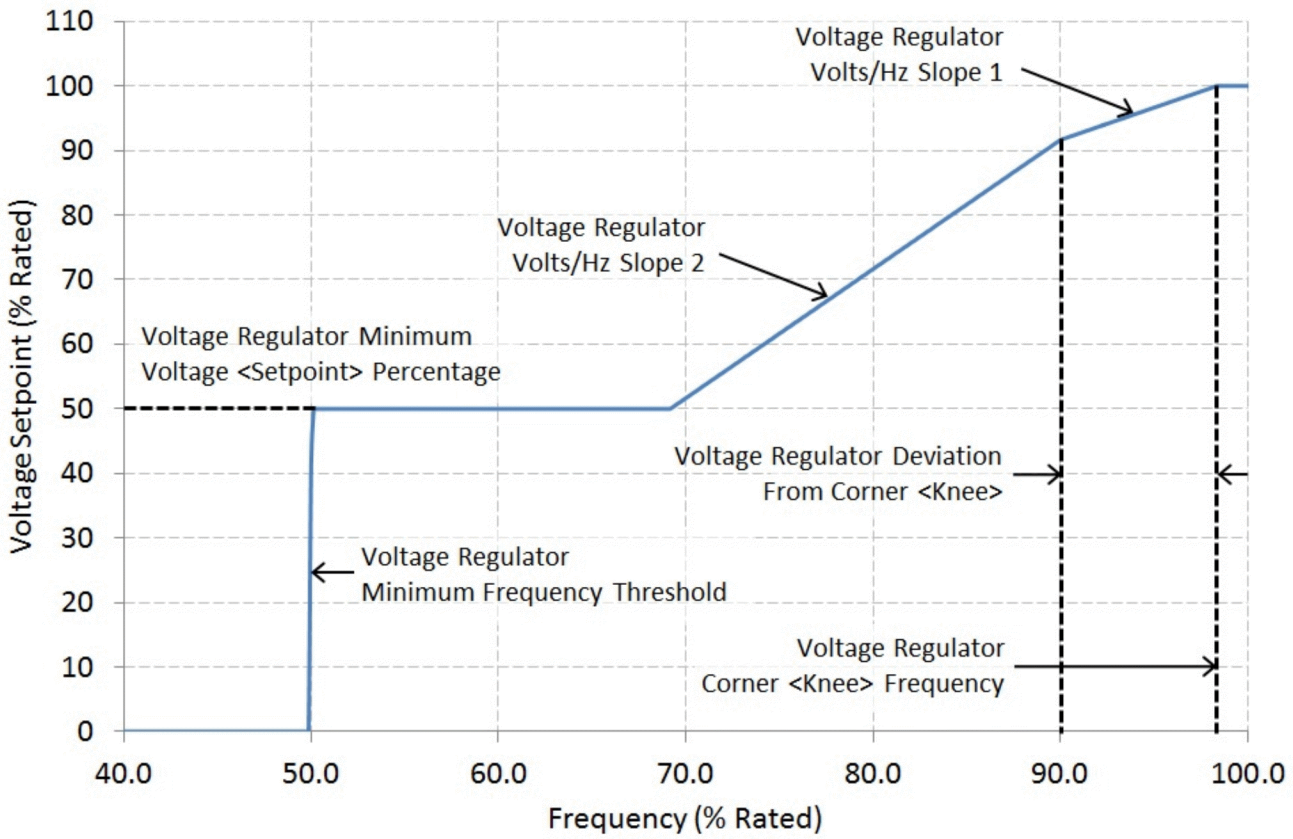

Illustration 48 g03487998

Under-frequency (loading) profile (In this example slope1 = 1.0 V/Hz, slope2 = 2.0 V/Hz)

Over-Excitation Protection

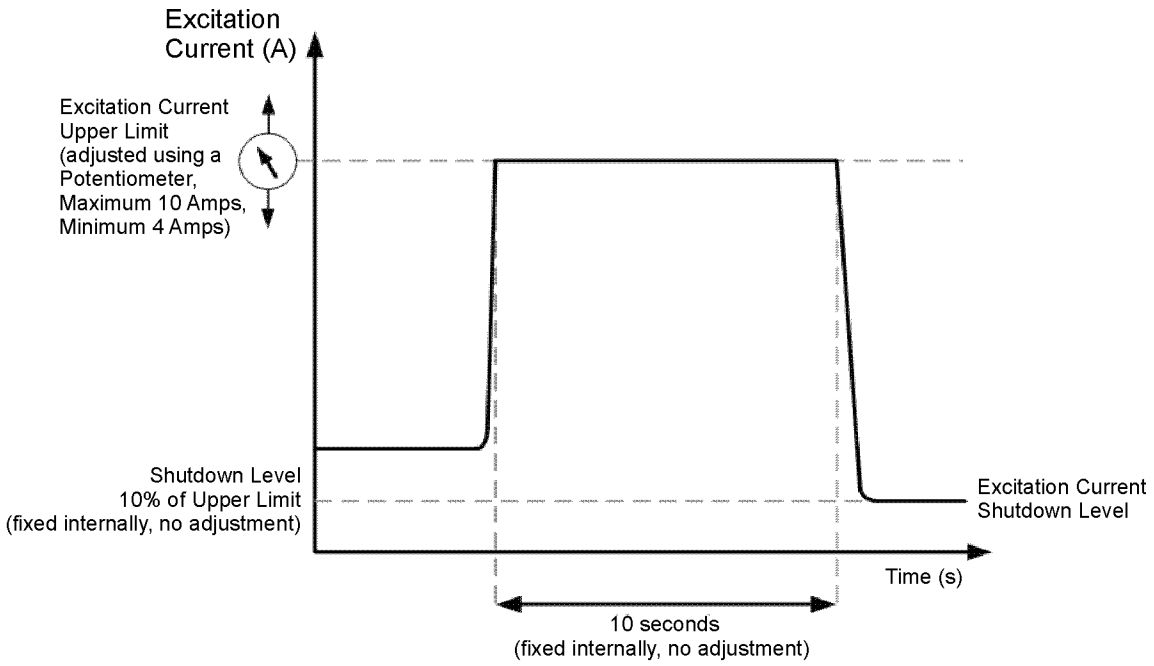

Illustration 49 g03457278

- If a short-circuit fault occurs at the generator terminals, the EM10 will allow the excitation current to rise to the upper limit value set by the adjustment potentiometer (maximum 10 Amps)
- The excitation current will be clamped at the upper limit value for 10 seconds (fixed internally)
- After 10 seconds, the excitation current is reduced to a value of 10% of the potentiometer setting

For more information about EM10, contact your Cat dealer.

Cold Weather Operation

i08230315

Fuel and the Effect from Cold Weather

SMCS Code: 1000; 1250; 1280

The following fuels are the grades that are available for Cat engines:

- No. 1
- No. 2
- Blend of No. 1 and No. 2

No. 2 diesel fuel is the most commonly used fuel. Either No. 1 diesel fuel or a blend of No. 1 and No. 2 is best suited for cold-weather operation.

Quantities of No. 1 diesel fuel are limited. No. 1 diesel fuels are available during the months of the winter in the colder climates. During cold-weather operation, if No. 1 diesel fuel is not available, use No. 2 diesel fuel, if necessary.

There are three major differences between No. 1 and No. 2 diesel fuel. No. 1 diesel fuel has the following properties:

- Lower cloud point
- Lower pour point
- Lower rating of kJ (BTU) per unit volume of fuel

When No. 1 diesel fuel is used, a decrease in power and in fuel efficiency may be noticed.

The cloud point is the temperature when a cloud of wax crystals begins to form in the fuel. These crystals can cause the fuel filters to plug. The pour point is the temperature when diesel fuel will thicken. The diesel fuel becomes more resistant to flow through fuel pumps and through fuel lines.

Be aware of these values when diesel fuel is purchased. Anticipate the average ambient temperature of the area. Engines that are fueled in one climate may not operate well if the engines are moved to another climate. Problems can result due to changes in temperature.

Before troubleshooting for low power or for poor performance in the winter, check the type of fuel that is being used.

When No. 2 diesel fuel is used, the following components provide a means of minimizing problems in cold weather:

- Starting aids
- Engine oil pan heaters
- Engine coolant heaters
- Fuel heaters
- Fuel line insulation

For more information on cold-weather operation, see Special Publication, SEBU5898, “Cold-Weather Recommendations”.

i04369188

Fuel Related Components in Cold Weather

SMCS Code: 1000; 1250; 1280

Fuel Tanks

Condensation can form in partially filled fuel tanks. Top off the fuel tanks after operating the engine.

Fuel tanks should contain some provision for draining water and sediment from the bottom of the tanks. Some fuel tanks use supply pipes that allow water and sediment to settle below the end of the fuel supply pipe.

Some fuel tanks use supply lines that take fuel directly from the bottom of the tank. If the engine is equipped with this system, regular maintenance of the fuel system filter is important.

Draining the fuel tank will help prevent water and/or sediment from being pumped from the fuel storage tank and into the engine fuel tank. Drain the water and sediment from any fuel storage tank at the following intervals:

- Weekly
- Oil changes
- Refueling of the fuel tank

Fuel Filters

NOTICE
Do not fill the fuel filters with fuel before installing them. The fuel would not be filtered and could be contaminated. Contaminated fuel will cause accelerated wear to fuel system parts.

NOTICE
Caterpillar requires the use of a 4 micron (c) secondary fuel filter for the following reasons: to maximize fuel system life and to prevent premature wear out from abrasive particles in the fuel. Cat high efficiency fuel filters meet these requirements. Consult your Cat dealer for the proper part numbers.

When the engine is equipped with a primary filter/water separator, the primary filter/water separator must use a 10 micron filter to a 15 micron filter. The filters are becoming more critical as fuel injection pressures increase to 209 MPa (30000 psi) and higher psi. For more information on priming the fuel system, see the Operation and Maintenance Manual, “Fuel System - Prime” topic.

Fuel Heaters

Fuel heaters help to prevent fuel filters from plugging in cold weather due to waxing. A fuel heater should be installed in order for the fuel to be heated before the fuel enters the primary fuel filter.

Select a fuel heater that is mechanically simple, yet adequate for the application. The fuel heater should also help to prevent overheating of the fuel. High fuel temperatures reduce engine performance and the availability of engine power. Choose a fuel heater with a large heating surface. The fuel heater should be practical in size. Small heaters can be too hot due to the limited surface area.

Disconnect the fuel heater in warm weather.

Note: Only use fuel heaters that are controlled by the water temperature regulator or fuel heaters that are self-regulating. Fuel heaters that are not controlled by the water temperature regulator can heat the fuel in excess of 65° C (149° F). A loss of engine power can occur if the fuel supply temperature exceeds 37° C (100° F).

Note: Heat exchanger type fuel heaters should have a bypass provision in order to prevent overheating of the fuel when the engine operates in warm weather.

For further information on fuel heaters, consult your Cat dealer.

Engine Stopping

i01895736

Stopping the Engine

SMCS Code: 1000

Note: Individual applications will have different control systems. Ensure that the shutoff procedures are understood. Use the following general guidelines in order to stop the engine.

1. Remove the load from the engine. Reduce the engine speed (rpm) to low idle. Perform this procedure for five to six minutes in order to cool the engine.
2. After the cool down period, move the switch to the OFF position.

i08488057

Emergency Stopping

SMCS Code: 1000; 7418

NOTICE
Emergency shutoff controls are for EMERGENCY use ONLY. DO NOT use emergency shutoff devices or controls for normal stopping procedure.

Ensure that any components for the external system that support the engine operation are secured after the engine is stopped.

NOTICE
Do not start the engine until the problem necessitating the emergency stop has been located and corrected.

Emergency Stop Button

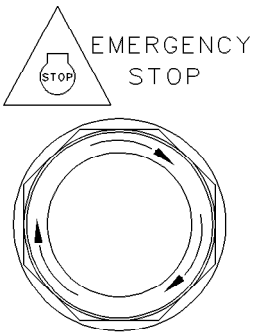

Illustration 50 g00104303
Typical emergency stop button

The emergency stop button is in the OUT position for normal engine operation. Push the emergency stop button. The engine will not start when the button is locked. Turn the button clockwise in order to reset.

i07911201

Manual Stop Procedure

SMCS Code: 1000; 7418

Illustration 51 g06476789

(1) Stop/reset mode button

Note: If a digital input configured to “Panel Lock” is active, changing module modes is not possible. Viewing the instruments and event logs is not affected by “Panel Lock” .

For further details about module configuration, refer to OEM manual.

In “Stop/Reset Mode” the module removes the generator from load (if necessary) before stopping the generator set.

If the generator does not stop when requested, the “Fail to Stop” alarm is activated (subject to the setting of the “Fail to Stop” timer. To detect the engine at rest, the following must occur:

- Engine speed is zero as detected by the “CAN ECU”
- Generator AC voltage and frequency must be zero
- Engine charge alternator voltage must be zero
- Oil pressure sensor must indicate low oil pressure

When the engine has stopped and the module is in the “Stop/Reset Mode” , configuration files can be sent to the module from “DSE Configuration Suite PC software” . Entering the “Front Panel Editor” to change parameters is also possible.

Any latched alarms that have been cleared are reset when “Stop/Reset Mode” is entered.

The engine is not started when in “Stop/Reset Mode” . If start signals are given, the input is ignored until “Auto Mode” is entered.

When left in “Stop/Reset Mode” without pressing any buttons, no form of communication active/configured for “Power Save Mode” , the module enters “Power Save Mode” . To wake the module, press any of the DSE buttons.

i02327953

After Stopping Engine

SMCS Code: 1000

- Check the engine crankcase oil level. Maintain the oil level between the “ADD” and “FULL” marks on the “ENGINE STOPPED” side of the oil level gauge. Complete all of the lubrication recommendations that are listed in Special Publication, SEBU6251, “Caterpillar Commercial Diesel Engine Fluids Recommendations”.
- If necessary, perform minor adjustments. Repair any leaks and tighten loose bolts.
- Note the service hour meter reading. Perform the maintenance that is in the Operation and Maintenance Manual, “Maintenance Interval Schedule”.
- Fill the fuel tank in order to help prevent accumulation of moisture in the fuel. Do not overfill the fuel tank.

Note: Only use the antifreeze coolant solutions that are recommended in Special Publication, SEBU6251, “Caterpillar Commercial Diesel Engine Fluids Recommendations”. Failure to follow the recommendations in Special Publication, SEBU6251, “Caterpillar Commercial Diesel Engine Fluids Recommendations” can cause engine damage.

- Allow the engine to cool. Check the coolant level. Maintain the cooling system at 13 mm (0.5 inch) from the bottom of the pipe for filling.
- If freezing temperatures are expected, check the coolant for proper antifreeze protection. The cooling system must be protected against freezing to the lowest expected outside temperature. See Special Publication, SEBU6251, “Caterpillar Commercial Diesel Engine Fluids Recommendations”. Add the proper coolant/water mixture, if necessary.

Maintenance Section

Refill Capacities

i07920055

Refill Capacities

SMCS Code: 1000; 1348; 1395; 7560

NOTICE
Every attempt is made to provide accurate, up-to-date information. By the use of this document, you agree that Caterpillar Inc. is not responsible for errors or omissions.

NOTICE
These recommendations are subject to change without prior notice. Contact your Caterpillar dealer for the most up to date recommendations.

Refer to Special Publication, SEBU6251, “Caterpillar Commercial Engine Fluids Recommendations” for additional information.

Refer to this Operation and Maintenance Manual, “Severe Service Application – Check” for information about operating an engine in a severe service application.

Diesel Engine Oil

The refill capacities for the engine crankcase reflect the approximate capacity of the crankcase or sump plus standard oil filters. Auxiliary oil filter systems will require additional oil. Refer to the OEM specifications for the capacity of the auxiliary oil filter. Refer to this Operation and Maintenance Manual, “Fluid Recommendations” for information about the types of fluids for use in the engine.

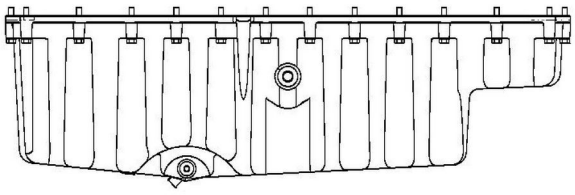

Illustration 52 g06489042
Oil pan for the C9

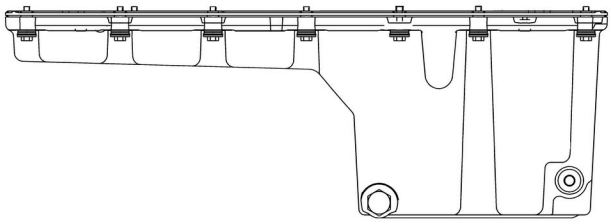

Illustration 53 g06489025
Oil pan for the C13

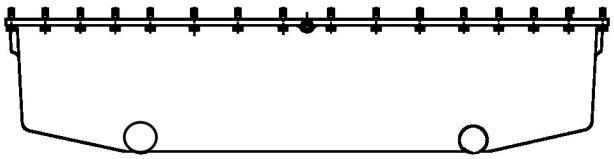

Illustration 54 g02109598
Oil pan for the C15 and C18

Table 8

Engine Approximate Refill Capacities				
Engine model	**C9**	**C13**[1]	**C15**	**C18**
Engine crankcase	**41 L (43.3 qt)**	**40 L (42.30 qt)**	**64 L (67.6 qt)**	**68 L (71.9 qt)**

(1) These values are approximate capacities for the crankcase oil sump which include the standard oil filters that are installed at the factory. Engines with auxiliary oil filters will require additional oil. Refer to the OEM specifications for the capacity of the auxiliary oil filter.

For more information about lubricants, refer to Special Publication, SEBU6251, “Cat Commercial Diesel Engine Fluids Recommendations”.

Cooling System

To maintain the cooling system, the total cooling system capacity must be known. The capacity of the total cooling system will vary. The capacity will depend on the size of the radiator (capacity).

Table 9

Approximate Capacity of the Cooling System		
Total Cooling System (1)	Liters	Quarts

(continued)

(Table 9, contd)

C9	45	47.5
C13	38	40.1
C15	43	45.4
C18	49	51.7

(1) The total cooling system capacity includes the following components: the engine block, the radiator, and all coolant hoses and lines.

For more information about coolants, refer to Special Publication, SEBU6251, “Cat Commercial Diesel Engine Fluids Recommendations”.

i09331502

Fluid Recommendations

SMCS Code: 1280; 1348; 1395; 7560

Refer to this Operation and Maintenance Manual, “Severe Service Application” for information about operating an engine in a severe service application.

Note: The interval for changing the coolant varies depending on the type of coolant being replaced. Refer to this article, “Coolant Recommendations”, for the intervals for changing the coolant.

Diesel Engine Oil

For more information, refer to Special Publication, SEBU6251, “Cat Commercial Diesel Engine Fluids Recommendations”.

Cat Diesel Engine Oil (Cat DEO)

Cat oils have been developed and tested in order to provide the full performance and service life that has been designed and built into Cat engines. Cat oils are currently used to fill Cat Diesel Engines at the factory. These oils are offered by Cat dealers for continued use when the engine oil is changed. Consult your Cat dealer for more information on these oils.

Due to significant variations in the quality and in the performance of commercially available oils, Caterpillar makes the following recommendations:

Table 10

Cat Lubricants		Viscosity Grade
Diesel Engine Oil-Ultra Low Sulfur	Cat DEO-ULS	SAE 15W-40
		SAE 10W-30
	Cat DEO-ULS SYN	SAE 5W-40
	Cat Cold Weather DEO-ULS	SAE 0W-40

(continued)

(Table 10, contd)

Cat Lubricants		Viscosity Grade
Diesel Engine Oil	Cat DEO	SAE 15W-40
		SAE 10W-30
	Cat DEO SYN	SAE 5W-40

Note: Cat DEO and Cat DEO-ULS multigrade oils are the preferred oils for use in this Cat Diesel Engine.

Commercial Oil

Note: Non-Cat commercial oils are second choice oils for your engine.

NOTICE
Caterpillar does not warrant the quality or performance of non-Cat fluids.

The three current Caterpillar ECF specifications are: Cat ECF-1-a, Cat ECF-2 and Cat ECF-3. Each higher Cat ECF specification provides increased performance over lower Cat ECF specifications.

A commercial oil must meet the following standards to be considered an equivalent of a Cat Diesel Engine Oil:

Table 11

Cat Engine Crankcase Fluids (ECF) Definitions	
Cat Performance Requirement	Cat ECF Specifications Requirements
Cat ECF-3	API CJ-4 Oil Category performance requirements
Cat ECF-2	API CI-4 / CI-4 PLUS Oil Category performance requirements
	Passing standard Cat C13 engine test per API requirements
	Oils of sulfated ash > 1.50 percent are not allowed
Cat ECF-1-a	API CH-4 Oil Category performance requirements
	For oils that are between 1.30 percent and 1.50 percent sulfated ash, passing one additional Cat 1P SCOTE test (“ASTM D6681”) is required
	Oils of sulfated ash > 1.50 percent are not allowed

In selecting oil for any engine application, both of the following must be satisfied: the oil viscosity and the category of oil performance or the specification for oil performance . Using only one of these parameters will not sufficiently define oil for an engine application.

The proper SAE viscosity grade of oil is determined by the following temperatures: minimum ambient temperature during cold engine start-up and maximum ambient temperature during engine operation.

Refer to Table 12 (minimum temperature) in order to determine the required oil viscosity for starting a cold engine.

Refer to Table 12 (maximum temperature) in order to select the oil viscosity for engine operation at the highest ambient temperature that is anticipated.

Note: Generally, use the highest oil viscosity that is available to meet the requirement for the temperature at start-up.

Table 12

Lubricant Viscosities for Ambient Temperatures for Cat Diesel Engines					
Oil Type and Performance Requirements	**Viscosity Grade**	**°C**		**°F**	
		Min	**Max**	**Min**	**Max**
Cat ECF-1-a Cat ECF-2 Cat ECF-3	SAE 0W-30	−40	30	−40	86
Cat Cold Weather DEO-ULS Cat ECF-1-a Cat ECF-2 Cat ECF-3	SAE 0W-40	−40	40	−40	104
Cat DEO-ULS Cat ECF-1-a Cat ECF-2 Cat ECF-3	SAE 5W-30	−30	30	−22	86
Cat DEO-ULS SYN **Cat DEO** Cat ECF-1-a Cat ECF-2 Cat ECF-3	SAE 5W-40	−30	50	−22	122
Cat ECF-1-a Cat ECF-2 Cat ECF-3	SAE 10W-30	−18	40	0	104
Cat DEO-ULS **Cat DEO**	SAE 10W-40	−18	50	0	122
	SAE 15W-40	−9.5	50	15	122

Note: A cold soaked start occurs when the engine has not been operated recently, allowing the oil to become more viscous due to cooler ambient temperatures. Supplemental heat is recommended for cold soaked starts below the minimum ambient temperature. Supplemental heat may be necessary for cold soaked starts that are above the minimum temperature depending on factors such as parasitic load.

Total Base Number (TBN) and Fuel Sulfur Levels

The use of Cat S·O·S Services oil analysis is recommended strongly for determining oil life.

The minimum required Total Base Number (TBN) for oil depends on the fuel sulfur level. The TBN for new oil is typically determined by the “ASTM D2896” procedure. For direct injection engines that use distillate fuel, the following guidelines apply:

Table 13

TBN recommendations for applications in Cat engines (1)		
Fuel Sulfur Level percent (ppm)	Cat Engine Oils	TBN of Commercial Engine Oils
≤0.05 percent (≤500 ppm)	Cat DEO-ULS Cat DEO	Min 7
0. 1- 0.05 percent (1000-500 ppm)	Cat DEO-ULS Cat DEO	Min 7
Above 0.1 percent (above 1000 ppm)(2)	Cat DEO(3)	Min 10

(1) When using fuel with 0.10% sulfur (1000 ppm) or higher, refer to this Operation and Maintenance Manual, “Severe Service Application” for more information.
(2) For fuels of sulfur levels that exceed 1.0 percent (10,000 ppm), refer to TBN and engine oil guidelines given in this section.
(3) Cat DEO-ULS may be used if an oil analysis program is followed. Base the oil change interval on the analysis.

S·O·S Services Oil Analysis

Caterpillar has developed a maintenance tool that evaluates oil degradation. the maintenance management also detects the early signs of wear on internal components. The Caterpillar tool for oil analysis is called S·O·S oil analysis and the tool is part of the S·O·S Services program. S·O·S oil analysis divides oil analysis into four categories:

- Component wear rate
- Oil condition
- Oil contamination
- Identification of oil

These four types of analysis are used to monitor the condition of your equipment. The four types of analysis will also help you identify potential problems. A properly administered S·O·S oil analysis program will reduce repair costs and the program will lessen the impact of downtime.

The S·O·S Oil Analysis program uses a wide range of tests to determine the condition of the oil and the crankcase. Guidelines that are based on experience and a correlation to failures have been established for these tests. Exceeding one or more of these guidelines could indicate serious fluid degradation or a pending component failure. A trained person at your Cat dealership should make the final analysis.

NOTICE
Always use a designated pump for oil sampling, and use a separate designated pump for coolant sampling. Using the same pump for both types of samples may contaminate the samples that are being drawn. This contaminate may cause a false analysis and an incorrect interpretation that could lead to concerns by both dealers and customers.

Refer to Special Publication, SEBU6251, “Cat Commercial Diesel Engine Fluids Recommendations” in order to obtain additional information about S·O·S Services oil analysis. You can also contact your local Cat dealer.

Fuel

Note: Caterpillar strongly recommends the filtration of fuel through a fuel filter with a rating of four microns(c) absolute or less. This filtration should be located on the device that dispenses the fuel to the fuel tank for the engine. This filtration should also be located on the device that dispenses fuel from the bulk storage tank. Series filtration is recommended.

NOTICE
In order to meet expected fuel system component life, 4 micron(c) absolute or less secondary fuel filtration is required for all Cat Diesel Engines that are equipped with unit injected fuel systems. All current Cat Diesel Engines are factory equipped with Cat Advanced Efficiency 4 micron(c) absolute fuel filters.

Caterpillar does not warrant the quality or performance of non-Cat fluids and filters.

Diesel engines can burn a wide variety of fuels. These fuels are divided into two general groups. The two groups are called the preferred fuels and the permissible fuels.

Note: The permissible fuels are some crude oils, some blends of crude oil with distillate fuel, some biodiesel, and some marine diesel fuel. These fuels are not suitable for use in all engine applications. The acceptability of these fuels for use is determined on an individual basis. A complete fuel analysis is required.

For more information, refer to Special Publication, SEBU6251, “Cat Commercial Diesel Engine Fluids Recommendations” or consult your Cat dealer for further information.

Diesel Distillate Fuel

Diesel engines may burn a wide variety of fuels. These fuels are divided into two general groups. The two groups are called the preferred fuels and the permissible fuels.

The preferred fuels provide maximum engine service life and performance. The preferred fuels are distillate fuels. These fuels are commonly called diesel fuel, furnace oil, gas oil, or kerosene. These fuels must meet the “Cat Specification for Distillate Diesel Fuel for Off-Highway Diesel Engines” found in this Special Publication, “Distillate Diesel Fuel” article.

Note: The permissible fuels are some crude oils, some blends of crude oil with distillate fuel, some biodiesel, and some marine diesel fuel. **These fuels are not suitable for use in all engine applications.** The acceptability of these fuels for use is determined on a case by case basis. A complete fuel analysis is required. Consult your Cat dealer for further information.

NOTICE
The footnotes are a key part of the “Caterpillar Specification for Distillate Diesel Fuel for Off-Highway Diesel Engines” Table. Read ALL of the footnotes.

Table 14

Caterpillar Specification for Distillate Fuel for Nonroad Diesel Engines			
Specifications	**Requirements**	**ASTM Test**	**ISO Test**
Aromatics	35% maximum	“D1319”	“ISO 3837”
Ash	0.01% maximum (weight)	“D482”	“ISO 6245”
Carbon Residue on 10% Bottoms	0.35% maximum (weight)	“D524”	“ISO 4262”
Cetane Number (1)	40 minimum (DI engines)	“D613” or “D6890”	“ISO 5165”
	35 minimum (PC engines)		
Cloud Point	The cloud point must not exceed the lowest expected ambient temperature.	“D2500”	“ISO 3015”
Copper Strip Corrosion	No. 3 maximum	“D130”	“ISO 2160”
Distillation	10% at 282 °C (540 °F) maximum	“D86”	“ISO 3405”

(continued)

(Table 14, contd)

Caterpillar Specification for Distillate Fuel for Nonroad Diesel Engines			
Specifications	**Requirements**	**ASTM Test**	**ISO Test**
	90% at 360 °C (680 °F) maximum		
Flash Point	legal limit	"D93"	"ISO 2719"
Thermal Stability	Minimum of 80% reflectance after aging for 180 minutes at 150 °C (302 °F)	"D6468"	No equivalent test
API Gravity (2)	30 minimum	"D287"	No equivalent test
	45 maximum		
Pour Point	6 °C (10 °F) minimum below ambient temperature	"D97"	"ISO 3016"
Sulfur	(3)(4)(5)	"D5453" or "D2622"	ISO 20846 or ISO 20884
Kinematic Viscosity	1.4 cSt minimum and 20.0 cSt maximum as delivered to the fuel injection pumps	-	-
	1.4 cSt minimum and 4.5 cSt maximum as delivered to the rotary fuel injection pumps		
Water and Sediment	0.05% maximum	"D1796" or "D2709"	"ISO 3734"
Water	0.05% maximum	"D6304"	No equivalent test
Sediment	0.05% maximum (weight)	"D473"	"ISO 3735"
Gums and Resins (6)	10 mg per 100 mL maximum	"D381"	"ISO 6246"
Lubricity	0.52 mm (0.0205 inch) maximum at 60 °C (140 °F)	"D6079"	No equivalent test

(1) Alternatively, to ensure a minimum cetane number of 35 (PC engines), and 40 (DI engines), distillate diesel fuel should have a minimum cetane index of 37.5 (PC engines), and 44.2 (DI engines) when the "ASTM D4737-96a" test method is used. A fuel with a higher cetane number may be required for operation at a higher altitude or in cold weather.

(continued)

(Table 14, contd)

(2) Via standards tables, the equivalent kg/m^3 (kilograms per cubic meter) using the "ASTM D287" test method temperature of 15.56° C (60° F) for the minimum API gravity of 30 is 875.7 kg/m^3, and for the maximum API gravity of 45 is 801.3 kg/m^3.

(3) ULSD 0.0015% (<15 ppm S) is required by law for Tier 4 engines and engines with aftertreatment devices.

(4) Certain Cat fuel systems and engine components can operate on fuel with a maximum sulfur content of 3%. Contact your Cat dealer for guidance about appropriate maintenance intervals and fluids for engines operating on fuel with sulfur levels between 0.1% and 3%.

(5) An engine which operates on fuel with 0.1% (1000 ppm) of sulfur or more is operating in a severe service application. Refer to this Operation and Maintenance Manual, "Severe Service Application" for information about operating an engine in a severe service application.

(6) Follow the test conditions and procedures for gasoline (motor).

Biodiesel

A biodiesel blend of up to 20 percent may be used in the engine when the fuel blend meets the recommendations in table 15 and meets the recommendations in Special Publication, SEBU6251, "Biodiesel".

Note: A complete Cat S·O·S Services oil analysis program is **recommended strongly** when using biodiesel blends above 5 percent.

Table 15

Biodiesel Blends for Cat Commercial Diesel Engines		
Biodiesel blend stock	Final blend	Distillate diesel fuel used for blend
Caterpillar biodiesel specification, "ASTM D6751" or "EN14214"	B20: "ASTM D7467" and "API" gravity 30-45	Caterpillar distillate diesel fuel specification, "ASTM D975" or "EN590"

Fuel Additives

Cat Diesel Fuel Conditioner

Cat Diesel Fuel Conditioner is a proprietary formulation that has been extensively tested for use with distillate diesel fuels for use in Cat Diesel Engines. Cat Diesel Fuel Conditioner is a high performance diesel fuel conditioner for use with lower quality fuels that do not meet the minimum requirements of any of the following:

- "Caterpillar Specification for Distillate Diesel Fuel"
- National Conference on Weights and Measures (NCWM) Premium Diesel definition (refer to the 2004 or newer National Institute of Standards & Technology (NIST) Handbook).
- EN590 (non-arctic)
- ASTM D975

Cat Diesel Fuel Conditioner is the only fuel conditioner/additive available to the end user that is tested and approved by Caterpillar for use in Cat Diesel Engines.

Refer to Special Publication, SEBU6251, “Cat Commercial Diesel Engine Fluids Recommendations” for information about the use of Cat Diesel Fuel Conditioner.

Cat Diesel Fuel System Cleaner

Note: Cat Diesel Fuel System Cleaner is the only fuel system cleaner available to the end user that is tested and approved by Caterpillar for use in Cat Diesel Engines.

Cat Diesel Fuel System Cleaner is a proven high performance detergent product designed specifically for cleaning deposits that form in the fuel system. Deposits in the fuel system reduce system performance and can increase fuel consumption. Cat Diesel Fuel System Cleaner addresses the deposits formed due to the use of degraded diesel fuel, poor quality diesel fuel, and diesel fuel containing high quantities of high molecular weight compounds. Cat Diesel Fuel System Cleaner addresses deposits formed due to the use of biodiesel, biodiesel blends, and biodiesel that does not meet the appropriate quality specifications. Continued use of Cat Diesel Fuel System Cleaner is proven to inhibit the growth of new deposits.

Caterpillar strongly recommends that Cat Diesel Fuel System Cleaner be used with biodiesel and biodiesel blends. Cat Diesel Fuel System Cleaner is suitable for use with biodiesel/biodiesel blends that meet Caterpillar biodiesel recommendations and requirements. Not all fuel cleaners are suitable for use with biodiesel/biodiesel blends. Read and follow all applicable label usage instructions. Also, refer to Special Publication, SEBU6251, “Cat Commercial Diesel Engine Fluids Recommendations” “Distillate Diesel Fuel”, article and also refer to the “Biodiesel” article, which includes Caterpillar biodiesel recommendations and requirements.

Aftermarket Fuel Additives

There are many different types of fuel additives that are available to use. Caterpillar does not generally recommend the use of fuel additives.

In special circumstances, Caterpillar recognizes the need for fuel additives. Use fuel additives with caution. The additive may not be compatible with the fuel. Some additives may precipitate. This action causes deposits in the fuel system. The deposits may cause seizure. Some additives may plug fuel filters. Some additives may be corrosive, and some additives may be harmful to the elastomers in the fuel system. Some additives may damage emission control systems. Some additives may raise fuel sulfur levels above the maximum levels that are allowed by the following agencies: EPA and other regulatory agencies. Contact your fuel supplier for those circumstances when fuel additives are required. Your fuel supplier can make recommendations for additives to use and for the proper level of treatment.

Note: For best results, your fuel supplier should treat the fuel when additives are needed.

Cooling System

Note: Refer to Special Publication , SEBU6251, “Cat Commercial Diesel Engine Fluids Recommendations” for complete information about the proper fluids for use in the cooling system.

⚠ WARNING

The cooling system operates under pressure which is controlled by the radiator pressure cap. Removing the cap while the system is hot may allow the escape of hot coolant and steam, causing serious burns.

Before you remove the radiator cap, allow the system to cool. Use a thick cloth and turn the radiator cap slowly to the first stop to allow pressure to escape before fully removing the cap.

Avoid contact with coolant.

NOTICE
Never add coolant to an overheated engine. Engine damage could result. Allow the engine to cool first.

NOTICE
If the engine is to be stored in, or shipped to an area with below freezing temperatures, the cooling system must be either protected to the lowest outside temperature or drained completely in order to prevent damage caused by freezing coolant.

Never operate an engine without water temperature regulators in the cooling system. Water temperature regulators help to maintain the engine coolant at the proper operating temperature. Cooling system problems can develop without water temperature regulators. Removing the regulators allows some coolant to bypass the radiator, potentially causing overheating.

Coolant Recommendations

Note: A Cat Diesel Engine equipped with air-to-air aftercooling (ATAAC) requires a minimum of 30 percent glycol to help prevent water pump cavitation.

Table 16

Coolant Recommendations for use in Cat Diesel Engines			
Recommendations	**Product**	**Service Hours** (1)(2)(3)	**Required Maintenance**
Preferred	Cat ELC (Cat Extended Life Coolant)	12000 hours or 6 years	Add Cat ELC Extender at 6000 service hours or one half of service life
	Cat ELI (Cat Extended Life Inhibitor)	12000 hours or 6 years	Add Cat ELC Extender at 6000 service hours or one half of service life
Min requirements	Cat EC-1 specification and “ASTM D6210” and Organic Additive Technology (OAT) based on a combination of a monocarboxylic acid and a dicarboxylic acid Phosphate, borate, and silicate free Tolyltriazole: minimum typical concnetration of 900 ppm Nitrite: minimum typical concentration of 500 ppm in new coolants	6000 hours or 6 years	Add Extender at 3000 service hours or one half of service life
Acceptable	Cat DEAC (Cat Diesel Engine Antifreeze/Coolant)	3000 hours or 3 years	SCA (Supplemental coolant additive) at maintenance intervals
Min requirements for fully formulated Heavy Duty Commercial coolants	“ASTM D6210” and Nitrite (as NO2) concentration: Minimum of 1200 ppm (70 grains/US gal) and maximum of 2400 ppm (140 grains/US gal) Silicon concentration: minimum of 100 ppm and maximum of 275 ppm	3000 hours or 2 years	SCA at maintenance intervals
Min requirements for Commercial coolants requiring SCA precharge	“ASTM D4985” and(1) Nitrite (as NO2) concentration: Minimum of 1200 ppm (70 grains/US gal) and maximum of 2400 ppm (140 grains/US gal) Silicon concentration: minimum of 100 ppm and maximum of 275 ppm	3000 hours or 1 year	SCA at initial fill and SCA at maintenance intervals

(1) New Coolants at 50 volume percent diluted. Coolants that are prediluted at the coolant manufacturer must be diluted with water that meets Reagent 4 “ASTM D1193” requirements.
(2) Maintain the in-service coolant at the given limits.
(3) When referring to the service hours, use the interval that occurs first. These coolant change intervals are only achievable with annual S·O·S Services Level 2 coolant sampling analysis.

Table 17

Special Requirements	
Cat C7-C32 Marine Engines with heat exchangers	Minimum of 30% glycol is required. 50% Glycol is recommended. Water alone or water with SCA or with ELI is NOT allowed.
Cat diesel engines equipped with air-to-air aftercooling (ATAAC)	

NOTICE
Use Only Approved SCAs and Extenders

Conventional coolants require the maintenance addition of SCA throughout the expected life of the coolants. Do NOT use an SCA with a coolant unless approved specifically by the coolant supplier. The coolant manufacturer is responsible for ensuring compatibility and acceptable performance.

To help ensure expected performance, EC-1 coolants require the one time maintenance addition of an extender at coolant service mid-life. Do not use an extender with a coolant unless the extender has been approved specifically for use by the coolant manufacturer. The coolant manufacturer is responsible for ensuring compatibility and acceptable performance.

Failure to follow these recommendations can result in shortened cooling system component life.

Cat ELC can be recycled into conventional coolants.

For more information, refer to Special Publication, SEBU6251, “Cat Commercial Diesel Engine Fluids Recommendations”.

S·O·S Services Coolant Analysis

Testing the engine coolant is important to ensure that the engine is protected from internal cavitation and corrosion. The analysis also tests the ability of the coolant to protect the engine from boiling and freezing. S·O·S coolant analysis can be done at your Cat dealer. Cat S·O·S coolant analysis is the best way to monitor the condition of your coolant and your cooling system. S·O·S coolant analysis is a program that is based on periodic samples.

Table 18

Recommended Interval		
Type of Coolant	**Level 1**	**Level 2**
Cat DEAC Conventional Heavy-Duty Coolants	Every 250 hours	Yearly[1]
Cat ELC Cat ELI Commercial EC-1 Coolants	Optional	Yearly

[1] The Level 2 Coolant Analysis should be performed sooner if a problem is suspected or identified.

Note: Check the SCA (Supplemental Coolant Additive) of the conventional coolant at every oil change or at every 250 hours. Perform this check at the interval that occurs first.

S·O·S Services Coolant Analysis (Level 1)

A coolant analysis (Level 1) is a test of the properties of the coolant.

The following properties of the coolant are tested:

- Glycol concentration for freeze protection and boil protection
- Ability to protect from erosion and corrosion
- pH
- Conductivity
- Visual analysis
- Odor analysis

The results are reported, and appropriate recommendations are made.

S·O·S Services Coolant Analysis (Level 2)

A coolant analysis (Level 2) is a comprehensive chemical evaluation of the coolant. This analysis is also a check of the overall condition of the cooling system.

The S·O·S coolant analysis (Level 2) has the following features:

- Full coolant analysis (Level 1)
- Identification of metal corrosion and of contaminants
- Identification of buildup of the impurities that cause corrosion
- Identification of buildup of the impurities that cause scaling
- Determination of the possibility of electrolysis within the cooling system of the engine

The results are reported, and appropriate recommendations are made.

For more information on S·O·S coolant analysis, consult your Cat dealer.

Greases

If it is necessary to choose a single grease, always choose a grease that meets or exceeds the requirements of the most demanding application. Remember that the products which barely meet the minimum performance requirements can be expected to barely produce the minimum lives of your parts. False economy is being used if a grease is purchased with the lowest cost as the only consideration. Instead, use the grease that yields the lowest total operating cost. The cost should be based on an analysis that includes the costs of parts, labor, downtime, and the cost of the amount of grease that is required.

For more information, refer to Special Publication, SEBU6251, “Cat Commercial Diesel Engine Fluids Recommendations”.

Maintenance Recommendations

i08259062

General Maintenance Information

SMCS Code: 4450; 7000

Note: Read the warnings and read the instructions that are contained in the Safety Section of this manual. These warnings and instructions must be understood before you perform any operation or any maintenance procedures.

Rotating electric machines are complex structures that are exposed to the following forms of stress:

- mechanical
- electrical
- thermal
- environmental

These stresses may be of varying magnitudes. The electrical insulation systems are susceptible to damage that is caused by the stresses that are listed above. Exposure to these stresses may shorten the effective life of the electrical insulation system. Therefore, the service life of an electric machine will largely depend on the serviceability of the electrical insulation systems. An inspection program and a testing procedure are recommended. An inspection program and a testing procedure will ensure that the equipment is maintained in satisfactory condition. Maintaining the equipment will increase field reliability.

A regular maintenance and inspection program can provide an evaluation of the present condition of the equipment. A regular maintenance program and a regular inspection program can also reveal future problems. The frequency of this maintenance program will depend on the following factors:

- application
- environmental conditions
- experience level of the operator
- philosophy of the operator

A regular maintenance program is recommended. This program would involve the following steps:

- periodic disassembly
- knowledgeable visual examination of the equipment
- the application of electrical tests

Never perform a test over the rated potential. These tests can damage insulation that is contaminated or insulation that is in marginal condition. For more information, refer to “I.E.E.E. Standard 432-1992” or consult a Cat dealer.

i08186078

System Pressure Release

SMCS Code: 1250; 1300; 1350; 5050

Coolant System

WARNING

Pressurized system: Hot coolant can cause serious burn. To open cap, stop engine, wait until radiator is cool. Then loosen cap slowly to relieve the pressure.

To relieve the pressure from the coolant system, turn off the engine. Allow the cooling system pressure cap to cool. Remove the cooling system pressure cap slowly to relieve pressure.

Fuel System

To relieve the pressure from the fuel system, turn off the engine.

High-Pressure Fuel Lines (If Equipped)

WARNING

Contact with high pressure fuel may cause fluid penetration and burn hazards. High pressure fuel spray may cause a fire hazard. Failure to follow these inspection, maintenance and service instructions may cause personal injury or death.

The high-pressure fuel lines are between the high-pressure fuel pump and the high-pressure fuel manifold. The high-pressure fuel lines are also between the fuel manifold and cylinder head. These fuel lines are different from fuel lines on other fuel systems.

The following are the differences:

- The high-pressure fuel lines are constantly charged with high pressure.
- The internal pressures of the high-pressure fuel lines are higher than other types of fuel system.

Before any service or repair is performed on the engine fuel lines, perform the following tasks:

1. Stop the engine.

2. Wait for 10 minutes.

Do not loosen the high-pressure fuel lines to remove air pressure from the fuel system.

Engine Oil

To relieve pressure from the lubricating system, turn off the engine.

i09570478

Welding on Engines with Electronic Controls

SMCS Code: 1000

NOTICE
Because the strength of the frame may decrease, some manufacturers do not recommend welding onto a chassis frame or rail. Consult the OEM of the equipment or your Cat dealer regarding welding on a chassis frame or rail.

Proper welding procedures are necessary to avoid damage to the engine ECM, sensors, and associated components. When possible, remove the component from the unit and then weld the component. If removal of the component is not possible, the correct procedure must be followed. When welding on a unit that is equipped with a Cat Electronic Engine, the following is considered to be the safest procedure:

NOTICE
Do not ground the welder to electrical components such as the ECM or sensors. Improper grounding can cause damage to the drive train, the bearings, hydraulic components, electrical components, and other components.

Do not ground the welder across the centerline of the package. Improper grounding could cause damage to the bearings, the crankshaft, the rotor shaft, and other components.

Clamp the ground cable from the welder to the component that will be welded. Place the clamp as close as possible to the weld. This will help reduce the possibility of damage.

Note: Perform the welding in areas that are free from explosive hazards.

1. Stop the engine. Turn the switched power to the OFF position.

2. Disconnect the negative battery cable from the battery. If a battery disconnect switch is provided, open the switch.

3. Disconnect the J1/P1 and J2/P2 connectors from the ECM. Move the harness to a position that will not allow the harness to move back accidentally, and contact any of the ECM pins.

4. Disconnect any component with a microprocessor from the engine harness, such as:

- Engine ECM
- Product Link
- Cell/Sat Radio
- Control panel (70–pin bulkhead connector)
- DOC Identity Modules

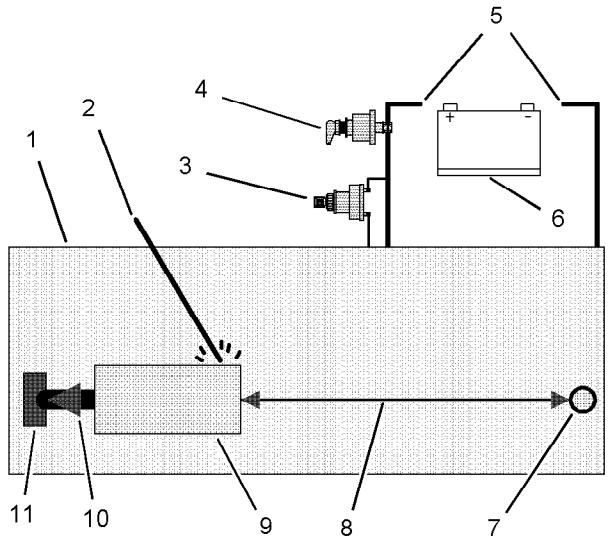

Illustration 55 g01075639

Use the example above. The current flow from the welder to the ground clamp of the welder will not damage any associated components.

(1) Engine
(2) Welding electrode
(3) Keyswitch in the OFF position
(4) Battery disconnect switch in the open position
(5) Disconnected battery cables
(6) Battery
(7) Electrical/Electronic component
(8) Minimum distance between the component that is being welded and any electrical/electronic component
(9) The component that is being welded
(10) Current path of the welder
(11) Ground clamp for the welder

5. Connect the welding ground cable directly to the part that will be welded. Place the ground cable as close as possible to the weld. This location will reduce the possibility of welding current damage to bearings, hydraulic components, electrical components, and ground straps.

Note: If electrical/electronic components are used as a ground for the welder, current flow from the welder could severely damage the component. Current flow from the welder could also severely damage electrical/electronic components that are located between the welder ground and the weld.

6. Protect the wiring harness from welding debris and spatter.

7. Use standard welding practices to weld the materials.

i01980600

Generator Start-up Checklist

SMCS Code: 4450

Table 19

GENERATOR START-UP CHECKLIST						
RATING INFORMATION						
Engine Serial Number: _____			Arrangement Number: _____			
Generator Serial Number: _____			Arrangement Number: _____			
GENERATOR NAME PLATE INFORMATION						
Voltage: _____		Package (prime, continuous, standby): _____				
Amperage: _____		Kilowatts: _____				
Storage Location:						
Main Stator Megohmmeter Reading:	Before Storage:		After Storage:			
Generator dried for 24 hours prior to start-up?		(Y/N)	Drying method:			
SPACE HEATERS	**Yes**	**No**	**Comments**			
Space heaters operating properly?						
Space heater operated 48 hours. before start-up?						
MEGOHMMETER TEST (SEHS9124)	30 sec. reading	60 sec. reading	30 sec. corrected	60 sec. corrected	Ambient temp.	Comments
Beginning of Storage	Main Stator					
	Main Rotor					
	Exciter Stator					
	Exciter Rotor					
	PMG Stator					

(continued)

(Table 19, contd)

GENERATOR START-UP CHECKLIST							
Start-up	Main Stator						
	Main Rotor						
	Exciter Stator						
	Exciter Rotor						
	PMG Stator						
No Load	**Regulator R448**	**Voltage**	**Amps**	**Comments**			
	E- to E+	DC					
	0 to 220 or 380(1)	AC					
	Self-Excited X1 to X2	AC					
	Permanent Magnet Excited X1 to X2	AC					
	Permanent Magnet Excited X1 to Z2	AC					
	Permanent Magnet Excited X2 to Z2	AC					
	AREP X1 to X2	AC					
	AREP Z1 to Z2	AC					
	Three-phase Sensing Module	**Voltage**	**Amps**	**Comments**			
	U 0 to 230 or 400(1)	AC					
	V 0 to 230 or 400(1)	AC					
	W 0 to 230 or 400(1)	AC					
Full Load	**Regulator R448**	**Voltage**	**Amps**	**Comments**			
	E- to E+	AC					
	0 to 230 or 400(1)	AC					
	Self-Excited X1 to X2	AC					
	Permanent Magnet Excited X1 to X2	AC					
	Permanent Magnet Excited X1 to Z2	AC					
	Permanent Magnet Excited X2 to Z2	AC					
	AREP X1 to X2	AC					
	AREP Z1 to Z2	AC					
	Three-phase Sensing Module	**Voltage**	**Amps**	**Comments**			

(continued)

(Table 19, contd)

GENERATOR START-UP CHECKLIST				
	U 0 to 230 or 400[1]	AC		
	V 0 to 230 or 400[1]	AC		
	W 0 to 230 or 400[1]	AC		

[1] This will depend on the configuration of the windings. For more information, refer to the schematic for the generator.

Table 20

GENERATOR START-UP CHECKLIST (CONT.)					
ELECTRICAL			**Yes**	**No**	**Comments**
	Unit properly grounded				
	Check diodes				
	Over current protection				
	Over voltage protection				
	Check for loose wiring				
	Adjust voltage				
	Adjust frequency				
MECHANICAL			**Data**		**Comments**
	Bearing temperature readings at full load		Front _____ Rear _____		
	Stator temperature readings at full load		A0 _____ B0 _____ C0 _____		
	Air gap on main stator		Top _____ Bottom _____		
	Air gap on exciter stator		Top _____ Bottom _____		
	Air gap of PMG		Top _____ Bottom _____		
	Ambient air to generator at full load		Temperature _____		
	Supplier air opening to generator		Size of Opening _____		
SWITCH GEAR/PARALLEL OPERATION					
	Manufacturer:				
		Setting 1	**Setting 2**	**Setting 3**	**Comments**
	Circuit breaker type				
	Overload setting				
	Reverse power relay				
	VAR/PF Controller				
	Load share				
INSTALLATION & LOAD INFORMATION					
	Neutral grounding system		UPS		
	Enclosure type		- Size		
	Motor:		Other loads:		

(continued)

(Table 20, contd)

	- Total SKVA				- Lighting			
	- Total HP				- Computers			
					- Welding			
					- Non-linear			
					- Other			
FULL LOAD DATA								
Voltage	Amps		KW	KVARS	P.F.			

i05083249

Severe Service Application

SMCS Code: 1000

An engine which operates outside of normal conditions is operating in a severe service application.

An engine that operates in a severe service application may need more frequent maintenance intervals in order to maximize the following conditions:

- Reliability
- Service life

The number of individual applications cause the impossibility of identifying all of the factors which may contribute to severe service operation. Consult your Caterpillar dealer for the unique maintenance that may be necessary for your engine.

An application is a severe service application if any of the following conditions apply:

Severe Environmental Factors

- Frequent operation in dirty air
- Frequent operation at an altitude which is above 1525 m (5000 ft)
- Frequent operation in ambient temperatures which are above 32° C (90° F)
- Frequent operation in ambient temperatures which are below 0° C (32° F)

Severe Operating Conditions

- Frequent operation with inlet air which has a corrosive content
- Operation with inlet air which has a combustible content
- Operation which is outside of the intended application
- Operation with a plugged fuel filter
- Extended operation at low idle (more than 20% of hours)
- Frequent cold starts at temperatures below 0° C (32° F)
- Frequent dry starts (starting after more than 72 hours of shutdown)
- Frequent hot shutdowns (shutting down the engine without the minimum of 2 minutes to 5 minutes of cool down time)
- Operation above the engine rated speed
- Operation below the peak torque speed
- Operating with fuel which does not meet the standards for distillate diesel fuel as stated in Special Publication, SEBU6251, “Caterpillar Commercial Diesel Engine Fluids Recommendations” “Distillate Diesel Fuel”
- Operating with fuel which contains greater than 1000 ppm (0.1%) sulfur
- Operating with a blend of distillate fuel which contains more than 5 percent biodiesel

Improper Maintenance Procedures (Maintenance Procedures Which May Contribute to a Severe Service Application)

- Inadequate maintenance of fuel storage tanks from causes such as excessive water, sediment, and microorganism growth.

- Extending maintenance intervals beyond the recommended intervals
- Using fluids which are not recommended in Special Publication, SEBU6251, “Caterpillar Commercial Diesel Engine Fluids Recommendations”
- Extending maintenance intervals for changing the engine oil and engine coolant without S·O·S validation
- Extending maintenance intervals for changing air filters, oil filters, and fuel filters
- Failure to use a water separator
- Using filters which are not recommended by Special Publication, PEWJ0074, “2008 Cat Filter and Fluid Application Guide”
- Storing the engine for more than 3 months but less than 1 yr (For information about engine storage, refer to Special Publication, SEHS9031, “Storage Procedure for Caterpillar Products”)
- Storing the engine for 1 yr to 2 years (For information about engine storage, refer to Special Instruction, REHS5001, “The Long Term Storage and Recovery of Certain Commercial Engines”)

i09693558

Maintenance Interval Schedule

SMCS Code: 1000; 4450; 7500

Ensure that all safety information, warnings, and instructions are read and understood before any operation or any maintenance procedures are performed. The user is responsible for the performance of maintenance, including all adjustments, the use of proper lubricants, fluids, and filters. The user is also responsible for the replacement of components due to normal wear and aging. Failure to adhere to proper maintenance intervals and procedures may result in diminished performance of the product and/or accelerated wear of components. Use fuel consumption, service hours, or calendar time, WHICH EVER OCCURS FIRST, to determine the maintenance intervals. Products that operate in severe operating conditions may require more frequent maintenance. Before each consecutive interval is performed, all maintenance from the previous interval must be performed.

When Required

“ Battery - Recycle“ 101
“ Battery or Battery Cable - Disconnect“ 103
“ Coolant Extender (ELC) - Add“ 108
“ Film (Product Identification) - Clean“ 124
“ Fuel System - Prime“ 125
“ Generator Load - Check“ 132
“ Generator Set - Test“ 133

Every Week

“ Automatic Start/Stop - Inspect“ 101
“ Battery Charger - Check“ 102
“ Battery Electrolyte Level - Check“ 102
“ Coolant Level - Check“ 108
“ Electrical Connections - Check“ 113
“ Engine Air Cleaner Service Indicator - Inspect“ 116
“ Engine Oil Level - Check“ 118
“ Fuel System Primary Filter/Water Separator - Drain“ 127
“ Generator - Inspect“ 130
“ Generator Bearing Temperature - Test/ Record“ 132
“ Jacket Water Heater - Check“ 138
“ Power Factor - Check“ 140
“ Standby Generator Set Maintenance Recommendations“ 142
“ Voltage and Frequency - Check“ 145
“ Walk-Around Inspection“ 145

Every 250 Service Hours

“ Engine Oil and Filter - Change“ 119

Every 6 Months

“ Coolant Sample (Level 1) - Obtain“ 109
“ Generator Lead (Round Cable) - Check“ 132

Every Year

“ Alternator - Inspect“ 101
“ Belts - Inspect/Adjust/Replace“ 103
“ Coolant Sample (Level 2) - Obtain“ 110
“ Cooling System Supplemental Coolant Additive (SCA) - Test/Add“ 111
“ Crankshaft Vibration Damper - Inspect“ 112
“ Engine - Clean“ 113
“ Engine Air Cleaner Element (Dual Element) - Inspect/Clean/Replace“ 114
“ Engine Crankcase Breather - Clean“ 117
“ Engine Mounts - Inspect“ 118
“ Engine Oil Sample - Obtain“ 119
“ Engine Performance - Test“ 121
“ Engine Protective Devices - Check“ 122
“ Fuel System Primary Filter (Water Separator) Element - Replace“ 126
“ Generator Set Vibration - Inspect“ 134
“ Generator Set Vibration - Test/Record“ 135
“ Hoses and Clamps - Inspect/Replace“ 135
“ Radiator - Clean“ 141
“ Rotating Rectifier - Check“ 142
“ Starting Motor - Inspect“ 143
“ Stator Lead - Check“ 143
“ Varistor - Check“ 144
“ Varistor - Inspect“ 144

“ Water Pump - Inspect“. 146

Every 3 Years

“ Coolant (DEAC) - Change“ 105
“ Coolant (ELC) - Change“. 107
“ Coolant Temperature Regulator - Replace“ 111
“ Turbocharger - Inspect“. 143

Overhaul

“ Overhaul Considerations“ 138
“ Generator Bearing - Replace“. 131

Commissioning

“ Generator Set Alignment - Check“ 134

i08259468

Alternator - Inspect

SMCS Code: 1405-040

Caterpillar recommends a scheduled inspection of the alternator. Inspect the alternator for loose connections and proper battery charging. Inspect the ammeter (if equipped) during engine operation to ensure proper battery performance and/or proper performance of the electrical system. Make repairs, as required.

Check the alternator and the battery charger for proper operation. If the batteries are properly charged, the ammeter reading should be very near zero. All batteries should be kept charged. The batteries should be kept warm because temperature affects the cranking power. If the battery is too cold, the battery will not crank the engine. The battery will not crank the engine, even if the engine is warm. When the engine is not run for long periods of time or if the engine is run for short periods, the batteries may not fully charge. A battery with a low charge will freeze more easily than a battery with a full charge.

i08259470

Automatic Start/Stop - Inspect

SMCS Code: 4462

The generator set must be ready to operate under a load at any time. After performing maintenance on the generator set, inspect the position of the control switches. Ensure the following conditions:

- The starting system is enabled.
- The control switches are in the correct position for automatic starting.
- The switchgear and the automatic transfer switches that are associated with the generator are enabled.

i08397621

Battery - Recycle

SMCS Code: 1401-561; 1401-535; 1401; 1401-510; 1401-005

Always recycle a battery. Never discard a battery. Return used batteries to one of the following locations:

- A battery supplier
- An authorized battery collection facility
- A recycling facility

i08397624

Battery - Replace

SMCS Code: 1401-510

WARNING

Batteries give off combustible gases which can explode. A spark can cause the combustible gases to ignite. This can result in severe personal injury or death.

Ensure proper ventilation for batteries that are in an enclosure. Follow the proper procedures in order to help prevent electrical arcs and/or sparks near batteries. Do not smoke when batteries are serviced.

WARNING

The battery cables or the batteries should not be removed with the battery cover in place. The battery cover should be removed before any servicing is attempted.

Removing the battery cables or the batteries with the cover in place may cause a battery explosion resulting in personal injury.

Note: Always recycle a battery. Never discard a battery. Return used batteries to an appropriate recycling facility.

1. Turn the key start switch to the OFF position. Remove the key and all electrical loads.
2. Turn OFF the battery charger. Disconnect the charger.
3. Turn battery isolator switch to OFF position.
4. The NEGATIVE “-” cable connects the NEGATIVE “-” battery terminal to the ground plane. Disconnect the cable from the NEGATIVE “-” battery terminal.
5. The POSITIVE “+” cable connects the POSITIVE “+” battery terminal to the starting motor. Disconnect the cable from the POSITIVE “+” battery terminal.

Note: Always recycle a battery. Never discard a battery. Return used batteries to an appropriate recycling facility.

6. Remove the used battery.
7. Install the new battery.

Note: Before the cables are connected, ensure that the key start switch is OFF.

8. Connect the cable from the starting motor to the POSITIVE “+” battery terminal.
9. Connect the cable from the ground plane to the NEGATIVE “-” battery terminal.

i08230703

Battery Charger - Check

SMCS Code: 1401-535

Checking Before Start-Up

Check the battery charger for proper operation. If the batteries are properly charged, the needle of the ammeter will register near “0” (zero).

The battery charger must not produce excessive current during start-up. Alternatively, the charger must be automatically disconnected for start-up. If the engine has an alternator, the charger must be automatically disconnected during start-up and during engine operation.

Charging the Battery

WARNING

Never disconnect any charging unit circuit or battery circuit cable from the battery when the charging unit is operated. A spark can cause an explosion from the flammable vapor mixture of hydrogen and oxygen that is released from the electrolyte through the battery outlets. Injury to personnel can be the result.

Perform the following procedure to charge the battery:

1. Ensure that the charger is turned OFF.
2. Adjust the voltage of the charger to match the voltage of the battery.
3. Connect the POSITIVE “+” lead of the charger to the POSITIVE “+” battery terminal. Connect the NEGATIVE “-” lead of the charger to the NEGATIVE “-” battery terminal.
4. Turn ON the battery charger.

Overcharging of Batteries

Overcharging reduces the service life of batteries. Use a battery charger that will not overcharge the battery. DO NOT charge the battery if the meter of the battery charger is in the RED zone.

Overcharging is indicated by the following symptoms:

- The battery is warm to the touch.
- A strong odor of acid is present.
- The battery emits smoke or a dense vapor (gas).

Perform one of the following procedures if the battery shows symptoms of overcharging:

- Reduce the rate of charging by a significant amount. Complete the charging at the reduced rate.
- Turn OFF the charger.

Table 21 describes the effects of overcharging on different types of batteries.

Table 21

Effects of Overcharging Batteries	
Type of Battery	**Effect**
Cat General Service Batteries Cat Premium High Output Batteries	All battery cells have a low level of electrolyte.
	When the plates of the battery are inspected through the filler holes, the plates may appear to be warped. This condition can be caused by excessive temperature.
	The battery may not pass a load test.
Cat Maintenance Free Batteries	The battery may not accept a charging current.
	The battery may not pass a load test.

Checking After Stopping

Ensure that the battery charger is connected properly. Observe the meter of the charger. Record the amperage.

i08642360

Battery Electrolyte Level - Check

SMCS Code: 1401-535-FLV

When the engine is not run for long periods of time or when the engine is run for short periods, the batteries may not fully recharge. Ensure a full charge to help prevent the battery from freezing. If batteries are properly charged, ammeter reading should be very near zero, when the engine is in operation.

WARNING

All lead-acid batteries contain sulfuric acid which can burn the skin and clothing. Always wear a face shield and protective clothing when working on or near batteries.

1. Remove the filler caps. Maintain the electrolyte level to the “FULL” mark on the battery.

   If the addition of water is necessary, use distilled water. If distilled water is not available, use clean water that is low in minerals. Do not use artificially softened water.

2. Check the condition of the electrolyte with the 245-5829 Coolant Battery Tester Refractometer.

3. Keep the batteries clean.

   Clean the battery case with one of the following cleaning solutions:

   - Use a solution of 0.1 kg (0.2 lb) baking soda and 1 L (1 qt) of clean water.
   - Use a solution of Ammonium Hydroxide.

   Thoroughly rinse the battery case with clean water.

   Use a fine grade of sandpaper to clean the terminals and the cable clamps. Clean the items until the surfaces are bright or shiny. DO NOT remove material excessively. Excessive removal of material can cause the clamps not to fit properly. Coat the clamps and the terminals with 5N-5561 Silicone Lubricant, petroleum jelly or MPGM.

i08357764

Battery or Battery Cable - Disconnect

SMCS Code: 1401; 1402-029

WARNING

The battery cables or the batteries should not be removed with the battery cover in place. The battery cover should be removed before any servicing is attempted.

Removing the battery cables or the batteries with the cover in place may cause a battery explosion resulting in personal injury.

1. Turn the start switch to the OFF position. Turn the ignition switch (if equipped) to the OFF position and remove the key and all electrical loads.

2. Disconnect the negative battery terminal at the battery that goes to the start switch. Ensure that the cable cannot contact the terminal. When four 12 volt batteries are involved, the negative side of two batteries must be disconnected.

3. Tape the leads to help prevent accidental starting.

4. Proceed with necessary system repairs. Reverse the steps to reconnect all cables.

i02229322

Belts - Inspect/Adjust/Replace

SMCS Code: 1357-025; 1357-040; 1357-510

Inspection

Inspect the alternator belt and any accessory belts for wear and for cracking. Replace the belts if the belts are not in good condition.

Check the belt tension according to the information in the Service Manual, “Specifications”.

Slippage of loose belts can reduce the efficiency of the driven components. Vibration of loose belts can cause unnecessary wear on the following components:

- Belts
- Pulleys
- Bearings

If the belts are too tight, unnecessary stress is placed on the components. This reduces the service life of the components.

Replacement

For applications that require multiple drive belts, replace the drive belts in matched sets. Replacing one drive belt of a matched set will cause the new drive belt to carry more load because the older drive belts are stretched. The additional load on the new drive belt could cause the new drive belt to fail.

Alternator Belt Adjustment

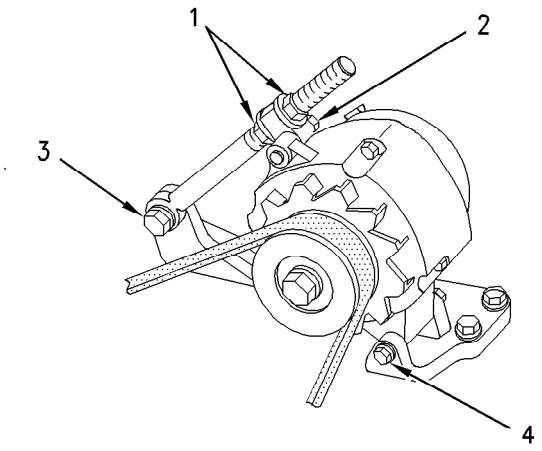

Illustration 56 g00960176

(1) Adjusting nuts
(2) Mounting bolt
(3) Mounting bolt
(4) Mounting bolt

1. Remove the drive belt guard.

2. Loosen mounting bolts (2), (3), and (4). Loosen adjusting nuts (1).

3. Turn adjusting nuts (1) in order to increase or decrease the drive belt tension.

4. Tighten adjusting nuts (1). Tighten mounting bolts (2), (3), and (4).

5. Reinstall the drive belt guard.

If new drive belts are installed, check the drive belt tension again after 30 minutes of engine operation at the rated rpm.

i07622832

Belts - Inspect/Adjust/Replace

SMCS Code: 1357-025; 1357-040; 1357-510

Inspect

Belt tension should be checked initially between the first 20 to 40 hours of engine operation.

After the initial check, the belt tension should be checked at every oil change.

To maximize the engine performance, inspect the belts for wear and for cracking. Replace belts that are worn or damaged.

For applications that require multiple drive belts, replace the belts in matched sets. Replacing only one belt of a matched set will cause the new belt to carry more load because the older belt is stretched. The additional load on the new belt could cause the new belt to break.

If the belts are too loose, vibration causes unnecessary wear on the belts and pulleys. Loose belts may slip enough to cause overheating.

If the belts are too tight, unnecessary stresses are placed on the pulley bearings and on the belts. Unnecessary stress may shorten the service life of the components.

Remove the belt guard, if equipped. Inspect the condition and adjustment of the alternator belts and accessory drive belts (if equipped).

If the belt does not require replacement or adjustment, install the belt guard. If the belt requires adjustment or replacement, follow the procedure below.

Replace (Serpentine Belt)

The tension on the serpentine belt may not be adjusted.

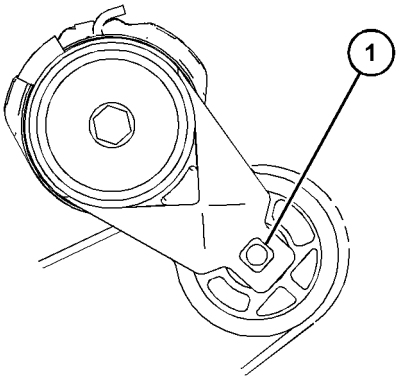

Illustration 57 g06381763

Typical example

(1) Square hole

1. Remove the front cover.
2. Insert a ratchet with a square drive into the square hole (1) that is located in the tensioner for the fan drive belt. Rotate the tensioner clockwise to relieve tension on the fan drive belt. Remove the fan drive belt.
3. Then insert a ratchet with a square drive into the square hole that is located in the tensioner for the alternator belt.
4. Rotate the tensioner counterclockwise to relieve tension on the alternator belt. Remove the alternator belt.
5. Install the new belt correctly, as shown. Be sure that the belt is fully seated on the pulleys. The correct tension will automatically be applied when the ratchet is removed.
6. Replace the front cover.

i05821498

Coolant (DEAC) - Change

SMCS Code: 1350-070; 1395-044

Clean the cooling system and flush the cooling system before the recommended maintenance interval if the following conditions exist:

- The engine overheats frequently.
- Foaming is observed.
- The oil has entered the cooling system and the coolant is contaminated.
- The fuel has entered the cooling system and the coolant is contaminated.

NOTICE

Use of commercially available cooling system cleaners may cause damage to cooling system components. Use only cooling system cleaners that are approved for Caterpillar engines.

Note: Inspect the water pump and the water temperature regulator after the cooling system has been drained. This is a good opportunity to replace the water pump, the water temperature regulator, and the hoses, if necessary.

Drain

WARNING

Pressurized System: Hot coolant can cause serious burns. To open the cooling system filler cap, stop the engine and wait until the cooling system components are cool. Loosen the cooling system pressure cap slowly in order to relieve the pressure.

1. Stop the engine and allow the engine to cool. Loosen the cooling system filler cap slowly in order to relieve any pressure. Remove the cooling system filler cap.
2. Open the cooling system drain valve (if equipped). If the cooling system is not equipped with a drain valve, remove one of the drain plugs.

Note: If equipped, be sure to drain the heater and any related supply and return lines.

Allow the coolant to drain.

NOTICE

Dispose of used engine coolant properly or recycle. Various methods have been proposed to reclaim used coolant for reuse in engine cooling systems. The full distillation procedure is the only method acceptable by Caterpillar to reclaim the used coolant.

For information regarding the disposal and the recycling of used coolant, consult your Caterpillar dealer or consult Caterpillar Dealer Service Tool Group:

Outside Illinois 1-800-542-TOOL
Inside Illinois 1-800-541-TOOL
Canada 1-800-523-TOOL

Flush

1. Flush the cooling system with clean water in order to remove any debris.

2. Close the drain valve (if equipped). Clean the drain plugs. Install the drain plugs. Refer to the Specifications Manual, SENR3130, “Torque Specifications” for more information on the proper torques.

NOTICE
Fill the cooling system no faster than 19 L (5 US gal) per minute to avoid air locks.

3. Fill the cooling system with a mixture of clean water and Caterpillar Fast Acting Cooling System Cleaner. Add 0.5 L (1 pint) of cleaner per 15 L (4 US gal) of the cooling system capacity. Install the cooling system filler cap.

4. Start and run the engine at low idle for a minimum of 30 minutes. The coolant temperature should be at least 82 °C (180 °F).

NOTICE
Improper or incomplete rinsing of the cooling system can result in damage to copper and other metal components.

To avoid damage to the cooling system, make sure to completely flush the cooling system with clear water. Continue to flush the system until all signs of the cleaning agent are gone.

5. Stop the engine and allow the engine to cool. Loosen the cooling system filler cap slowly in order to relieve any pressure. Remove the cooling system filler cap. Open the drain valve (if equipped) or remove the cooling system drain plugs. Allow the water to drain. Flush the cooling system with clean water. If equipped, be sure to flush the heater and any related supply and return lines. Close the drain valve (if equipped). Clean the drain plugs. Install the drain plugs. Refer to the Specifications Manual, SENR3130, “Torque Specifications” for more information on the proper torques.

Cooling Systems with Heavy Deposits or Plugging

Note: For the following procedure to be effective, there must be some active flow through the cooling system components.

1. Flush the cooling system with clean water in order to remove any debris.

Note: If equipped, be sure to flush the heater and any related supply and return lines.

2. Close the drain valve (if equipped). Clean the drain plugs. Install the drain plugs. Refer to the Specifications Manual, SENR3130, “Torque Specifications” for more information on the proper torques.

NOTICE
Fill the cooling system no faster than 19 L (5 US gal) per minute to avoid air locks.

3. Fill the cooling system with a mixture of clean water and Caterpillar Fast Acting Cooling System Cleaner. Add 0.5 L (1 pint) of cleaner per 3.8 to 7.6 L (1 to 2 US gal) of the cooling system capacity. Install the cooling system filler cap.

4. Start and run the engine at low idle for a minimum of 90 minutes. The coolant temperature should be at least 82 °C (180 °F).

NOTICE
Improper or incomplete rinsing of the cooling system can result in damage to copper and other metal components.

To avoid damage to the cooling system, make sure to completely flush the cooling system with clear water. Continue to flush the system until all signs of the cleaning agent are gone.

5. Stop the engine and allow the engine to cool. Loosen the cooling system filler cap slowly in order to relieve any pressure. Remove the cooling system filler cap. Open the drain valve (if equipped) or remove the cooling system drain plugs. Allow the water to drain. Flush the cooling system with clean water. Close the drain valve (if equipped). Clean the drain plugs. Install the drain plugs. Refer to the Specifications Manual, SENR3130, “Torque Specifications” for more information on the proper torques.

Fill

NOTICE
Fill the cooling system no faster than 19 L (5 US gal) per minute to avoid air locks.

1. Remove the top cooling system tank cap.

2. Connect field service pump hose to coolant drain valve.

3. Open drain valve.

4. Prime pump per OEM instructions.

5. Add Cat ELC Extender according to the requirements for the cooling system capacity. Refer to this Operation and Maintenance Manual, “Refill Capacities” for the coolant capacity.
6. Stop pump, close drain valve, and remove pump hoses.
7. Reinstall radiator cap.

i05849166

Coolant (ELC) - Change

SMCS Code: 1350-070; 1395-044

Clean the cooling system and flush the cooling system before the recommended maintenance interval if the following conditions exist:

- The engine overheats frequently.
- Foaming is observed.
- The oil has entered the cooling system and the coolant is contaminated.
- The fuel has entered the cooling system and the coolant is contaminated.

Note: When the cooling system is cleaned, only clean water is needed when the ELC is drained and replaced.

Note: Inspect the water pump and the water temperature regulator after the cooling system has been drained.

Drain

WARNING

Pressurized System: Hot coolant can cause serious burns. To open the cooling system filler cap, stop the engine and wait until the cooling system components are cool. Loosen the cooling system pressure cap slowly in order to relieve the pressure.

1. Stop the engine and allow the engine to cool. Loosen the cooling system filler cap slowly in order to relieve any pressure. Remove the cooling system filler cap.
2. Open the cooling system drain valve (if equipped). If the cooling system is not equipped with a drain valve, remove the cooling system drain plugs.

   Allow the coolant to drain.

NOTICE
Dispose of used engine coolant properly or recycle. Various methods have been proposed to reclaim used coolant for reuse in engine cooling systems. The full distillation procedure is the only method acceptable by Caterpillar to reclaim the used coolant.

For information regarding the disposal and the recycling of used coolant, consult your Caterpillar dealer or consult Caterpillar Dealer Service Tool Group:

InsideUSA 1-800-542-TOOL
Inside Illinois 1-800-541-TOOL
Canada 1-800-523-TOOL
International1-309-578-7372

Flush

1. Flush the cooling system with clean water in order to remove any debris.
2. Close the drain valve (if equipped). Clean the drain plugs. Install the drain plugs. Refer to the Specifications Manual, SENR3130, “Torque Specifications” for more information on the proper torques.

NOTICE
Fill the cooling system no faster than 19 L (5 US gal) per minute to avoid air locks.

3. Fill the cooling system with clean water. Install the cooling system filler cap.
4. Start and run the engine at low idle until the temperature reaches 49 to 66 °C (120 to 150 °F).
5. Stop the engine and allow the engine to cool. Loosen the cooling system filler cap slowly in order to relieve any pressure. Remove the cooling system filler cap. Open the drain valve (if equipped) or remove the cooling system drain plugs. Allow the water to drain. Flush the cooling system with clean water. Close the drain valve (if equipped). Clean the drain plugs. Install the drain plugs. Refer to the Specifications Manual, SENR3130, “Torque Specifications” for more information on the proper torques.

Fill

NOTICE
Fill the cooling system no faster than 19 L (5 US gal) per minute to avoid air locks.

1. Remove the top cooling system tank cap.

2. Connect field service pump hose to coolant drain valve.
3. Open drain valve.
4. Prime pump per OEM instructions.
5. Add Cat ELC Extender according to the requirements for the cooling system capacity. Refer to this Operation and Maintenance Manual, “Refill Capacities” for the coolant capacity.
6. Stop pump, close drain valve, and remove pump hoses.
7. Reinstall radiator cap.

i05465968

Coolant Extender (ELC) - Add

SMCS Code: 1352-544-NL

Note: Refer to this Operation and Maintenance Manual, “Fluid Recommendations” (Cooling System) for the maintenance interval for the addition of the coolant extender.

Cat ELC (Extended Life Coolant) and Cat ELI (Extended Life Inhibitor) do not require the frequent additions of any supplemental cooling additives. The Cat ELC Extender will only be added one time.

Note: Do not use conventional supplemental coolant additive (SCA) with Cat ELC or with Cat ELI.

Check the cooling system only when the engine is stopped and cool.

WARNING

Personal injury can result from hot coolant, steam and alkali.

At operating temperature, engine coolant is hot and under pressure. The radiator and all lines to heaters or the engine contain hot coolant or steam. Any contact can cause severe burns.

Remove cooling system pressure cap slowly to relieve pressure only when engine is stopped and cooling system pressure cap is cool enough to touch with your bare hand.

Do not attempt to tighten hose connections when the coolant is hot, the hose can come off causing burns.

Cooling System Coolant Additive contains alkali. Avoid contact with skin and eyes.

NOTICE

Care must be taken to ensure that fluids are contained during performance of inspection, maintenance, testing, adjusting, and repair of the product. Be prepared to collect the fluid with suitable containers before opening any compartment or disassembling any component containing fluids.

Refer to Special Publication, NENG2500, “Cat Dealer Service Tool Catalog” or refer to Special Publication, PECJ0003, “Cat Shop Supplies and Tools Catalog” for tools and supplies suitable to collect and contain fluids on Cat products.

Dispose of all fluids according to local regulations and mandates.

1. Remove the top cooling system tank cap.
2. Connect field service pump hose to coolant drain valve.
3. Open drain valve.
4. Prime pump per OEM instructions.
5. Add Cat ELC Extender according to the requirements for the cooling system capacity. Refer to this Operation and Maintenance Manual, “Refill Capacities” for the coolant capacity.
6. Stop pump, close drain valve, and remove pump hoses.
7. Reinstall radiator cap.

For further information, refer to this Operation and Maintenance Manual, “Fluid Recommendations”.

i08397612

Coolant Level - Check

SMCS Code: 1395-082

Check the coolant level when the engine is stopped and cool.

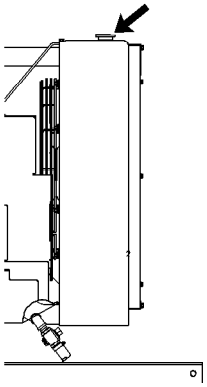

Illustration 58 g00285520
Cooling system filler cap

WARNING

Pressurized System: Hot coolant can cause serious burns. To open the cooling system filler cap, stop the engine and wait until the cooling system components are cool. Loosen the cooling system pressure cap slowly in order to relieve the pressure.

1. Remove the cooling system filler cap slowly in order to relieve pressure.
2. Maintain the coolant level within 13 mm (0.5 inch) of the bottom of the filler pipe. If the engine is equipped with a sight glass, maintain the coolant level to the proper level in the sight glass.

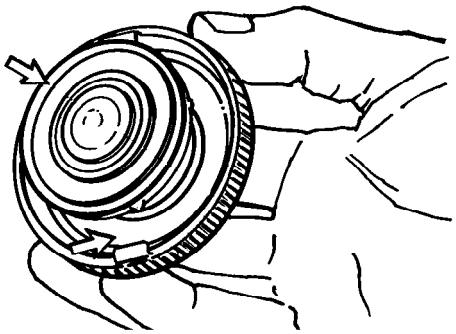

Illustration 59 g00103639
Typical filler cap gaskets

3. Clean the cooling system filler cap and check the condition of the filler cap gaskets. Replace the cooling system filler cap if the filler cap gaskets are damaged. Reinstall the cooling system filler cap.
4. Inspect the cooling system for leaks.

i08254010

Coolant Sample (Level 1) - Obtain

SMCS Code: 1350-008; 1395-554; 1395-008; 7542

Testing the engine coolant is important to ensure that the engine is protected from internal cavitation and corrosion. The analysis also tests the ability of the coolant to protect the engine from boiling and freezing. S·O·S Systems Coolant Analysis can be done at your Cat dealer. Cat S·O·S coolant analysis is the best way to monitor the condition of your coolant and your cooling system. S·O·S coolant analysis is a program that is based on periodic samples.

Note: Obtaining a Coolant Sample (Level 1) is optional if the cooling system is filled with one of the following coolants: Cat ELC (Extended Life Coolant)., Cat ELI (Extended Life Inhibitor) and Conventional Heavy-Duty Coolant.

Note: Obtain a Coolant Sample (Level 1) if the cooling system is filled with any of the following coolants: Cat DEAC, Cat SCA, and Conventional Heavy-Duty Coolants.

For additional information about coolant analysis and about other coolants, see this Operation and Maintenance Manual, “Fluid Recommendations” or consult your Cat dealer.

Sampling Conditions

If the engine is equipped with a sampling port, the engine should be running at operating temperature when the sample is obtained.

If the engine is not equipped with a sampling port, the coolant should be warm.

Use the following guidelines for proper sampling of the coolant:

- Complete the information on the label for the sampling bottle before you begin to take the samples.
- Keep the unused sampling bottles stored in plastic bags.
- Obtain coolant samples directly from the coolant sample port. You should not obtain the samples from any other location.
- Keep the lids on empty sampling bottles until you are ready to collect the sample.
- Place the sample in the mailing tube immediately after obtaining the sample to avoid contamination.
- Never collect samples from expansion bottles.

- Never collect samples from the drain for a system.

Timing of the Sampling

Table 22

Recommended Interval		
Type of Coolant	**Level 1**	**Level 2**
Cat DEAC Cat SCA Conventional Heavy-Duty Coolants	Every 250 hours	Yearly(1)
Cat ELC Cat ELI Commercial EC-1 Coolants	Optional(1)	Yearly(1)

(1) The Level 2 Coolant Analysis should be performed sooner if a problem is suspected or identified.

Note: Check the SCA (Supplemental Coolant Additive) of the conventional coolant at every oil change or at every 250 hours. Perform this check at the interval that occurs first.

Obtain the sample of the coolant as close as possible to the recommended sampling interval. To receive the full effect of S·O·S analysis, establish a consistent trend of data. To establish a pertinent history of data, perform consistent samplings that are evenly spaced. Supplies for collecting samples can be obtained from your Cat dealer.

NOTICE
Always use a designated pump for oil sampling, and use a separate designated pump for coolant sampling. Using the same pump for both types of samples may contaminate the samples that are being drawn. This contaminate may cause a false analysis and an incorrect interpretation that could lead to concerns by both dealers and customers.

Submit the sample for Level 1 analysis.

Note: Level 1 results may indicate a need for Level 2 Analysis.

i08397652

Coolant Sample (Level 2) - Obtain

SMCS Code: 1350-008; 1395-008; 1395-554; 7542

NOTICE
Always use a designated pump for oil sampling, and use a separate designated pump for coolant sampling. Using the same pump for both types of samples may contaminate the samples that are being drawn. This contaminate may cause a false analysis and an incorrect interpretation that could lead to concerns by both dealers and customers.

NOTICE
Care must be taken to ensure that fluids are contained during performance of inspection, maintenance, testing, adjusting, and repair of the product. Be prepared to collect the fluid with suitable containers before opening any compartment or disassembling any component containing fluids.

Refer to Special Publication, NENG2500, “Cat Dealer Service Tool Catalog” or refer to Special Publication, PECJ0003, “Cat Shop Supplies and Tools Catalog” for tools and supplies suitable to collect and contain fluids on Cat products.

Dispose of all fluids according to local regulations and mandates.

Refer to Operation and Maintenance Manual, “Cooling System Coolant Sample (Level 1) - Obtain” for the guidelines for a proper sampling of the coolant.

Submit the sample for Level 2 analysis.

For additional information about coolant analysis, see Special Publication, SEBU7003, “Cat 3600 Series and C280 Series Diesel Engine Fluids Recommendations” or consult your Cat dealer.

i08397639

Coolant Temperature Regulator - Replace

SMCS Code: 1355-510

Replace the water temperature regulator before the water temperature regulator fails. Replacing the water temperature regulator is a recommended preventive maintenance practice. Replacing the water temperature regulator reduces the chances for unscheduled downtime. Refer to this Operation and Maintenance Manual, “Maintenance Interval Schedule” for the proper maintenance interval.

A water temperature regulator that fails in a partially opened position can cause overheating or overcooling of the engine.

A water temperature regulator that fails in the closed position can cause excessive overheating. Excessive overheating could result in cracking of the cylinder head or piston seizure problems.

A water temperature regulator that fails in the open position will cause the engine operating temperature to be too low during partial load operation. Low engine operating temperatures during partial loads could cause an excessive carbon buildup inside the cylinders. This excessive carbon buildup could result in an accelerated wear of the piston rings and wear of the cylinder liner.

NOTICE
Failure to replace your water temperature regulator on a regularly scheduled basis could cause severe engine damage.

Cat engines incorporate a shunt bypass design cooling system and require operating the engine with a water temperature regulator installed.

If the water temperature regulator is installed incorrectly, the engine may overheat, causing cylinder head damage. Ensure that the new water temperature regulator is installed in the original position. Ensure that the water temperature regulator vent hole is open.

Do not use liquid gasket material on the gasket or cylinder head surface.

Refer to two articles in the Disassembly and Assembly Manual, “Water Temperature Regulators - Remove and Water Temperature Regulators - Install” for the replacement procedure of the water temperature regulator, or consult your Caterpillar dealer.

Note: If the water temperature regulators are replaced, drain the coolant from the cooling system to a level that is below the water temperature regulator housing.

i08397656

Cooling System Supplemental Coolant Additive (SCA) - Test/ Add

SMCS Code: 1352-045; 1395-081

WARNING

Cooling system coolant additive contains alkali. To help prevent personal injury, avoid contact with the skin and eyes. Do not drink cooling system coolant additive.

NOTICE
Excessive supplemental coolant additive concentration can form deposits on the higher temperature surfaces of the cooling system, reducing the engine's heat transfer characteristics. Reduced heat transfer could cause cracking of the cylinder head and other high temperature components.

Excessive supplemental coolant additive concentration could also result in blockage of the heat exchanger, overheating, and/or accelerated wear of the water pump seal.

Do not exceed the recommended amount of supplemental coolant additive concentration.

This maintenance procedure is required for conventional coolants such as DEAC.**Do not perform this maintenance for cooling systems that are filled with Cat Extended Life Coolant (Cat ELC) or Cat Extended Life Inhibitor (Cat ELI).**

Note: Caterpillar recommends an S·O·S coolant analysis (Level 1).

NOTICE
Do NOT mix brands or types of SCA. Do NOT mix SCAs and extenders.

Failure to follow the recommendations can result in shortened cooling system component life.

NOTICE
Use Only Approved SCAs. Conventional coolants require the maintenance addition of SCA throughout their expected life. Do NOT use an SCA with a coolant unless specifically approved by the coolant supplier for use with their coolant. It is the responsibility of the coolant manufacturer to ensure compatibility and acceptable performance.

Failure to follow the recommendations can result in shortened cooling system component life.

NOTICE
Care must be taken to ensure that fluids are contained during performance of inspection, maintenance, testing, adjusting, and repair of the product. Be prepared to collect the fluid with suitable containers before opening any compartment or disassembling any component containing fluids.

Refer to Special Publication, NENG2500, “Cat Dealer Service Tool Catalog” and to Special Publication, GECJ0003, “Cat Shop Supplies and Tools” for tools and supplies suitable to collect and contain fluids on Cat products.

Dispose of all fluids according to applicable regulations and mandates.

Note: Caterpillar recommends that an S·O·S Coolant Analysis (Level 1) is performed to check the concentration of SCA.

Maintain the Proper Concentration of SCA in the Coolant

WARNING

Pressurized System: Hot coolant can cause serious burns. To open the cooling system filler cap, stop the engine and wait until the cooling system components are cool. Loosen the cooling system pressure cap slowly in order to relieve the pressure.

1. Remove the cooling system filler cap slowly.
2. Test the concentration of the SCA with a 286-2578 Nitrite Test Strip or review the results of the S·O·S Coolant Analysis (Level 1).
3. If necessary, drain some coolant to allow space for the addition of the SCA.
4. Add the amount of SCA required to maintain a concentration of 3 percent to 6 percent SCA in the coolant.
5. Clean the cooling system filler cap. Install the cooling system filler cap.

For further information, refer to Special Publication, SEBU6251, “Cat Commercial Diesel Engine Fluids Recommendations”.

For information on Cat coolant conditioner for aluminum components, refer to Special Instruction, REHS7296, “Instructions for Use of Cat Coolant Conditioner for Aluminum Components”.

i06103521

Crankshaft Vibration Damper - Inspect

SMCS Code: 1205-040

Damage to the crankshaft vibration damper or failure of the crankshaft vibration damper can increase torsional vibrations. The vibrations can damage the crankshaft and other engine components. A deteriorating damper can cause excessive gear train noise at variable points in the speed range.

The damper is mounted to the crankshaft which is located behind the belt guard on the front of the engine.

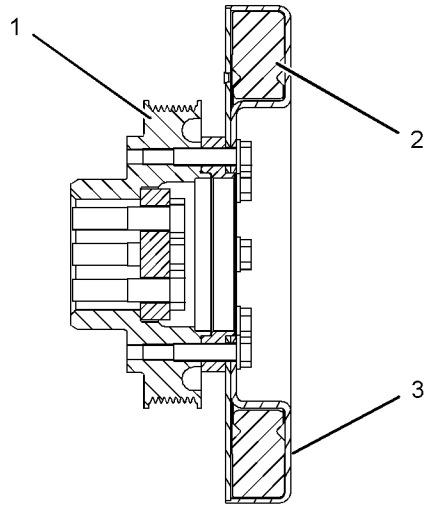

Illustration 60 g01134779
Viscous vibration damper
Typical example
(1) Crankshaft pulley
(2) Weight
(3) Case

Inspection

Inspect the damper for the following conditions:

- The damper is dented, cracked, or fluid is leaking from the damper.
- The paint on the damper is discolored from excessive heat.
- The damper is bent.

- The bolt holes are worn or there is a loose fit for the bolts.
- The engine has had a crankshaft failure due to torsional forces.
- Extreme wear of the gear train.

Replace the damper if any of these conditions exist.

Removal and Installation

Refer to this Operation and Maintenance Manual, “Belts - Inspect/Adjust/Replace” for information on removing and on installing the belt. Refer to the Disassembly and Assembly Manual, “Vibration Damper and Pulley - Remove and Install” for information on removing and installing the damper.

i07682906

Electrical Connections - Check

SMCS Code: 4459-535

DANGER

DANGER: Shock/Electrocution Hazard-Do not operate this equipment or work on this equipment unless you have read and understand the instructions and warnings in the Operation and Maintenance Manual. Failure to follow the instructions or heed the warnings will result in serious injury or death.

Checking the electrical connections is an important part of the maintenance for the generator set. Improper connections may cause the generator set to malfunction.

Check all exposed electrical connections for tightness.

Check the following devices for loose mounting or for physical damage:

- Transformers
- Fuses
- Capacitors
- Lightning arresters

Check the connections for the following components:

- Load cables
- Cables for the generator
- Potential transformers
- Current transformers

Check all lead wires and electrical connections for proper clearance. Inspect all cables for chafing, abrasion, and corrosion. Repair any damaged wires prior to use.

i08246334

Engine - Clean

SMCS Code: 1000-070

WARNING

Personal injury or death can result from high voltage.

Moisture could create paths of electrical conductivity.

Make sure the unit is off line (disconnected from utility and/or other generators), locked out and tagged "Do Not Operate".

NOTICE
Water or condensation can cause damage to generator components. Protect all electrical components from exposure to water.

NOTICE
Accumulated grease and oil on an engine is a fire hazard. Keep the engine clean. Remove debris and fluid spills whenever a significant quantity accumulates on the engine.

Steam cleaning the engine will remove accumulated oil and grease. A clean engine provides the following benefits:

- Easy detection of fluid leaks
- Maximum heat transfer characteristics
- Ease of maintenance

Note: For more information on cleaning and drying electric generators, refer to Special Instruction, SEHS9124, “Cleaning and Drying of Electric Set Generators”.

i07907211

Engine Air Cleaner Element (Dual Element) - Inspect/Clean/Replace
(If Equipped)

SMCS Code: 1051; 1054-510; 1054-070; 1054-040

NOTICE
Never run the engine without an air cleaner element installed. Never run the engine with a damaged air cleaner element. Do not use air cleaner elements with damaged pleats, gaskets or seals. Dirt entering the engine causes premature wear and damage to engine components. Air cleaner elements help to prevent airborne debris from entering the air inlet.

NOTICE
Never service the air cleaner element with the engine running since this will allow dirt to enter the engine.

Servicing the Air Cleaner Elements

If the air cleaner element becomes plugged, the air can split the material of the air cleaner element. Unfiltered air will drastically accelerate internal engine wear. Your Caterpillar dealer has the proper air cleaner elements for your application. Consult your Caterpillar dealer for the correct air cleaner element.

- Check the precleaner (if equipped) daily for accumulation of dirt and debris. Remove any dirt and debris, as needed.
- Operating conditions (dust, dirt, and debris) may require more frequent service of the air cleaner element.
- The air cleaner element may be cleaned up to six times if the element has been properly cleaned and inspected.
- The air cleaner element should be replaced at least one time per year. This replacement should be performed regardless of the number of cleanings.

Replace the dirty paper air cleaner elements with clean air cleaner elements. Before installation, check the air cleaner elements thoroughly for tears and/or holes in the filter material. Inspect the gasket or the seal of the air cleaner element for damage. Maintain a supply of suitable air cleaner elements for replacement purposes.

Cleaning the Primary Air Cleaner Elements

NOTICE
Caterpillar recommends certified air filter cleaning services that are available at Cat dealers. The Cat cleaning process uses proven procedures to assure consistent quality and sufficient filter life.

Observe the following guidelines if you attempt to clean the filter element:

Do not tap or strike the filter element in order to remove dust.

Do not wash the filter element.

Use low pressure compressed air in order to remove the dust from the filter element. Air pressure must not exceed 207 kPa (30 psi). Direct the air flow up the pleats and down the pleats from the inside of the filter element. Take extreme care in order to avoid damage to the pleats.

Do not use air filters with damaged pleats, gaskets, or seals. Dirt entering the engine will cause damage to engine components.

The primary air cleaner element can be used up to six times if the element has been properly cleaned and inspected. When the primary air cleaner element is cleaned, check for rips or tears in the filter material. The primary air cleaner element should be replaced at least one time per year. This replacement should be performed regardless of the number of cleanings.

Use clean primary air cleaner elements while dirty elements are being cleaned.

NOTICE
Do not clean the air cleaner elements by bumping or tapping. This could damage the seals. Do not use elements with damaged pleats, gaskets or seals. Damaged elements will allow dirt to pass through. Engine damage could result.

Visually inspect the primary air cleaner elements before cleaning. Inspect the air cleaner elements for damage to the seal, the gaskets, and the outer cover. Discard any damaged air cleaner elements.

There are two common methods that are used to clean primary air cleaner elements:

- Pressurized air

- Vacuum cleaning

Pressurized Air

Pressurized air can be used to clean primary air cleaner elements that have not been cleaned more than two times. Pressurized air will not remove deposits of carbon and oil. Use filtered, dry air with a maximum pressure of 207 kPa (30 psi).

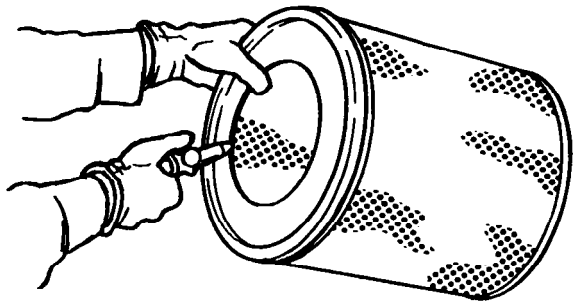

Illustration 61 g00281692

Note: When the primary air cleaner elements are cleaned, always begin with the clean side (inside) in order to force dirt particles toward the dirty side (outside).

Aim the hose so that the air flows inside the element along the length of the filter to prevent damage to the paper pleats. Do not aim the stream of air directly at the primary air cleaner element. Dirt could be forced further into the pleats.

Note: Refer to “Inspecting the Primary Air Cleaner Elements”.

Vacuum Cleaning

Vacuum cleaning is a good method for cleaning primary air cleaner elements which require daily cleaning because of a dry, dusty environment. Cleaning with pressurized air is recommended prior to vacuum cleaning. Vacuum cleaning will not remove deposits of carbon and oil.

Note: Refer to “Inspecting the Primary Air Cleaner Elements”.

Inspecting the Primary Air Cleaner Elements

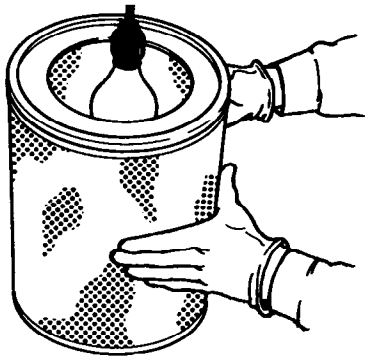

Illustration 62 g00281693

Inspect the clean, dry primary air cleaner element. Use a 60w blue light in a dark room or in a similar facility. Place the blue light in the primary air cleaner element. Rotate the primary air cleaner element. Inspect the primary air cleaner element for tears and/or holes. Inspect the primary air cleaner element for light that may show through the filter material. To confirm the result, compare the primary air cleaner element to a new air cleaner element that has the same part number.

Do not use a primary air cleaner element that has any tears and/or holes in the filter material. Do not use a primary air cleaner element with damaged pleats, gaskets, or seals. Discard damaged primary air cleaner elements.

Storing Primary Air Cleaner Elements

If a primary air cleaner element that passes inspection will not be used, the primary air cleaner element can be stored for future use.

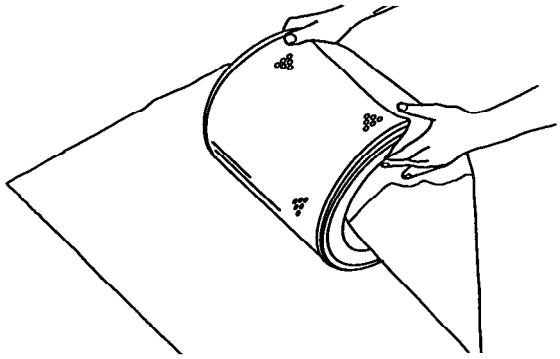

Illustration 63 g00281694

Do not use paint, a waterproof cover, or plastic as a protective covering for storage. An air flow restriction may result. To protect against dirt and damage, wrap the primary air cleaner elements in Volatile Corrosion Inhibited (VCI) paper.

Place the primary air cleaner element into a box for storage. For identification, mark the outside of the box and mark the primary air cleaner element. Include the following information:

- Date of cleaning
- Number of cleanings

Store the box in a dry location.

i06101987

Engine Air Cleaner Service Indicator - Inspect

SMCS Code: 7452-040

Some engines may be equipped with a different service indicator.

The service indicator is mounted on the tube that leads from the engine air cleaner to the turbocharger inlet.

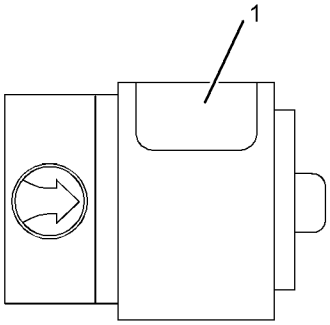

Illustration 64 g01174131

(1) Service Indicator Screen

Inspect and Clean the Indicator

Inspect the service indicator. Clean the air cleaner element or replace the element when the following conditions occur:

- The entire screen on the service indicator becomes red.
- Restriction of the air flowing through the air filter reaches 762 ± 6 mm (30 ± 2.3 inches)H^2O.
- The service indicator has one or more of the following:
- Cracks
- Holes
- Loose fittings

Test the Service Indicator

Service indicators are important instruments. Test the service indicator by using one of the following methods.

- Push the plunger into the element in order to reset. If the service indicator does not reset in three pushes or less, replace the service indicator.
- **The following method can only be used when the air cleaner has been used. This test will not work when the air cleaner has just been cleaned.** Push the plunger into the element. Start the engine. If the plunger does not move, replace the service indicator.

The service indicator may require frequent replacement in environments that are severely dusty. Replace the service indicator at the end of each year if the service indicator has not been replaced during the year. Replace the service indicator when the engine is overhauled. Replace the service indicator whenever major engine components are replaced.

i02369771

Engine Crankcase Breather - Clean

SMCS Code: 1317-070

NOTICE
Perform this maintenance with the engine stopped.

NOTICE
If the crankcase breather is not maintained on a regular basis, it can become plugged. A plugged breather will cause excessive crankcase pressure that may cause crankshaft seal leakage.

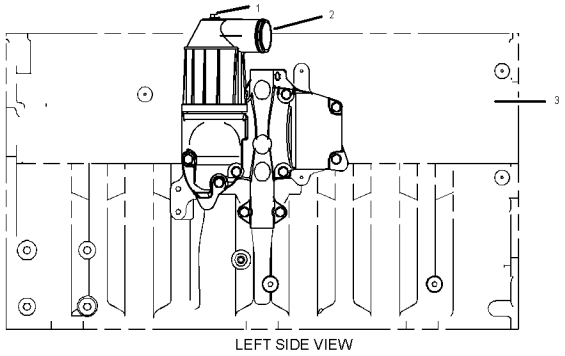

Illustration 65 g01182276

(1) Bolt and Washer

(2) Breather Assembly

(3) Engine Block

1. Remove the bolt and the washer. Remove the breather assembly and the seal.

2. Wash the breather element in solvent that is clean and nonflammable. Allow the breather element to dry before installation.

3. Install a breather element that is clean and dry. Install breather assembly and the seal.

4. Install the bolt and the washer. Refer to Specifications, SENR3130, “Torque Specifications” for the correct torque.

i02375134

Engine Crankcase Breather - Clean

SMCS Code: 1317-070

NOTICE
Perform this maintenance with the engine stopped.

If the crankcase breather is not maintained on a regular basis, the crankcase breather will become plugged. A plugged crankcase breather will cause excessive crankcase pressure that may cause crankshaft seal leakage.

The crankcase breather consists of two components:

1. A breather assembly that is located underneath the valve cover that is at the rear of the engine

2. A breather hose that connects the breather assembly to the outside air beneath the engine

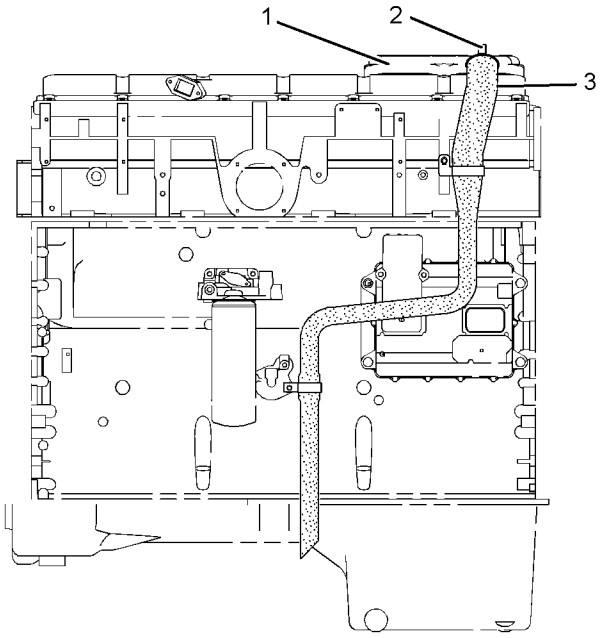

Illustration 66 g01185485

Typical Routing of Breather Hose

(1) Rear Valve Cover

(2) Hose Clamp

(3) Breather Hose

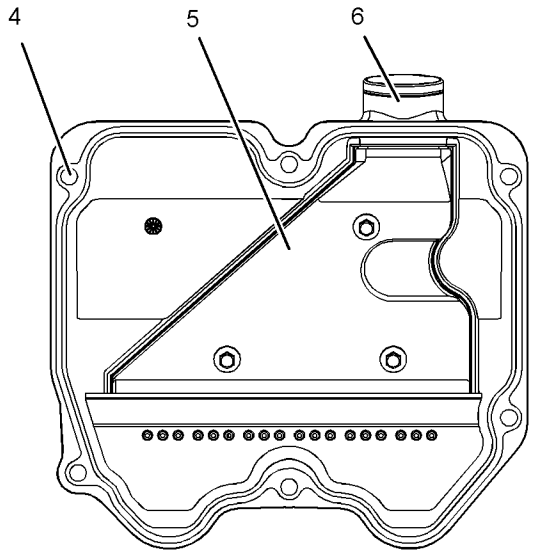

Illustration 67 g01185489

Top View After Removal of Valve Cover

(4) Bolt Hole

(5) Breather Assembly

(6) Access to Hose

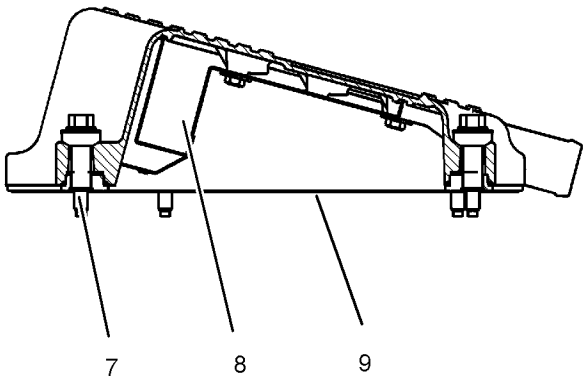

Illustration 68 g01185487

Side View of Valve Cover and Breather Elements

(7) Bolt

(8) Breather Elements

(9) Seal

Use the following procedure in order to clean the breather assembly:

1. Remove the six bolts that attach the valve cover to the engine. Remove the valve cover.
2. Loosen the clamp that attaches the breather hose to the breather assembly and remove the breather assembly.
3. Check the condition of the seal. Replace the seal if the seal is damaged.
4. Remove both of the breather elements. Wash the breather elements and the breather in clean nonflammable solvent.
5. Shake the breather elements until the breather elements are dry. You may also use pressurized air in order to dry the breather elements.
6. Install the elements into the breather and install the breather assembly onto the engine.
7. Install the hose onto the access for the breather, and tighten the clamp around the hose. Replace the valve cover on the engine, and install the six bolts. Consult Specifications, SENR3130, “Torque Specifications” in order to obtain correct instructions for installing the hose clamp and the bolts.

i02456872

Engine Mounts - Inspect

SMCS Code: 1152; 1152-040

Inspect the engine mounts for deterioration and for proper bolt torque. Engine vibration can be caused by the following conditions:

- Improper mounting of the engine
- Deterioration of the engine mounts

Any engine mount that shows deterioration should be replaced. Refer to Special Publication, SENR3130, “Torque Specifications” for the recommended torques. Refer to the OEM recommendations for more information.

i06103562

Engine Oil Level - Check

SMCS Code: 1348-535-FLV

Check the oil level of the engine after the engine has stopped. This maintenance procedure must be performed on a level surface.

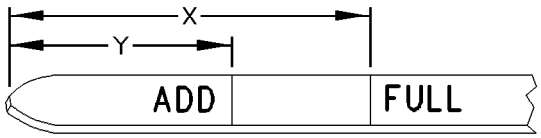

Illustration 69 g00110310

(Y) “ADD” mark
(X) “FULL” mark

1. Maintain the oil level between the “ADD” mark (Y) and the “FULL” mark (X) on the oil level gauge. Do not fill the crankcase above “FULL” mark (X).

NOTICE
Operating your engine when the oil level is above the “FULL” mark could cause your crankshaft to dip into the oil. The air bubbles created from the crankshaft dipping into the oil reduces the oil's lubricating characteristics and could result in the loss of power or engine failure.

2. Remove oil filler cap and add oil, if necessary. Clean the oil filler cap. Reinstall the oil filler cap.

i08705935

Engine Oil Sample - Obtain

SMCS Code: 1348-554-SM

In addition to a good preventive maintenance program, Caterpillar recommends using S·O·S oil analysis at regularly scheduled intervals in order to monitor the condition of the engine and the maintenance requirements of the engine. S·O·S oil analysis provides infrared analysis, which is required for determining nitration and oxidation levels.

Obtain the Sample and the Analysis

WARNING

Hot oil and hot components can cause personal injury. Do not allow hot oil or hot components to contact the skin.

See this Operation and Maintenance Manual, “Model Views” in order to locate the oil sampling valve.

Before you take the oil sample, complete the Label, PEEP5031 for identification of the sample. In order to help obtain the most accurate analysis, provide the following information:

- Engine model
- Service hours on the engine
- The number of hours that have accumulated since the last oil change
- The amount of oil that has been added since the last oil change

To ensure that the sample is representative of the oil in the crankcase, obtain a warm, well mixed oil sample.

To avoid contamination of the oil samples, the tools and the supplies that are used for obtaining oil samples must be clean.

NOTICE
Always use a designated pump for oil sampling, and use a separate designated pump for coolant sampling. Using the same pump for both types of samples may contaminate the samples that are being drawn. This contaminate may cause a false analysis and an incorrect interpretation that could lead to concerns by both dealers and customers.

If the engine is not equipped with a sampling valve, use the 1U-5718 Vacuum Pump. The pump is designed to accept sampling bottles. Disposable tubing must be attached to the pump for insertion into the sump.

For instructions, see Special Publication, PEGJ0047, “How To Take A Good Oil Sample”. Consult your Caterpillar dealer for complete information and assistance in establishing an S·O·S program for your engine.

i02354905

Engine Oil and Filter - Change

SMCS Code: 1318-510

WARNING

Hot oil and hot components can cause personal injury. Do not allow hot oil or hot components to contact the skin.

Do not drain the oil when the engine is cold. As the oil cools, suspended waste particles settle on the bottom of the oil pan. The waste particles are not removed with the draining cold oil. Drain the crankcase with the engine stopped. Drain the engine oil from the crankcase while the engine oil is warm. This draining method allows the waste particles that are suspended in the oil to be drained properly.

Failure to follow this recommended procedure will cause the waste particles to be recirculated through the engine lubrication system with the new oil.

Drain the Engine Oil

After the engine has been run at the normal operating temperature, stop the engine. Use one of the following methods to drain the engine crankcase oil:

- If the engine is equipped with a drain valve, turn the drain valve knob counterclockwise in order to drain the oil. After the oil has drained, turn the drain valve knob clockwise in order to close the drain valve.
- If the engine is not equipped with a drain valve, remove the oil drain plug in order to allow the oil to drain. If the engine is equipped with a shallow sump, remove the bottom oil drain plugs from both ends of the oil pan.

After the oil has drained, the oil drain plugs should be cleaned and installed.

Replace the Oil Filter

NOTICE
Caterpillar oil filters are built to Caterpillar specifications. Use of an oil filter not recommended by Caterpillar could result in severe engine damage to the engine bearings, crankshaft, etc., as a result of the larger waste particles from unfiltered oil entering the engine lubricating system. Only use oil filters recommended by Caterpillar.

1. Remove the oil filter with a 1U-8760 Chain Wrench.
2. Cut the oil filter open with a 175-7546 Oil Filter Cutter Gp. Break apart the pleats and inspect the oil filter for metal debris. An excessive amount of metal debris in the oil filter may indicate early wear or a pending failure.

   Use a magnet to differentiate between the ferrous metals and the nonferrous metals that are found in the oil filter element. Ferrous metals may indicate wear on the steel and cast iron parts of the engine.

   Nonferrous metals may indicate wear on the aluminum parts, brass parts or bronze parts of the engine. Parts that may be affected include the following items: main bearings, rod bearings, turbocharger bearings and cylinder heads.

   Due to normal wear and friction, it is not uncommon to find small amounts of debris in the oil filter. Consult your Caterpillar dealer in order to arrange for a further analysis if an excessive amount of debris is found in the oil filter.

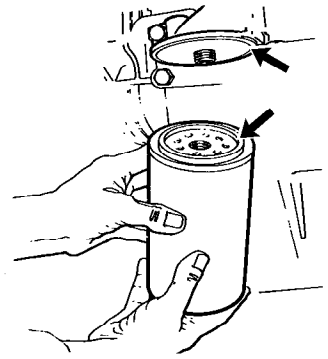

Illustration 70 g00103713
Typical filter mounting base and filter gasket

3. Clean the sealing surface of the filter mounting base. Ensure that all of the old oil filter gasket is removed.
4. Apply clean engine oil to the new oil filter gasket.

NOTICE
Do not fill the oil filters with oil before installing them. This oil would not be filtered and could be contaminated. Contaminated oil can cause accelerated wear to engine components.

5. Install the oil filter. Tighten the oil filter until the oil filter gasket contacts the base. Tighten the oil filter by hand according to the instructions that are shown on the oil filter. Do not overtighten the oil filter.

Fill the Engine Crankcase

1. Remove the oil filler cap. Fill the crankcase with the proper amount of oil. Refer to the Operation and Maintenance Manual, “Refill Capacities and Recommendations” for more information on lubricant specifications and refill capacities.

NOTICE
If equipped with an auxiliary oil filter system or a remote oil filter system, follow the OEM or filter manufacturer's recommendations. Under filling or overfilling the crankcase with oil can cause engine damage.

NOTICE
To prevent crankshaft bearing damage, crank the engine with the fuel OFF. This will fill the oil filters before starting the engine. Do not crank the engine for more than 30 seconds.

2. Start the engine and run the engine at “LOW IDLE” for two minutes. Perform this procedure in order to ensure that the lubrication system has oil and that the oil filters are filled. Inspect the oil filter for oil leaks.
3. Stop the engine and allow the oil to drain back to the sump for a minimum of ten minutes.
4. Remove the oil level gauge in order to check the oil level. Maintain the oil level between the “ADD” and “FULL” marks on the oil level gauge.

i08530633

Engine Performance - Test
(Standby Generator Sets)

SMCS Code: 1000-081

Operate the engine for a minimum of two hours at a minimum load of 60 percent.

Frequently monitor the following parameters duringengine operation:

- Engine Oil Pressure
- Engine Coolant Temperature
- Inlet Air Restriction

Record the data in a log. Compare the new data to the data that was previously recorded. Comparing the new data to the recorded data will establish the normal indicator readings for the engine. An indicator reading that is abnormal may indicate a problem with engine operation. Abnormal indicator readings may also indicate a possible problem with the indicator.

Table 23 is offered as an example of an engine log. Record the engine performance regularly. Retain the recorded information for reference. Compare the recorded data in order to provide an indication of engine condition.

Records of engine performance are an important element of a maintenance program. Record information about the engine operation on a regular basis. This will help to reveal the trends of the engine performance. Records of engine performance will also provide a baseline for evaluating the mechanical condition of the engine.

The data on engine performance can help to predict problems with operation. This data can provide your Caterpillar dealer with information that is useful for recommending maintenance management information. A maintenance program that is properly managed will provide your engine with an optimum service life.

Table 23

Engine Log						
Date						
Authorization						
Engine Serial Number						
Engine Hours						
Engine Speed						
Percent Load						
Ambient Temperature						
Engine Coolant Temperature						
Engine Oil Temperature						
Engine Intake Manifold Pressure						
Engine Intake Manifold Temperature						
Engine Exhaust Back Pressure						
Engine Exhaust Temperature						
Engine Oil Pressure						
System Battery Voltage						
Generator Voltage						
Generator Amperage						
Comments						

i08258801

Engine Protective Devices - Check

SMCS Code: 7400-535

Alarms and shutoffs must function properly. Alarms provide timely warning to the operator. Shutoffs help to prevent damage to the engine. Determining if the engine protective devices are in good working order during normal operation is impossible. Malfunctions must be simulated to test the engine protective devices.

A calibration check of the engine protective devices will ensure that the alarms and shutoffs activate at the setpoints. Ensure that the engine protective devices are functioning properly.

NOTICE

During testing, abnormal operating conditions must be simulated.

The tests must be performed correctly in order to prevent possible damage to the engine.

To prevent damage to the engine, only authorized service personnel or your Cat dealer should perform the tests.

Visual Inspection

Visually check the condition of all gauges, sensors, and wiring. Look for wiring and components that are loose, broken, or damaged. Damaged wiring or components should be repaired or replaced immediately.

i08705395

Engine Speed/Timing Sensor - Clean/Inspect

SMCS Code: 1905-070; 1905-040; 1907-040; 1907-070

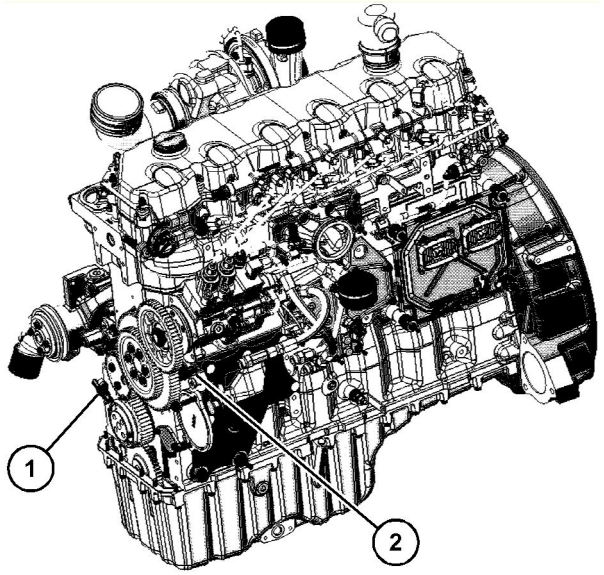

Illustration 71 g06748329

C9.3B Engine

(1) Primary speed / Timing sensor
(2) Secondary speed / Timing sensor

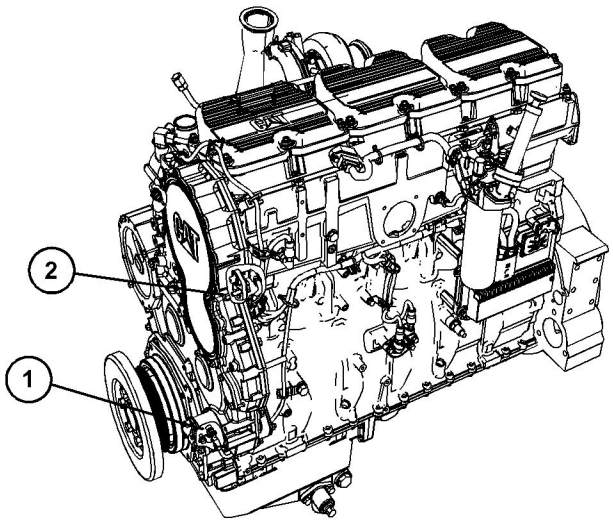

Illustration 72 g06748525

C13 Engine and C15 Engine

(1) Primary speed / Timing sensor
(2) Secondary speed / Timing sensor

1. Remove speed/timing sensors from the front housing. Check the condition of the plastic end of the speed/timing sensors for wear and/or contaminants.
2. Clean the metal shavings and other debris from the face of the speed/timing sensors. Use the procedure in the Service Manual to calibrate the speed/timing sensors.

Refer to the Service Manual for more information on the speed/timing sensors.

i08615206

Engine Valve Lash - Check

SMCS Code: 1105-535

An initial valve lash adjustment on new engines, rebuilt engines, or remanufactured engines is recommended. Reference this Operation and Maintenance Manual, Maintenance Interval Schedule. The adjustment is necessary due to the initial wear of the valve train components and to the seating of the valve train components.

This maintenance is recommended by Caterpillar as part of a lubrication and preventive maintenance schedule in order to help provide maximum engine life.

NOTICE
Only qualified service personnel should perform this maintenance. Refer to the Systems Operation/Testing and Adjusting Manual, “Valve Lash and Valve Bridge Adjustment” article or consult your Caterpillar dealer for the complete valve lash adjustment procedure.

Operation of Caterpillar engines with improper valve adjustments can reduce engine efficiency. This reduced efficiency could result in excessive fuel usage and/or shortened engine component life.

WARNING

Ensure that the engine cannot be started while this maintenance is being performed. To help prevent possible injury, do not use the starting motor to turn the flywheel.

Hot engine components can cause burns. Allow additional time for the engine to cool before measuring/adjusting valve lash clearance.

Ensure that the engine is stopped before measuring the valve lash. To obtain an accurate measurement, allow the valves to cool before this maintenance is performed.

Refer to the Service Manual for more information.

i08192490

Film (Product Identification) - Clean

SMCS Code: 7405-070; 7557-070

Prepare the machine for maintenance. Refer to Operation and Maintenance Manual, “Prepare the Machine for Maintenance”.

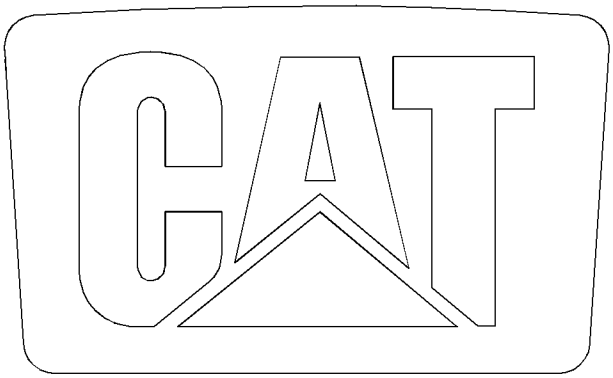

Illustration 73 g02174985

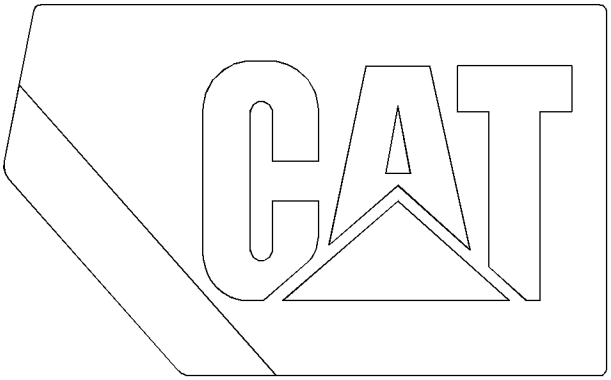

Illustration 74 g02175297

Illustration 75 g06394021

Typical example of the Product Identification Films.

Cleaning of the Films

Make sure that all of the product identification films are legible. Make sure that the recommended procedures are used in order to clean the product identification films. Ensure that all the product identification films are not damaged or missing. Clean the product identification films or replace the films.

Hand Washing

Use a wet solution with no abrasive material that contains no solvents and no alcohol. Use a wet solution with a “pH” value between 3 and 11. Use a soft brush, a rag, or a sponge in order to clean the product identification films. Avoid wearing down the surface of the product identification films with unnecessary scrubbing. Ensure that the surface of the product identification films is flushed with clean water and allow the product identification films to air dry.

Power Washing

Power washing or washing with pressure may be used in order to clean product identification films. However, aggressive washing can damage the product identification films.

Excessive pressure during power washing can damage the product identification films by forcing water underneath the product identification films. Water lessens the adhesion of the product identification film to the product, allowing the product identification film to lift or curl. These problems are magnified by wind. These problems are critical for the perforated film on windows.

To avoid lifting of the edge or other damage to the product identification films, follow these important steps:

- Use a spray nozzle with a wide spray pattern.
- A maximum pressure of 83 bar (1200 psi)
- A maximum water temperature of 50° C (120° F)
- Hold the nozzle perpendicular to the product identification film at a minimum distance of 305 mm (12 inch).
- Do not direct a stream of water at a sharp angle to the edge of the product identification film.

i02369407

Fuel System - Prime

SMCS Code: 1250-548; 1258-548

WARNING

Fuel leaked or spilled onto hot surfaces or electrical components can cause a fire. To help prevent possible injury, turn the start switch off when changing fuel filters or water separator elements. Clean up fuel spills immediately.

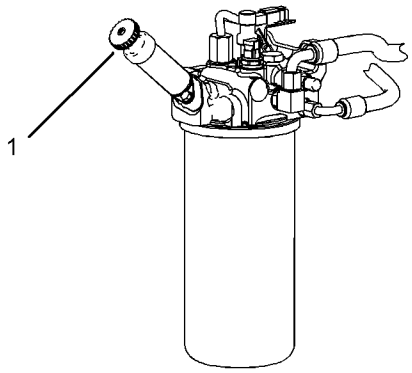

Illustration 76 g01182169

(1) Priming Pump

Priming the fuel system fills the fuel filters. Priming the fuel system also removes air from the fuel system. This procedure is used primarily when the engine runs out of fuel.

1. Unlock the fuel priming pump by turning the handle counterclockwise. Move the plunger for the fuel priming pump in and out until a strong pressure is felt on the fuel priming pump and until the check valve clicks. This procedure will require considerable strokes. Lock the fuel priming pump.
2. Crank the engine after the system is pressurized.

NOTICE
Do not crank the engine continuously for more than 30 seconds. Allow the starting motor to cool for two minutes before cranking the engine again.

3. If the engine does not start, repeat Steps 1 and 2 in order to start the engine.

i08397614

Fuel System Primary Filter (Water Separator) Element - Replace

SMCS Code: 1260-510-FQ; 1263-510-FQ

WARNING

Personal injury or death may result from failure to adhere to the following procedures.

Fuel leaked or spilled onto hot surfaces or electrical components can cause a fire.

Clean up all leaked or spilled fuel. Do not smoke while working on the fuel system.

Turn the disconnect switch OFF or disconnect the battery when changing fuel filters.

NOTICE
Do not fill the fuel filters with fuel before installing the fuel filters. The fuel will not be filtered and could be contaminated. Contaminated fuel will cause accelerated wear to fuel system parts.

NOTICE
Care must be taken to ensure that fluids are contained during performance of inspection, maintenance, testing, adjusting and repair of the product. Be prepared to collect the fluid with suitable containers before opening any compartment or disassembling any component containing fluids.

Refer to Special Publication, NENG2500, “Caterpillar Dealer Service Tool Catalog” guide for tools and supplies suitable to collect and contain fluids on Caterpillar products.

Dispose of all fluids according to local regulations and mandates.

1. Turn the start switch to the OFF position or disconnect the battery (starting motor) when maintenance is performed on a fuel filter.
2. Shut off the fuel supply.

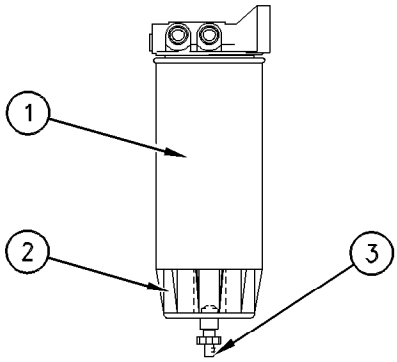

Illustration 77 g00104012

(1) filter body
(2) bowl
(3) drain valve

Note: Refer to this Operation and Maintenance Manual, “General Hazard Information” that pertains to containing fluid spillage.

3. Turn drain valve (3) counterclockwise in order to open. The drain valve is located on the bottom of the water separator.
4. Drain the water and sediment into a suitable container. Dispose of the drained fluids and used filters according to local regulations.
5. Close the drain valve.
6. Hold the bottom of the filter while you loosen the bowl. Remove the bowl.
7. Turn the filter counterclockwise in order to loosen the filter. If the filter will not turn, use a strap wrench to loosen the filter.
8. Remove the filter and discard the filter. Clean the bottom of the filter mounting base. Make sure that all of the old filter seal is removed from the bottom groove of the opening in the base.
9. Clean the water separator bowl and clean the groove for the seal. Inspect the seal. If the seal is worn or damaged, replace the seal.
10. Lubricate the seal with clean diesel fuel or lubricate the seal with clean motor oil. Place the seal in the groove on the water separator bowl.
11. Install the water separator bowl onto the new fuel filter by hand. Tighten the bowl assembly to 15 15 N·m (11 lb ft).
12. Apply clean diesel fuel to the seal of the new filter.

13. Install the new filter onto the base. Tighten the filter by hand until the seal contacts the filter base. Additionally tighten the filter by 1/3 to 1/2 rotation.

14. Open the fuel shutoff valve.

15. Reconnect the battery, if necessary.

16. Purge the air from the fuel system. See this Operation and Maintenance Manual, “Fuel System - Prime” for further instructions.

17. Stop the engine and check for leaks.

Note: The secondary fuel filter should also be replaced at this time. See this Operation and Maintenance Manual, “Fuel System Secondary Filter - Replace” for further information.

i02370475

Fuel System Primary Filter/ Water Separator - Drain

SMCS Code: 1260-543; 1263-543

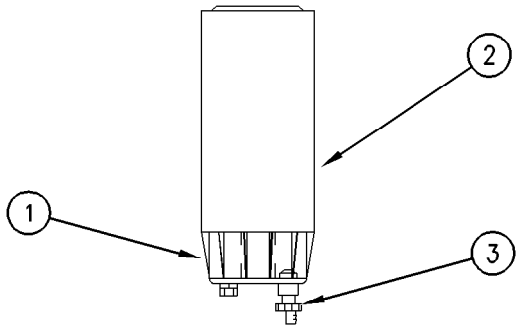

Illustration 78 g00668636

(1) Bowl
(2) Element
(3) Drain

Bowl (1) should be monitored weekly for signs of water. If water is present, drain the water from the bowl.

1. Open drain (3). The drain is a self-ventilated drain. Catch the draining water in a suitable container. Dispose of the water properly.

2. Close drain (3).

NOTICE
The water separator is under suction during normal engine operation. Ensure that the drain valve is tightened securely to help prevent air from entering the fuel system.

i08397650

Fuel Tank Water and Sediment - Drain

SMCS Code: 1273-543-M&S

NOTICE
Care must be taken to ensure that fluids are contained during performance of inspection, maintenance, testing, adjusting, and repair of the product. Be prepared to collect the fluid with suitable containers before opening any compartment or disassembling any component containing fluids.

Refer to Special Publication, NENG2500, “Cat Dealer Service Tool Catalog” or refer to Special Publication, PECJ0003, “Cat Shop Supplies and Tools Catalog” for tools and supplies suitable to collect and contain fluids on Cat products.

Dispose of all fluids according to local regulations and mandates.

Fuel Tank

Fuel quality is critical to the performance and to the service life of the engine. Water in the fuel can cause excessive wear to the fuel system. Condensation occurs during the heating and cooling of fuel. The condensation occurs as the fuel passes through the fuel system and the fuel returns to the fuel tank. This causes water to accumulate in fuel tanks. Draining the fuel tank regularly and obtaining fuel from reliable sources can help to eliminate water in the fuel. The fuel tank utilizes a fuel tank vent to prevent an air lock or vacuum. Ensure that the vent is free of debris and not damaged.

Drain the Water and the Sediment

Fuel tanks should contain some provision for draining water and draining sediment from the bottom of the fuel tanks.

Prepare to catch water and sediment in an appropriate container. Connect a hose (if necessary) to the valve prior to opening the valve.

Open the drain valve on the bottom of the fuel tank to drain the water and the sediment. Close the drain valve.

Note: Failure to close the drain properly could result in fuel leakage, which could have detrimental results to performance.

Check the fuel daily. Drain the water and sediment from the fuel tank after operating the engine. Drain the water and sediment from the fuel tank after the fuel tank has been filled. Allow 5 to 10 minutes before performing this procedure.

Fill the fuel tank after operating the engine to drive out moist air. This procedure will help prevent condensation. Do not fill the tank to the top. The fuel expands as the fuel gets warm. The tank may overflow.

Some fuel tanks use stand pipes that allow water and sediment to settle below the end of the fuel stand pipe. Some fuel tanks use supply lines that take fuel directly from the bottom of the tank. If the engine is equipped with this system, regular maintenance of the fuel system filter is important.

Fuel Storage Tanks

Drain the water and the sediment from the fuel storage tank during the following conditions:

- Weekly
- Refill of the tank

This procedure will help prevent water or sediment from being pumped from the storage tank into the engine fuel tank. A four micron(c) absolute filter for the breather vent on the fuel tank is also recommended.

If a bulk storage tank has been refilled or moved recently, allow adequate time for the sediment to settle before filling the engine fuel tank. Internal baffles in the bulk storage tank will also help trap sediment. Filtering fuel that is pumped from the storage tank helps to ensure the quality of the fuel. When possible, water separators should be used.

i07109997

Generator - Dry

SMCS Code: 4450-569

WARNING

Personal injury or death can result from improper troubleshooting and repair procedures.

The following troubleshooting and repair procedures should only be performed by qualified personnel familiar with this equipment.

Refer to this Operation and Maintenance Manual, “Generator Isolating for Maintenance” for information regarding the procedure to isolate the generator in a safe manner.

Refer to Special Instruction, SEHS9124, “Cleaning and Drying of the Generator” for further necessary information.

Of the following methods for drying the generator, the use of external heat is preferred.

- External heat
- Internal heat
- Combination of external and internal heat
- Circulating current

External heat is the most preferable method. Insulation drying time can vary from a few hours to several days. The drying time depends on the moisture content and the process for drying that is used.

Note: Drying sometimes does not produce the required results. The use of a qualified rebuild shop may be necessary for dipping and drying the generator.

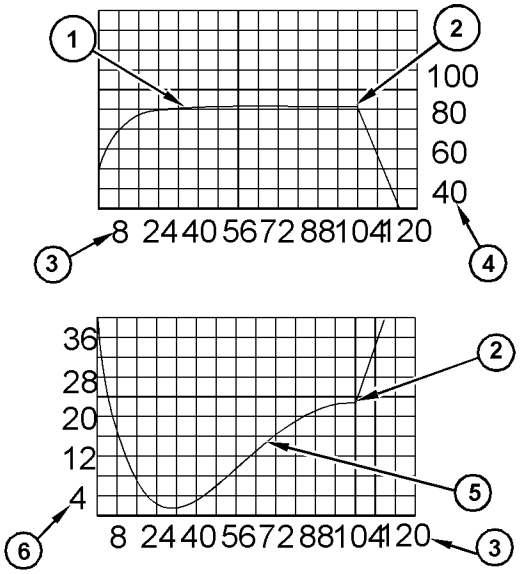

Illustration 79 g02175752

Typical curves of the resistance in the insulation that is drying

(1) Curve of the temperature in the windings
(2) Heat turned off.
(3) Drying time in hours
(4) Temperature in degrees celsius
(5) Curve of insulation resistance during drying process
(6) Insulation resistance in megohms

Note: When new insulation or damp insulation is being dried, the resistance will probably fall rapidly. The rapid fall in resistance is the result of the temperature being raised to a value for drying. After reaching a minimum for a given temperature, the resistance will again rise as moisture is driven out of the insulation. The actual values will vary with each situation. Refer to Illustration 80 .

If the windings or insulation is wet during the resistance measurement, use a 5 megohm resistor for protection in series with red positive lead. This procedure limits the voltage across the circuit under the test. Use this method until drying is well in progress and the resistance has reached an acceptable level.

Check the windings after every 4 hours when either external or internal heat is used to dry the generator. Check the windings every hour when circulating current is used to dry the generator. Refer to Special Instruction, SEHS9124, “Cleaning and Drying of the Generator” for more information.

Drying is complete when the tests show no increase in resistance and the resistance is above the minimum. Record these readings and compare these readings. Keep these records for future reference.

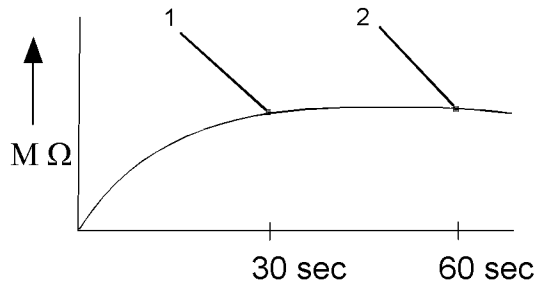

Illustration 80 g01696934

Curve of insulation resistance for windings in good condition

(1) Resistance after 30 seconds
(2) Resistance after 60 seconds

Illustration 80 indicates the curve of the resistance of a normal high resistance in the windings over a period of 60 seconds. The resistance after 60 seconds will be greater than the resistance or equal to the resistance after 30 seconds .

Note: If the insulation resistance after 60 seconds is not higher than the resistance after 30 seconds , the insulation may be weak.

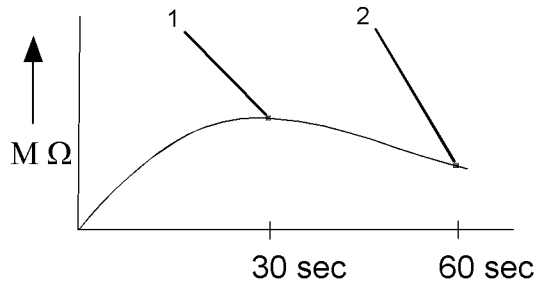

Illustration 81 g01697074

Curve of insulation resistance for windings that are wet or dirty

(1) Resistance after 30 seconds
(2) Resistance after 60 seconds

Illustration 81 indicates the curve of the resistance that is decaying over a period of 60 seconds. If the insulation resistance after 60 seconds is not higher than the resistance after 30 seconds , clean the windings and thoroughly dry the windings. Refer to Special Instruction, SEHS9124, “Cleaning and Drying of the Generator” for more information.

Note: Caterpillar recommends a minimum acceptable insulation resistance of 2 megohm for generators which operate with less than 1000 V of operating or rated voltage. Generators which operate at 1000 V of operating or rated voltage should have a minimum insulation resistance as determined by the following equation:

R = (V/1000) + M

“R” is the minimum insulation resistance.

“V” is the rated voltage.

“M” is 1 megohm.

These values are approximate. Operating a generator with less resistance may be possible.

External Heat

Ovens

The best oven is a forced air drying oven for drying electrical equipment. Radiant ovens sometimes cause localized overheating.

NOTICE
Do not heat the generator too quickly. Try to limit the rise in temperature of the insulation and windings to 11.11° C (20° F) per hour. Failure to do so may cause equipment damage.

Note: Many electrical shops are equipped with baking ovens.

Heat the generator to approximately 75° C (167° F). Never exceed 75° C (167° F) until the insulation tester tests correctly for insulation resistance (at least 4 hours).

Alternate Method

A tent formed by a tarp or a canvas with heated lamps or a portable space heater may be used as an alternate method.

A hole should be left in the top of the tarp for ensuring proper circulation through the generator and for permitting the moisture to exhaust. Heat the generator to approximately 75° C (167° F). Never exceed 75° C (167° F) until the insulation tester tests correctly for insulation resistance (at least 4 hours).

Internal Heating

If generators operate under one of the following conditions, the electric space heaters should be installed as part of the generator:

- Generators are in damp environments and go for long periods of time without operation.
- Generators operate regularly in an environment with moisture laden air.

Circulating Current

Drying can be accomplished by circulating low voltage current through the windings. Since the voltage is low, the breakdown of the insulation will not occur as the breakdown might have occurred with normal operation and wet insulation. Refer to Special Instruction, SEHS9124, “Cleaning and Drying of the Generator” for this procedure.

i08273274

Generator - Inspect

SMCS Code: 4450-040

⚠ WARNING

Personal injury or death can result from improper troubleshooting and repair procedures.

The following troubleshooting and repair procedures should only be performed by qualified personnel familiar with this equipment.

⚠ WARNING

The high voltage that is produced by an operating generator set can cause severe injury or death. Before performing any maintenance or repairs, ensure that the generator will not start.

Place the engine control switch in the “OFF” position. Attach “DO NOT OPERATE” tags to all starting controls. Disconnect the batteries or disable the starting system. Lock out all switchgear and automatic transfer switches that are associated with the generator.

Refer to Safety Section, “Generator Isolating for Maintenance” for information regarding the procedure to isolate the generator safely.

Proper maintenance of electrical equipment requires periodic visual examination of the generator and periodic visual examination of the windings. Proper maintenance of electrical equipment also requires appropriate electrical checks and appropriate thermal checks. Insulation material should be examined for cracks. The insulation material should be examined for accumulations of dirt and dust. If there is an insulation resistance value that is below normal, a conductive path may be present. This conductive path may be made of one of the following materials:

- Carbon
- Salt
- Metal dust
- Dirt that is saturated with moisture

These contaminants will develop a conductive path which may produce shorts. Cleaning is advisable if heavy accumulations of dirt can be seen or if heavy accumulations of dust can be seen. If excess dirt is the cause of a restriction in the ventilation, cleaning is also advisable. Restricted ventilation will cause excessive heating.

NOTICE
To avoid the possibility of deterioration to the generator windings, do not clean the generator unless there is visual, electrical, or thermal evidence that dirt is present.

If harmful dirt accumulations are present, various cleaning techniques are available. The cleaning procedure that is used may be determined by one of the items on the following list:

- The extent of the cleaning procedure that is being attempted
- The type of enclosure of the generator
- The voltage rating of the generator
- The type of dirt that is being removed

Cleaning (Assembled Generators)

Cleaning may be required at the point of installation. At this point, complete disassembly of the generator may not be necessary or feasible. In this case, a vacuum cleaner should be used to pick up the following items: dry dirt, dust, and carbon. This cleaning will prevent the spreading of these contaminants.

A small nonconductive tube may need to be connected to the vacuum cleaner. This tube will allow the vacuum cleaner to clean the surfaces that are not exposed. After most of the dust has been removed, a small brush may be attached to the vacuum hose. This brush will help remove dirt that is more firmly attached to the surface.

After the initial cleaning with a vacuum, compressed air may be used to remove the remaining dust and dirt. Compressed air that is used for cleaning should be free of moisture and free of oil. Air pressure should be a maximum of 210 kPa (30 psi) to prevent mechanical damage to the insulation. If the above cleaning procedures are not effective, consult a Cat dealer.

Cleaning (Disassembled Generators)

An initial insulation resistance check should be made on the generator to confirm electrical integrity. A minimum reading of 2 megohm would be expected with severely contaminated generators. A zero megohm reading may indicate an insulation breakdown. An insulation breakdown requires more than cleaning. An insulation breakdown requires repair.

A high-pressure wash is normally an effective way to clean windings. This cleaning includes windings that have been exposed to flooding or windings that have been contaminated by salt. A solution of hot water and detergent is used for this method of cleaning.

A high-pressure wash sprays a high velocity fluid stream of this solution over the generator that is being cleaned. This detergent washing is followed by multiple sprays of clean water. The clean water is used to remove the detergent or the clean water is used to dilute the detergent.

Allow the generator to dry at room temperature. Check the insulation resistance. The insulation resistance should now be normal. If the insulation resistance is not normal, repeat the procedure. The use of solvents can be used if the generator is contaminated with oil or if the generator is contaminated with grease.

Note: For more information on drying methods, refer to Special Instructions, SEHS9124, “Cleaning and Drying of Electric Set Generators”.

i07916370

Generator Bearing - Inspect

SMCS Code: 4471-040

The ball bearings that are used in this generator contains grease. This grease is subject to deterioration. If the generator is stored for more than 1 year, without rotating the rotor, new ball bearings may be required. These bearings are greased at the factory. These bearings do not require any additional greasing in the field. Remove any necessary covers to inspect the rear bearings of the generators. Front bearings may be inspected through the fan screen. Perform a visual inspection for obvious damage, for corrosion, or for an excessive amount of purged grease around the bearing sleeves. Small amounts of purged grease are expected. Grease that covers the brackets or the windings is excessive.

Bearing inspection should include the collection of vibration data. Refer to this Operation and Maintenance Manual, “Generator Set Vibration - Test/Record” for further information concerning checking the vibration levels.

Bearing temperature should also be measured and recorded as a part of this inspection. Refer to this Operation and Maintenance Manual, “Generator Bearing Temperature - Test/Record” for further information concerning checking the vibration levels.

If inspection indicates that bearings are free of rust or corrosion, and no noise or excessive vibration occur on start-up, replacement is not necessary.

i08316370

Generator Bearing - Lubricate

SMCS Code: 4471-086

Note: For information on generator bearing service and bearing lubrication intervals, refer to “Special Instruction” REHS4892, “Generator Bearing Service”.

i07908548

Generator Bearing - Replace

SMCS Code: 4471-510

The generator bearings are shielded and greased for the life of the bearing. Some purging of the grease occurs normally with the bearings. Carefully adhere to the recommendations for the following conditions: temperature, vibration, contamination, and alignment. Over time, the bearing grease may deteriorate. This deterioration may cause the grease to loose lubricating properties.

Caterpillar recommends the replacement of the bearing after 10 years of service in a standby application in normal conditions. If the bearing is installed in the following conditions, Caterpillar recommends replacement of the bearing in 5 years.

- High temperature environment (Refer to the temperature chart in this Operation and Maintenance Manual, “Generator Bearing - Lubricate” article.
- Condensing humidity
- Coastal environment
- Chemical environment
- Abrasive environment

i07907190

Generator Bearing Temperature - Test/Record

SMCS Code: 4471-081-TA

The monitoring of bearing temperature may prevent premature bearing failure. A generator set should never operate above the recommended set points. Keep records to monitor the changes in the temperature of the bearing.

Note: Measure the bearing temperature after the generator reaches normal operating temperature.

Infrared Thermometers

Bearing temperatures can also be recorded with the use of an infrared thermometer. Refer to Special Publication, NENG2500, “Cat Dealer Service Tools Catalog” for various infrared thermometers. Follow the instructions that come with your infrared thermometer.

i04066150

Generator Lead (Round Cable) - Check
(If Equipped)

SMCS Code: 4450-535

The generator set may have braided square conductors or multiple round cables between the generator and the breaker.

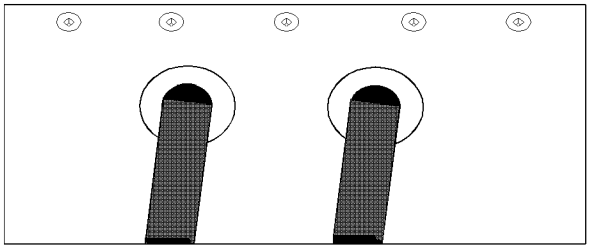

Illustration 82 g02223453
Round generator lead cables

Ensure that the generator output leads are routed out of the generator in a manner that prevents the leads from rubbing against metal objects. Visually inspect the following areas for cracking and physical damage:

- Stator output leads
- Protective sleeving
- Insulation

i08286680

Generator Load - Check

SMCS Code: 4450-535-LA

WARNING

Personal injury or death can result from high voltage.

When power generation equipment must be in operation to make tests and/or adjustments, high voltage and current are present.

Improper test equipment can fail and present a high voltage shock hazard to its user.

Make sure the testing equipment is designed for and correctly operated for high voltage and current tests being made.

During normal operation, monitor the power factor and monitor generator loading.

When a three-phase generator is installed, ensure that the total current in any one phase does not exceed the nameplate rating. Or, when a three-phase generator is reconnected, ensure that the total current in any one phase does not exceed the nameplate rating. Each phase should carry the same load. Carrying the same load allows the three-phase generator to work at the rated capacity. If one-phase current exceeds the nameplate amperage, an electrical imbalance will occur. An electrical imbalance can result in an electrical overload and an electrical imbalance can result in overheating on three-phase generators. This imbalance is not applicable to single-phase generators.

The power factor can be referred to as the efficiency of the load. This power factor can be expressed as the ratio of kVA to actual kW. The power factor can be calculated by dividing kW by kVA. Power factor is expressed as a decimal. Power factor is used to mean the portion of current that is supplied to a system that is doing useful work. The portion of the current that is not doing useful work is absorbed in maintaining the magnetic field in motors. This current (reactive load) can be maintained without engine power.

i08286685

Generator Set - Test

SMCS Code: 4450-081

DANGER

DANGER: Shock/Electrocution Hazard-Do not operate this equipment or work on this equipment unless you have read and understand the instructions and warnings in the Operation and Maintenance Manual. Failure to follow the instructions or heed the warnings will result in serious injury or death.

WARNING

Personal injury or death can result from high voltage.

When power generation equipment must be in operation to make tests and/or adjustments, high voltage and current are present.

Improper test equipment can fail and present a high voltage shock hazard to its user.

Make sure the testing equipment is designed for and correctly operated for high voltage and current tests being made.

When servicing or repairing electric power generation equipment:

- **Make sure the unit is off-line (disconnected from utility and/or other generators power service), and either locked out or tagged DO NOT OPERATE.**
- **Make sure the generator engine is stopped.**
- **Make sure all batteries are disconnected.**
- **Make sure all capacitors are discharged.**

Table 24

Tools Needed		
Part Number	**Part**	**Quantity**
237-5130	Digital Multimeter	1
	12 VDC battery	1
	Potential Transformer	1

The generator set functional test is a simplified test that can be performed to determine if the generator is functional. The generator set functional test should be performed on a generator set that is under load.

The generator set functional test determines if the following statements happen:

- A phase voltage is being generated.
- The phase voltages are balanced.
- The phase voltages change relative to engine speed.

The generator set functional test consists of the following steps:

1. Stop the generator. Connect the potential transformer high voltage winding to the generator terminals (T1) and (T2). Connect the voltmeter to the low voltage winding. If two transformers are available, connect the high voltage winding of the second transformer to the generator terminals (T1) and (T3). Connect the secondary terminals that correspond to generator terminal (T2) of both transformers together.
2. Disconnect wires “E+” and “E-” from the voltage regulator. Disconnect the generator from the load.
3. Connect a 12 VDC automotive battery to wires “E +” and “E-” .
4. Measure the AC voltage across the low voltage terminals of the transformer that correspond to the following generator terminals: “T1” and “T2” , “T2” , and “T3” and “T3” and “T1” . Record the voltages.

i08707466

Generator Set Alignment - Check

SMCS Code: 7002-024

Upon installation, or when moved, the generator set must be checked for proper alignment. If the generator set is run at the full continuous rating, the alignment of the generator to the engine must be checked annually.

Properly maintain the alignment between the engine and the driven equipment to minimize the following problems:

- Bearing problems
- Vibration of the engine crankshaft
- Vibration of the driven equipment

Refer to the following information for more information about the alignment of the generator set:

- Special Instruction, SEHS7654, “Alignment - General Instructions”
- Special Instruction, SEHS7259, “Alignment of Single Bearing Generators”
- Special Instruction, REHS0177, “Alignment of the Close Coupled Two Bearing Generators”

Keep a record of the measurement of the alignment. The record may be used to check the trend of the alignment. The record may be used to analyze the trend of the alignment.

i08286683

Generator Set Vibration - Inspect

SMCS Code: 4450-040-VI

Excessive vibration will indicate a problem with the generator set. The vibration may be caused by the following:

- Misalignment of the coupling between the engine and the generator
- Faulty mounting or play in the coupling
- Incorrect balancing of the generator shaft or engine crankshaft
- A three-phase generator has too much load on a single phase.
- There is a short circuit in the stator.

Check for vibration damage. Vibration may cause the following problems:

- loose fittings
- loose bolts
- excessive noise
- cracked insulation

The following areas are susceptible to vibration damage:

- stator output leads
- protective sleeving
- insulation
- exposed electrical connections
- transformers
- fuses
- capacitors

Check the generator set vibration level by using a broad spectrum analyzer.

i08312485

Generator Set Vibration - Test/ Record

SMCS Code: 4450-081-VI

NOTICE
Generator tests are to be performed by a trained Generator technician.

Check for vibration damage.

Vibration may cause the following problems:

- Coupling wear
- Loose fittings
- Fatigue of the metal components of the engine
- Cracks in the cabinet which surrounds the generator
- Cracks in welds
- Excessive noise
- Cracked insulation

The following areas are susceptible to vibration damage:

- Coupling for the generator set
- Generator bearings
- Stator output leads
- Protective sleeving
- Insulation
- Exposed electrical connections
- Transformers
- Fuses
- Capacitors
- Lightning arresters

When a generator set is installed, a vibration plot should be recorded to help in diagnosing potential problems. This vibration plot should be updated yearly. Update the vibration plot when the generator set is moved and when the engine is overhauled. This procedure will allow the trend of the vibration to be monitored and analyzed. A potential problem may be prevented by monitoring the trend of the vibration. If the vibration is approaching the limit of the specification of the component, the problem may be more imminent. Refer to Data Sheet, LEKQ4023, “Linear Vibration” for the allowable limits of vibration.

Caterpillar also recommends recording the vibration of the bearing at the generator bearing bracket.

If the vibration exceeds the EDS limits for vibration, check the alignment. Refer to this Operation and Maintenance Manual, “Generator Set Alignment - Check” for the alignment procedure.

Contact the Cat Dealer Service Tools group for information on ordering a vibration analyzer that will meet your needs.

i08705302

Hoses and Clamps - Inspect/ Replace

SMCS Code: 7554-040; 7554-510

Hoses and clamps must be inspected periodically and replaced at the recommended interval to ensure safe and continuous operation of the engine. Failure to replace a fuel hose at the recommended change interval may result in a hazardous situation. Take proper safety precautions before inspecting or replacing hoses and clamps.

Note: Always use a board or cardboard when the engine components are checked for leaks. Leaking fluid that is under pressure can cause serious injury or possible death. Leaks that are the size of a pin hole are included. Refer to Operation and Maintenance Manual, “General Hazard Information” for more information.

Note: Ensure that the hose is compatible with the application.

Inspect Tubes, Hoses, Bellows, and Clamps

Inspect all tubes and hoses for leaks that are caused by the following conditions. Replace any tube or hose which exhibits any of the following conditions. Failure to replace a tube or hose which exhibits any of the following conditions may result in a hazardous situation.

- Hoses which are cracked
- Hoses which are soft
- Outer covering that is chafed or cut
- Exposed wire that is used for reinforcement
- Outer covering that is ballooning locally
- Flexible part of the hose that is kinked or crushed
- Armoring that is embedded in the outer covering
- Exhaust bellows for leaks or damage

- Hoses which exhibit signs of leakage which are not the result of loose couplings or clamps

Inspect all clamps for the following conditions. Replace any clamp which exhibits signs of any of the following conditions.

- Cracking
- Looseness
- Damage

Inspect all couplings for leaks. Replace any coupling which exhibits signs of leaks.

Each installation application can be different. The differences depend on the following factors:

- Type of hose
- Type of fitting material
- Anticipated expansion and contraction of the hose
- Anticipated expansion and contraction of the fittings

Due to extreme temperature changes, the hose will heat set. Heat setting causes hose clamps to loosen which can result in leaks. A constant torque hose clamp will help to prevent loose hose clamps.

Replace hoses that are cracked or soft. Replace hoses that show signs of leakage. Replace hoses that show signs of damage. Replace hose clamps that are cracked or damaged. Tighten or replace hose clamps which are loose.

Replace the Hoses and the Clamps

NOTICE

Care must be taken to ensure that fluids are contained during performance of inspection, maintenance, testing, adjusting, and repair of the product. Be prepared to collect the fluid with suitable containers before opening any compartment or disassembling any component containing fluids.

Refer to Special Publication, NENG2500, “Cat Dealer Service Tool Catalog” or refer to Special Publication, PECJ0003, “Cat Shop Supplies and Tools Catalog” for tools and supplies suitable to collect and contain fluids on Cat products.

Dispose of all fluids according to local regulations and mandates.

Cooling System

WARNING

Pressurized System: Hot coolant can cause serious burns. To open the cooling system filler cap, stop the engine and wait until the cooling system components are cool. Loosen the cooling system pressure cap slowly in order to relieve the pressure.

WARNING

Personal injury can result from removing hoses or fittings in a pressure system.

Failure to relieve pressure can cause personal injury.

Do not disconnect or remove hoses or fittings until all pressure in the system has been relieved.

1. Stop the engine.
2. Allow the engine to cool.
3. Before servicing a coolant hose, slowly loosen the filler cap for the cooling system to relieve any pressure.
4. Remove the filler cap for the cooling system.
5. Drain the coolant from the cooling system to a level that is below the hose that is being replaced. Drain the coolant into a suitable clean container. The coolant can be reused.
6. Remove the hose clamps.
7. Disconnect the old hose.
8. Replace the old hose with a new hose.
9. Install hose clamps which have been inspected or install new hose clamps. Refer to Specifications, SENR3130, “Torque Specifications” “Hose Clamps” for information about selecting and installing the proper hose clamps.
10. Refill the cooling system.
11. Clean the coolant filler cap. Inspect the gaskets on the filler cap. Inspect the gasket seat. Inspect the vacuum valve and seat for debris or damage. Replace the filler cap if the gaskets are damaged. Install the filler cap.
12. Start the engine. Inspect the cooling system for leaks.

Fuel System

WARNING

Personal injury can result from removing hoses or fittings in a pressure system.

Failure to relieve pressure can cause personal injury.

Do not disconnect or remove hoses or fittings until all pressure in the system has been relieved.

WARNING

Contact with high pressure fuel may cause fluid penetration and burn hazards. High pressure fuel spray may cause a fire hazard. Failure to follow these inspection, maintenance and service instructions may cause personal injury or death.

NOTICE
Do not bend or strike high pressure lines. Do not install bent or damaged lines, tubes or hoses. Repair any loose or damaged fuel and oil lines, tubes and hoses. Leaks can cause fires. Inspect all lines, tubes and hoses carefully. Tighten all connections to the recommended torque.

NOTICE
Do not allow dirt to enter the fuel system. Thoroughly clean the area around a fuel system component that will be disconnected. Fit a suitable cover over any disconnected fuel system components.

Note: High-pressure fuel lines may be installed between the high-pressure fuel pump and the fuel injectors. High-pressure fuel lines are constantly charged with high pressure. Do not check the high-pressure fuel lines with the engine or the starting motor in operation. Wait for 10 minutes after the engine stops before you perform any service or repair on high-pressure fuel lines. Waiting for 10 minutes will allow the pressure to be purged.

1. Drain the fuel from the fuel system to a level that is below the hose that is being replaced.
2. Remove the hose clamps.
3. Disconnect the old hose.

Note: When servicing fuel system, use cap/s or cover/s as required to protect the system and maintain fuel system cleanliness.

4. Replace the old hose with a new hose.
5. Install hose clamps which have been inspected or install new hose clamps. Refer to Specifications, SENR3130, “Torque Specifications” “Hose Clamps” for information about selecting and installing the proper hose clamps.
6. Carefully inspect the engine for any spilled fuel. Make sure that no fuel remains on or close to the engine.

Note: Fuel must be added to the fuel system ahead of the fuel filter.

7. Refill the fuel system. Refer to this Operation and Maintenance Manual, “Fuel System - Prime” for information about priming the engine with fuel.
8. Start the engine. Inspect the fuel system for leaks.

Lubrication System

WARNING

Hot oil and hot components can cause personal injury. Do not allow hot oil or hot components to contact the skin.

1. Drain the oil from the lubrication system to a level that is below the hose that is being replaced.
2. Remove the hose clamps.
3. Disconnect the old hose.
4. Replace the old hose with a new hose.
5. Install hose clamps which have been inspected or install new hose clamps. Refer to Specifications, SENR3130, “Torque Specifications” “Hose Clamps” for information about selecting and installing the proper hose clamps.
6. Refill the lubrication system. Refer to this Operation and Maintenance Manual, “Engine Oil Level - Check” to ensure that the lubrication system is filled with the proper amount of engine oil.
7. Start the engine. Inspect the lubrication system for leaks.

Air System

Note: Boost leaks could result in excessive combustion temperatures.

1. Remove the hose clamps.
2. Disconnect the old hose.
3. Replace the old hose with a new hose.

4. Install hose clamps which have been inspected or install new hose clamps. Refer to Specifications, SENR3130, “Torque Specifications” “Hose Clamps” for information about selecting and installing the proper hose clamps.

Note: The bellows and the V-clamps that are used on the exhaust bellows should never be reused.

5. Start the engine. Inspect the air lines for leaks.

i08257569

Jacket Water Heater - Check

SMCS Code: 1383-535

Jacket water heaters help to improve starting in ambient temperatures that are below 21 °C (70 °F). All installations that require automatic starting should have jacket water heaters.

Check the operation of the jacket water heater. Check the operation of the circulation pump, if equipped. For an ambient temperature of 0 °C (32 °F), the heater should maintain the jacket water coolant temperature at approximately 32 °C (90 °F).

i08586112

Overhaul Considerations

SMCS Code: 7595-043

Reduced hours of operation at full load will result in a lower average power demand. A decreased average power demand should increase both the engine service life and the overhaul interval.

The need for an overhaul is indicated by increased fuel consumption and by reduced power.

The following factors are important when a decision is being made on the proper time for an engine overhaul:

- The need for preventive maintenance
- The quality of the fuel that is being used
- The operating conditions
- The results of the S·O·S analysis

Oil Consumption as an Overhaul Indicator

Oil consumption, fuel consumption, and maintenance information can be used to estimate the total operating cost for your Cat engine. Oil consumption can also be used to estimate the required capacity of a makeup oil tank that is suitable for the maintenance intervals.

Oil consumption is in proportion to the percentage of the rated engine load. As the percentage of the engine load is increased, the amount of oil that is consumed per hour also increases.

The oil consumption rate (brake-specific oil consumption) is measured in grams per kW/h (lb per bhp). The brake-specific oil consumption (BSOC) depends on the engine load. Consult your Cat dealer for assistance in determining the typical oil consumption rate for your engine.

When an engine oil consumption has risen to three times the original oil consumption rate due to normal wear, an engine overhaul should be scheduled. There may be a corresponding increase in blowby and a slight increase in fuel consumption.

Overhaul Options

Before Failure Overhaul

A planned overhaul before failure may be the best value for the following reasons:

- Costly unplanned downtime can be avoided.
- Many original parts can be reused according to the standards for reusable parts.
- The engine service life can be extended without the risk of a major catastrophe due to engine failure.
- The best cost/value relationship per hour of extended life can be attained.

After Failure Overhaul

If a major engine failure occurs and the engine must be removed from the hull, many options are available. An overhaul should be performed if the engine block or the crankshaft needs to be repaired.

If the engine block and/or the crankshaft are repairable, the overhaul cost should be between 40 percent and 50 percent of the cost of a new engine with a similar exchange core.

This lower cost can be attributed to three aspects:

- Specially designed Caterpillar engine features
- Cat dealer exchange components
- Caterpillar remanufactured exchange components

Overhaul Recommendation

To minimize downtime, Caterpillar recommends a scheduled engine overhaul by your Cat dealer before the engine fails. This overhaul will provide you with the best cost/value relationship.

Note: Overhaul programs vary according to the engine application and according to the dealer that performs the overhaul. Consult your Cat dealer for specific information about the available overhaul programs and about overhaul services for extending the engine life.

If an overhaul is performed without overhaul service from your Cat dealer, be aware of the following maintenance recommendations.

Rebuild or Exchange

Cylinder Head Assembly, Cylinder Packs, Oil Pump, and Fuel Transfer Pump

These components should be inspected according to the instructions that are found in various Caterpillar reusability publications. The Special Publication, SEBF8029 lists the reusability publications that are needed for inspecting the engine parts.

If the parts comply with the established inspection specifications that are expressed in the reusable parts guideline, the parts should be reused.

Parts that are not within the established inspection specifications should be dealt with in one of the following manners:

- Salvaging
- Repairing
- Replacing

Using out-of-spec parts can result in the following problems:

- Unscheduled downtime
- Costly repairs
- Damage to other engine parts
- Reduced engine efficiency
- Increased fuel consumption

Reduced engine efficiency and increased fuel consumption translate into higher operating costs. Therefore, Caterpillar recommends repairing out-of-spec parts or replacing out-of-spec parts.

Inspection and/or Replacement

Crankshaft Bearings, Valve Rotators, and Crankshaft Seals

The following components may not last until the second overhaul.

- Thrust bearings
- Main bearings
- Rod bearings
- Valve rotators
- Crankshaft seals

Caterpillar recommends the installation of new parts at each overhaul period.

Inspect these parts while the engine is disassembled for an overhaul.

Inspect the crankshaft for any of the following conditions:

- Deflection
- Damage to the journals
- Bearing material that has seized to the journals

Check the journal taper and the profile of the crankshaft journals. Check these components by interpreting the wear patterns on the following components:

- Rod bearing
- Main bearings

Note: If the crankshaft is removed for any reason, use the magnetic particle inspection process to check for cracks in the crankshaft.

Inspect the camshaft for damage to the journals and to the lobes.

Note: If the camshaft is removed for any reason, use the magnetic particle inspection process to check for cracks in the camshaft.

Inspect the following components for signs of wear or for signs of scuffing:

- Camshaft bearings
- Camshaft followers

Caterpillar recommends replacing the crankshaft vibration damper.

Oil Cooler Core and Aftercooler Core

During an overhaul, Caterpillar recommends the removal of both the oil cooler core and the aftercooler core. Clean the oil cooler core and the aftercooler core. Then, pressure test both of these cores.

NOTICE

Do not use caustic cleaners to clean the core.

Caustic cleaners can attack the internal metals of the core and cause leakage.

Note: Use this cleaning procedure to clean the oil cooler core and the aftercooler core.

1. Remove the oil cooler core and the aftercooler core.
2. Remove any debris from the oil cooler core and the aftercooler core. To remove debris from the oil cooler core, turn the oil cooler core onto one end. To remove debris from the aftercooler core, turn the aftercooler core upside-down.
3. Flush the oil cooler core and the aftercooler core internally with cleaner to loosen foreign substances. This procedure will also help to remove oil from the oil cooler core and the aftercooler core.

Note: Caterpillar recommends the use of Hydrosolv Liquid Cleaners. Table 25 lists the Hydrosolv Liquid Cleaners that are available from your Cat dealer.

Table 25

Hydrosolv Liquid Cleaners(1)		
Part Number	**Description**	**Size**
1U-5490	Hydrosolv 4165	19 L (5 US gal)
174-6854	Hydrosolv 100	19 L (5 US gal)

(1) Use a 2 to 5 percent concentration of the cleaner at temperatures up to 93°C (200°F).

4. Use steam to clean the oil cooler core and the aftercooler core. This procedure removes any remaining residue from the cleaner. Flush the fins of the oil cooler core and the aftercooler core. Remove any other trapped debris.
5. Wash the oil cooler core and the aftercooler core with hot, soapy water. Rinse the oil cooler core and the aftercooler core thoroughly with clean water.

WARNING

Personal injury can result from air pressure.

Personal injury can result without following proper procedure. When using pressure air, wear a protective face shield and protective clothing.

Maximum air pressure at the nozzle must be less than 205 kPa (30 psi) for cleaning purposes.

6. Dry the oil cooler core and the aftercooler core with compressed air. Direct the air in the reverse direction of the normal flow.
7. Inspect the components to ensure cleanliness. The oil cooler core and the aftercooler core should be pressure tested. Repair the oil cooler core and the aftercooler core, if necessary. Install the oil cooler core and the aftercooler core.

For more information about cleaning the cores, consult your Cat dealer.

Obtain Coolant Analysis

The concentration of supplemental coolant additive (SCA) should be checked regularly with test kits or with S·O·S Coolant Analysis (Level 1). Further coolant analysis is recommended when the engine is overhauled.

For example, considerable deposits are found in the water jacket areas on the external cooling system, but the concentrations of coolant additives were carefully maintained. The coolant water probably contained minerals that were deposited on the engine over time.

A coolant analysis can be conducted to verify the condition of the water that is being used in the cooling system. A full water analysis can be obtained by consulting your local water utility company or an agricultural agent. Private laboratories are also available for water analysis.

Caterpillar recommends an S·O·S Coolant Analysis (Level 2).

S·O·S Coolant Analysis (Level 2)

An S·O·S Coolant Analysis (Level 2) is a comprehensive coolant analysis which completely analyzes the coolant and the effects on the cooling system. An S·O·S Coolant Analysis (Level 2) provides the following information:

- Complete S·O·S Coolant Analysis (Level 1)
- Visual inspection of properties
- Identification of metal corrosion
- Identification of contaminants
- Identification of built up impurities (corrosion and scale)

S·O·S Coolant Analysis (Level II) provides a report of the results of both the analysis and the maintenance recommendations.

For more information about coolant analysis, see your Cat dealer.

i08173122

Power Factor - Check

SMCS Code: 4450-535-PWR

The power factor of a system can be determined by a power factor meter or by calculations. The power factor can be calculated by dividing kW by kVA. Power factor is expressed as a decimal.

i08397626

Radiator - Clean

SMCS Code: 1353-070

Note: Adjust the frequency of cleaning according to the effects of the operating environment.

Inspect the radiator for these items: damaged fins, corrosion, dirt, grease, insects, leaves, oil and other debris. Clean the radiator, if necessary.

WARNING

Personal injury can result from air pressure.

Personal injury can result without following proper procedure. When using pressure air, wear a protective face shield and protective clothing.

Maximum air pressure at the nozzle must be less than 205 kPa (30 psi) for cleaning purposes.

Pressurized air is the preferred method for removing loose debris. Direct the air in the opposite direction of the fan's air flow. Hold the nozzle approximately 6 mm (0.25 inch) away from the fins. Slowly move the air nozzle in a direction that is parallel with the tubes. This will remove debris that is between the tubes.

Pressurized water may also be used for cleaning. The maximum water pressure for cleaning purposes must be less than 275 kPa (40 psi). Use pressurized water in order to soften mud. Clean the core from both sides.

Use a degreaser and steam for removal of oil and grease. Clean both sides of the core. Wash the core with detergent and hot water. Thoroughly rinse the core with clean water.

After cleaning, start the engine. This will help in the removal of debris and drying of the core. Stop the engine. Use a light bulb behind the core in order to inspect the core for cleanliness. Repeat the cleaning, if necessary.

Inspect the fins for damage. Bent fins may be opened with a “comb”. Inspect these items for good condition: welds, mounting brackets, air lines, connections, clamps and seals. Make repairs, if necessary.

For more detailed information on cleaning and inspection, refer to Special Publication, SEBD0518, “Know Your Cooling System”.

i08265777

Rotating Rectifier - Check

SMCS Code: 4465-535

Check the exciter armature. Ensure that the rotating rectifier is tight. If a failure of a rectifier is suspected, proceed to the “Testing a Three-Diode Rectifier Block” section.

Testing a Three-Diode Rectifier Block

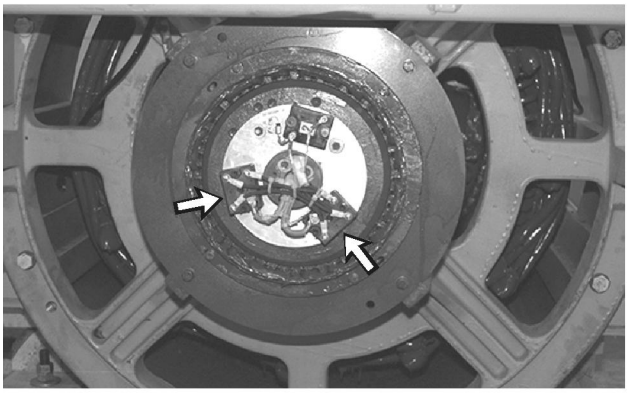

Illustration 83 g00610240

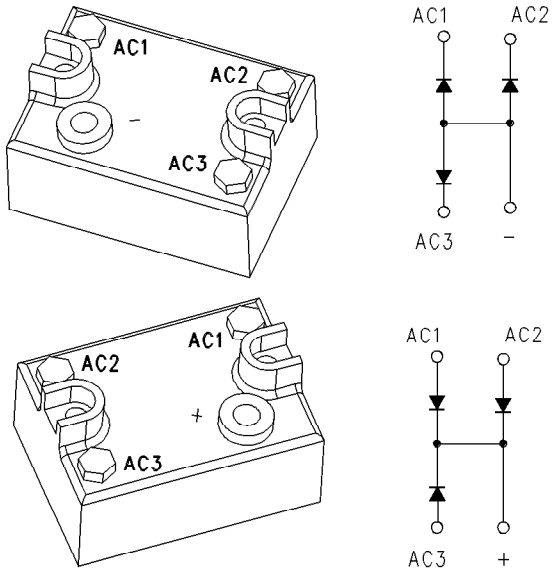

Illustration 84 g00613971

Three-Diode Rectifier Block (two pieces)

The following procedure tests all three diodes within a block. Check the positive rectifier block and the negative rectifier block. If any meter reading does not fall within the given ranges, replace the rectifier block.

1. Set the digital multimeter on the diode range. Remove all leads from the rectifier block.
2. To test the negative rectifier block, follow these steps:
   a. Place the red test lead on the negative “-” terminal. Place the black test lead on the following rectifier terminals: “AC1” (3), “AC2” (4), and “AC3” (5). All readings on the meter should be between 0.4 and 1.0.
   b. Place the black test lead on the negative “-” terminal. Place the red test lead on the following rectifier terminals: “AC1” (3), “AC2” (4), and “AC3” (5). In all cases, the meter should read “OL” (overload).
3. To test the positive rectifier block, follow these steps:
   a. Place the red test lead on the positive “+” rectifier terminal. Place the black test lead on the following rectifier terminals: “AC1” (3), “AC2” (4), and “AC3” (5). In all cases, the meter should read “OL” (overload).
   b. Place the black test lead on the positive “+” rectifier terminal. Place the red test lead on the following rectifier terminals: “AC1” (3), “AC2” (4), and “AC3” (5). All readings on the meter should be between 0.4 and 1.0.

Note: A shorted diode can damage the exciter rotor. If a diode is shorted, check the exciter rotor. Refer to the Testing and Adjusting, “Winding - Test” and Testing and Adjusting, “Insulation - Test”. Perform these tests.

Note: This rectifier block also contains varistor “CR7” . “CR7” can be checked by measuring the resistance between the positive “+” rectifier terminal and the negative “-” rectifier terminal. The resistance should be a minimum of 15000 ohms.

i08361465

Rotating Rectifier - Check

SMCS Code: 4465-535

WARNING

The high voltage that is produced by an operating generator set can cause severe injury or death. Before performing any maintenance or repairs, ensure that the generator will not start.

Place the engine control switch in the “OFF” position. Attach “DO NOT OPERATE” tags to all starting controls. Disconnect the batteries or disable the starting system. Lock out all switchgear and automatic transfer switches that are associated with the generator.

Check the exciter armature. Ensure that the rotating rectifier is tight. If a failure of a rectifier is suspected, refer to Maintenance Procedure, “Rotating Rectifier - Test”.

i08755487

Standby Generator Set Maintenance Recommendations

SMCS Code: 4450-041

A standby generator set may be intermittently used. However, the generator set is needed for operation in an emergency situation. Maintenance of the standby generator set is important for the following reasons:

- The generator set must always be in excellent operating condition.
- The generator set must be ready to work under load at any time.

Establishing a Preventive Maintenance Program will provide these benefits:

- Maximum availability of the standby generator set
- Longer service life for the generator set
- Minimum of expensive repairs

Your Cat dealer can help you to establish an effective Preventive Maintenance Program for your generator set. Consult your Cat dealer for details.

Maintenance and Operation Procedures

WARNING

The high voltage that is produced by an operating generator set can cause severe injury or death. Before performing any maintenance or repairs, ensure that the generator will not start.

Place the engine control switch in the "OFF" position. Attach "DO NOT OPERATE" tags to all starting controls. Disconnect the batteries or disable the starting system. Lock out all switchgear and automatic transfer switches that are associated with the generator.

The recommended maintenance for the generator set is listed in this Operation and Maintenance Manual, "Maintenance Interval Schedule (Standby Generator Sets)" (Maintenance Section).

Maintenance and Repair

The maintenance that is recommended for Every Week can be performed by an authorized operator. The maintenance that is recommended for the subsequent maintenance intervals must be performed by an authorized service technician or by your Cat dealer.

Unless other instructions are provided, perform maintenance and repairs under the following conditions:

- The engine is stopped.
- The starting system is disabled.
- The generator does not pose an electrical shock hazard.
- The generator is disconnected from the load.

Operation

To ensure proper operation, the generator set must be exercised regularly. For instructions on operating the generator set, see the Operation and Maintenance Manual for the generator set control panel.

For these operation procedures, follow the instructions that are provided in this Operation and Maintenance Manual, "Operation Section": starting the engine, engine operation and stopping the engine.

Record Keeping

Maintain a record to document these items: gauge readings, maintenance that is performed, problems, and repairs.

Space Heaters

Moisture can damage generators and other electrical equipment. Make every effort to keep the generator set as dry as possible.

Generators can operate without problems in humid environments. However, problems can occur when the generator is inactive. Moisture can condense on the windings. This condition can result in poor performance. Also, damage to the windings can occur.

Use space heaters to help keep the windings dry. When the generator is not active, ensure that the space heaters are operating. When the generator is operating, turn OFF the space heaters.

i00651416

Starting Motor - Inspect

SMCS Code: 1451-040; 1453-040

Caterpillar Inc. recommends a scheduled inspection of the starting motor. If the starting motor fails, the engine may not start in an emergency situation.

Check the starting motor for proper operation. Check the electrical connections and clean the electrical connections. Refer to the Service Manual for more information on the checking procedure and for specifications or consult your Caterpillar dealer for assistance.

i08265790

Stator Lead - Check

SMCS Code: 4459-535

Ensure that the stator output leads are routed out of the generator in a manner that prevents the leads from rubbing against metal objects.

Visually inspect the following areas for cracking and physical damage:

- stator output leads
- protective sleeving
- insulation

i08705298

Turbocharger - Inspect

SMCS Code: 1052-040

Periodic inspection and cleaning are recommended for the turbocharger compressor housing (inlet side).

If the turbocharger or charge air system pipework/ hoses or air to air cooler (ATAAC) fails during engine operation, damage to the turbocharger compressor wheel and/or to the engine may occur. Damage to the turbocharger compressor wheel can damage the pistons, valves, and cylinder head.

NOTICE

Failure of turbocharger bearings and seals can cause large quantities of oil to enter the air inlet and exhaust systems. Loss of engine lubricant can result in serious engine damage.

Minor leakage of a turbocharger housing under extended low idle operation should not cause problems as long as a turbocharger bearing failure has not occurred.

When a turbocharger bearing failure is accompanied by a significant engine performance loss (exhaust smoke or engine rpm up at no load), do not continue engine operation until the turbocharger is repaired or replaced.

Inspection of the entire air system must be performed to avoid subsequent turbocharger failures, and contingent engine damage.

Boost leaks are off particular concern. Boost leaks could result in excessive combustion temperatures. Inspect air system components, elbows and metal pipework for cracks on welds, the hoses for damage and loose hose clamps, replace charge air V clamps, pressure test air to air cooler (ATAAC) to verify no leaks. All internal surfaces must be free of oil and debris.

An inspection of the turbocharger can minimize unscheduled downtime. An inspection of the turbocharger can also reduce the chance for potential damage to other engine parts.

Note: Turbocharger components require precision clearances. The turbocharger cartridge must be balanced due to high rpm. Severe Service Applications can accelerate component wear. Severe Service Applications require more frequent inspections of the cartridge.

Removal and Installation

For options regarding the removal, installation, repair, and replacement, consult your Cat dealer. Refer to the Service Manual for this engine for the procedure and specifications.

Cleaning and Inspecting

1. Remove the exhaust outlet piping and remove the air inlet piping from the turbocharger. Visually inspect the piping for the presence of oil. Clean the interior of the pipes to prevent dirt from entering during reassembly.
2. Turn the compressor wheel and the turbine wheel by hand. The assembly should turn freely. Inspect the compressor wheel and the turbine wheel for contact with the turbocharger housing. There should not be any visible signs of contact between the turbine wheel or compressor wheel and the turbocharger housing. If there is any indication of contact between the rotating turbine wheel or the compressor wheel and the turbocharger housing, the turbocharger must be reconditioned.
3. Check the compressor wheel for cleanliness. If only the blade side of the wheel is dirty, dirt and/or moisture is passing through the air filtering system. If oil is found only on the back side of the wheel, there is a possibility of a failed turbocharger oil seal.

   The presence of oil may be the result of extended engine operation at low idle. The presence of oil may be the result of a restriction in the air inlet line. This restriction can cause the turbocharger to slobber.
4. Inspect the bore of the turbine housing for corrosion.
5. Clean the turbocharger housing with standard shop solvents and a soft bristle brush.
6. Fasten the air inlet piping and the exhaust outlet piping to the turbocharger housing.

i08246338

Varistor - Check

SMCS Code: 4466-535

The varistor must be checked at regular intervals. Refer to Systems Operation/Testing and Adjusting, KENR5284, “Varistor - Test” for instructions.

i08265808

Varistor - Inspect

SMCS Code: 4466-040

The varistor must be visually inspected at regular intervals. For generator sets with 1400 or with 1600 frames, discoloration of the varistor indicates that replacement of the varistor is necessary. For generator sets with 1800 frames, physical signs of failure indicate that replacement of the varistor is necessary.

i08246091

Voltage and Frequency - Check

SMCS Code: 4450-535-EL

Check for proper voltage and frequency setting. Check for stability.

Refer to the generator set serial number plate for correct voltage and frequency.

i02378188

Walk-Around Inspection

SMCS Code: 1000-040

Inspect the Engine for Leaks and for Loose Connections

A walk-around inspection should only take a few minutes. When the time is taken to perform these checks, costly repairs and accidents can be avoided.

For maximum engine service life, make a thorough inspection of the engine compartment before starting the engine. Look for items such as oil leaks or coolant leaks, loose bolts, worn belts, loose connections and trash buildup. Make repairs, as needed:

- The guards must be in the proper place. Repair damaged guards or replace missing guards.
- Wipe all caps and plugs before the engine is serviced in order to reduce the chance of system contamination.

NOTICE
For any type of leak (coolant, lube, or fuel) clean up the fluid. If leaking is observed, find the source and correct the leak. If leaking is suspected, check the fluid levels more often than recommended until the leak is found or fixed, or until the suspicion of a leak is proved to be unwarranted.

NOTICE
Accumulated grease and/or oil on an engine or deck is a fire hazard. Remove this debris with steam cleaning or high pressure water.

- Ensure that cooling lines are properly clamped. Check for leaks. Check the condition of all pipes.
- Inspect the water pump for coolant leaks.

Note: The water pump seal is lubricated by coolant in the cooling system. It is normal for a small amount of leakage to occur as the engine cools down and the parts contract.

Excessive coolant leakage may indicate the need to replace the water pump seal. For the removal of water pump and the installation of water pump and/or seals, refer to the Service Manual for the engine or consult your Caterpillar dealer.

- Inspect the lubrication system for leaks at the front crankshaft seal, the rear crankshaft seal, the oil pan, the oil filters and the valve cover.
- Inspect the fuel system for leaks. Look for loose fuel line clamps.
- Inspect the piping for the air inlet system and the elbows for cracks and for loose clamps.
- Inspect the alternator belt and the accessory drive belts for cracks, breaks or other damage.

Belts for multiple groove pulleys must be replaced as matched sets. If only one belt is replaced, the belt will carry more load than the belts that are not replaced. The older belts are stretched. The additional load on the new belt could cause the belt to break.

- Drain the water and the sediment from fuel tanks on a weekly basis in order to ensure that only clean fuel enters the fuel system.
- Inspect the wiring and the wiring harnesses for loose connections and for worn wires or frayed wires.
- Inspect the ground strap for a good connection and for good condition.
- Inspect the engine-to-frame ground strap for a good connection and for good condition.
- Disconnect any battery chargers that are not protected against the current drain of the starting motor. Check the condition and the electrolyte level of the batteries, unless the engine is equipped with a maintenance free battery.
- Check the condition of the led indicators. Replace any led indicators which are cracked.

Inspect the Insulation

A visual inspection should be initially directed at the areas that are most prone to damage and deterioration. The most prone areas to damage and deterioration are listed below:

- Ground Insulation. Ground insulation is insulation that is intended to isolate components that are carrying current from components that are not carrying current.

- Support Insulation. Support insulation is usually made from one of the following items: a compressed lamination of fibrous materials, polyester, or felt pads that have been impregnated with various types of bonding agents.

There are many different types of damage that can occur in these areas. Several of the different types of damage are listed below:

Thermal Aging – Thermal aging can cause the degradation of insulation or the deterioration of insulation. An examination of the coils may reveal that the insulation has expanded into the ventilation ducts. This is the result of a loss of bond which will cause the insulation material to separate. The insulation material could also separate from the conductors on the windings.

Abrasion – The surfaces of coils and the surfaces of connectors may be damaged by abrasion. These surfaces may also be damaged by contamination from other sources. An example of these sources would be chemicals or abrasive substances.

Cracking – Cracking of insulation may result from mechanical stress. The structure that is used to brace the stator winding will become loose if the problem is not corrected. Further mechanical damage or electrical damage may also result.

Erosion – Erosion can be caused when foreign substances rub against the surfaces of the insulation.

i08273264

Water Pump - Inspect

SMCS Code: 1361-040

A failed water pump might cause severe engine overheating problems that could result in the following conditions:

- Cracks in the cylinder head
- A piston seizure
- Other potential damage to the engine

A failed water pump might cause severe engine overheating problems. Overheating could result in cracks in the cylinder head, a piston seizure, or other potential damage to the engine.

Visually inspect the water pump for leaks. If leaking of the water pump seals is observed, replace all water pump seals. Refer to two articles in the Disassembly and Assembly Manual, “Water Pump - Disassemble and Water Pump - Assemble” for the disassembly and assembly procedure. If necessary to remove the water pump, refer to two articles in the Disassembly and Assembly Manual, “Water Pump - Remove and Water Pump - Install”.

Inspect the water pump for wear, cracks, pin holes, and proper operation. Refer to the Parts Manual for the correct part numbers for your engine or consult your Cat dealer if repair is needed or replacement is needed.

Warranty Section

Warranty Information

i08769122

Emissions Warranty Information

SMCS Code: 1000

The certifying engine manufacturer warrants to the ultimate purchaser and each subsequent purchaser that:

1. New non-road diesel engines and stationary diesel engines less than 10 L per cylinder (including Tier 1 and Tier 2 marine engines < 37 kW, but excluding locomotive and other marine engines) operated and serviced in the United States and Canada, including all parts of their emission control systems (“emission related components”), are:

a. Designed, built, and equipped so as to conform, at the time of sale, with applicable emission standards prescribed by the United States Environmental Protection Agency (EPA) by way of regulation.

b. Free from defects in materials and workmanship in emission-related components that can cause the engine to fail to conform to applicable emission standards for the warranty period.

2. New non-road diesel engines (including Tier 1 and Tier 2 marine propulsion engines < 37 kW and Tier 1 through Tier 4 marine auxiliary engines < 37 kW, but excluding locomotive and other marine engines) operated and serviced in the state of California, including all parts of their emission control systems (“emission related components”), are:

a. Designed, built, and equipped so as to conform, at the time of sale, to all applicable regulations adopted by the California Air Resources Board (ARB).

b. Free from defects in materials and workmanship which cause the failure of an emission-related component to be identical in all material respects to the component as described in the engine manufacturer's application for certification for the warranty period.

3. New non-road diesel engines installed in construction machines conforming to the South Korean regulations for construction machines manufactured after January 1, 2015, and operated and serviced in South Korea, including all parts of their emission control systems (“emission related components”), are:

a. Designed, built, and equipped so as to conform, at the time of sale, with applicable emission standards prescribed in the Enforcement Rule of the Clean Air Conservation Act promulgated by South Korea MOE.

b. Free from defects in materials and workmanship in emission-related components that can cause the engine to fail to conform to applicable emission standards for the warranty period.

4. New China non-road 4 mobile diesel engines operated and serviced in China, including all parts of their emission control systems (“emission related components”), are:

a. Designed, built, and equipped so as to conform, at the time of manufacture, sale, and import with applicable emission standards in the promulgated by Enforcement Rule of the Clean Air Conservation Act Ministry of Ecology and Environment (MEE).

b. Free from defects in materials and workmanship in emission-related components that can cause the engine to fail to conform to applicable emission standards for the warranty period.

A detailed explanation of the Emission Control Warranty that is applicable to new non-road and stationary diesel engines, including the components covered and the warranty period, is found in the Emission Control Warranty statement available at the Cat Warranty website. Consult your authorized Cat dealer to determine if your engine is subject to an Emission Control Warranty, and to obtain a copy of the applicable warranty publication.

Reference Information Section

Engine Ratings

i08274659

Engine Rating Conditions

SMCS Code: 1000

All engine ratings are in compliance with the following standard ambient air conditions of “SAE J1349”:

- 99 kPa (29.3 inches of Hg)
- 30 percent relative humidity
- A temperature of 25 °C (77 °F)

Ratings relate to the standard conditions of “ISO8665”, of “ISO3046/1”, of “DIN6271”, and of “BS5514”.

The engine ratings are based on the following fuel specifications:

- Low heat value (LHV) of the fuel of 42 780 kJ/kg (18,390 Btu/lb) at 29 °C (84 °F)
- Gravity (API) of 35 degrees at 15 °C (60 °F)
- Specific gravity of .849 at 15 °C (60 °F)
- Density of 850 kg/m^3 (7.085 lb/US gal)

The engine ratings are gross output ratings.

Gross Output Ratings – The total output capability of the engine that is equipped with standard accessories.

Standard accessories include the following components:

- Oil pumps
- Fuel pumps
- Water pumps

Subtract the power that is required to drive auxiliary components from the gross output. This action will produce the net power that is available for the external load (flywheel).

i00681146

Engine Rating Definitions

SMCS Code: 1000

Ratings for Generator Set Engines

The engine ratings that are listed below have a manufacturing tolerance of plus three percent or minus three percent.

Standby Rating

- Typical load factor of 60 percent or less
- 100 typical operating hours per year
- Typical applications with standby service for building services with an enclosed environment
- 80 percent typical peak demand of the standby rated kW
- 100 percent of the rated kW for the duration of an emergency outage

Prime Rating

- Typical load factor of 60 percent to 70 percent
- No limit to typical operating hours
- Typical peak demand at 100 percent of the continuous rated kW for less than 10 percent of the total operating hours

Some typical applications include the following operations:

- industrial
- pumping
- construction
- peak shaving
- cogeneration

NOTICE
Operating a generator set engine above the rating definitions will result in a shorter engine service life before overhaul.

Customer Service

i08234815

Customer Assistance

SMCS Code: 1000; 4450

USA and Canada

If a problem arises concerning the operation or service of an engine, the problem will be managed by the dealer in your area.

Your satisfaction is a primary concern to Caterpillar and to Cat dealers. If you have a problem that has not been handled to your complete satisfaction, follow these steps:

1. Discuss your problem with a manager from the dealership.

2. If your problem cannot be resolved at the dealer without additional assistance, use the phone number below to talk with a Field Service Coordinator:

1-800-447-4986

The normal hours are from 8:00 to 4:30 Monday through Friday Central Standard Time.

3. If your needs have not been met still, submit the matter in writing to the following address:

Caterpillar Inc.
Electric Power North America
Attn: Product Support Manager
AC 6109
Mossville, Illinois 61552

Keep in mind: probably, your problem will ultimately be solved at the dealership, using the dealership facilities, equipment, and personnel. Therefore, follow the steps in sequence when a problem is experienced.

Outside of USA and of Canada

If a problem arises outside of USA and outside Canada, and if the problem cannot be resolved at the dealer level, consult the appropriate Caterpillar office.

Latin America, Mexico, Carribean
Caterpillar Americas Co.
701 Waterford Way, Suite 200
Miami, FL 33126-4670
USA
Phone: 305-476-6800
Fax: 305-476-6801

Europe, Africa, and Middle East
Caterpillar Overseas S.A.
76 Route de Frontenex
P.O. Box 6000
CH-1211 Geneva 6
Switzerland
Phone: 22-849-4444
Fax: 22-849-4544

Far East
Caterpillar Asia Pte. Ltd.
7 Tractor Road
Jurong, Singapore 627968
Republic of Singapore
Phone: 65-662-8333
Fax: 65-662-8302

China
Caterpillar China Ltd.
37/F., The Lee Gardens
33 Hysan Avenue
Causeway Bay
G.P.O. Box 3069
Hong Kong
Phone: 852-2848-0333
Fax: 852-2848-0440

Japan
Caterpillar Japan Ltd.
SBS Tower
10-1, Yoga 4-Chome
Setagaya-Ku, Tokyo 158-8530
Japan
Phone: 81-3-5717-1150
Fax: 81-3-5717-1177

Australia and New Zealand
Caterpillar of Australia Ltd.
1 Caterpillar Drive
Private Mail Bag 4
Tullamarine, Victoria 3043
Australia
Phone: 03-9953-9333
Fax: 03-9335-3366

i08292376

Ordering Replacement Parts

SMCS Code: 4450; 7567

WARNING

When replacement parts are required for this product Caterpillar recommends using Caterpillar replacement parts or parts with equivalent specifications including, but not limited to, physical dimensions, type, strength and material.

Failure to heed this warning can lead to premature failures, product damage, personal injury or death.

Quality Cat replacement parts are available from Cat dealers throughout the world. Cat dealer parts inventories are up to date. The parts stocks include all the parts that are normally needed to protect your Cat engine investment.

When you order parts, specify the following information:

- Part number
- Part name
- Quantity

If there is a question concerning the part number, provide your dealer with a complete description of the needed item.

When a Cat engine requires maintenance and/or repair, provide the dealer with all the information that is stamped on the Information Plate. This information is described in this Operation and Maintenance Manual (Product Information Section).

Discuss the problem with the dealer. Inform the dealer about the conditions of the problem and the nature of the problem. Inform the dealer about when the problem occurs. This information will help the dealer in troubleshooting the problem and solving the problem faster.

Reference Materials

i08530562

Maintenance Records

SMCS Code: 1000; 4450

Caterpillar recommends the retention of accurate maintenance records. Accurate maintenance records can be used for the following purposes:

- Determine operating costs.
- Establish maintenance schedules for other engines that are operated in the same environment.
- Show compliance with the required maintenance practices and maintenance intervals.

Maintenance records can be used for various other business decisions that are related to engine maintenance.

Maintenance records are a key element of a maintenance program that is managed. Accurate maintenance records can help your Cat dealer to fine-tune the recommended maintenance intervals to meet the specific operating situation. These recommendations should result in a lower engine operating cost.

Records should be kept for the following items:

Fuel Consumption – A record of fuel consumption is essential to determine when the load sensitive components should be inspected or repaired. Fuel consumption assists in determining overhaul intervals.

Service Hours – A record of service hours is essential to determine when the speed sensitive components should be inspected or repaired.

Documents – These items should be easy to obtain, and these items should be kept in the engine history file. All documents should show this information: date, service hours, fuel consumption, unit number, and engine serial number. The following types of documents should be kept as proof of maintenance or repair for warranty:

Keep the following types of documents as proof of maintenance for warranty. Also, keep these types of documents as proof of repair for warranty:

- Dealer work orders and itemized bills
- Owner repair costs
- Owner receipts
- Maintenance log

i08254037

Maintenance Log

SMCS Code: 1000; 4450

Table 26

Engine Model	**Customer Identifier**
Serial Number	**Arrangement Number**

Service Hours	Quantity Of Fuel	Service Item	Date	Authorization

i08292374

Reference Material

SMCS Code: 1000; 4450

Additional literature regarding your product may be purchased from your local Cat dealer or by visiting publications.cat.com. Use the product name, sales model, and serial number to obtain the correct information for your product.

publications.cat.com

i08292382

Decommissioning and Disposal

SMCS Code: 1000

When the product is removed from service, local regulations for the product decommissioning will vary. Disposal of the product will vary with local regulations.

Improperly disposing of waste can threaten the environment. Obey all local regulations for the decommissioning and disposal of materials.

Utilize appropriate personal protective equipment when decommissioning and disposing product.

Consult the nearest Cat dealer for additional information. Including information for component remanufacturing and recycling options.

Index

A

After Starting Engine 66
Engaging the Generator 67
Warm-up 66
After Stopping Engine 82
Alarms and Shutoffs 46
Alternator - Inspect 101
Automatic Start/Stop - Inspect 101

B

Battery - Recycle 101
Battery - Replace 101
Battery Charger - Check 102
Checking After Stopping 102
Checking Before Start-Up 102
Battery Disconnect Switch (If Equipped) 46
Battery Electrolyte Level - Check 102
Battery or Battery Cable - Disconnect 103
Before Starting Engine 23, 63
Belts - Inspect/Adjust/Replace 103–104
Alternator Belt Adjustment 104
Inspect 104
Inspection 103
Replace (Serpentine Belt) 104
Replacement 104
Burn Prevention 20
Batteries 21
Coolant 20
Oils 21

C

Cold Start Strategy 47
Cold Weather Operation 78
Cold Weather Starting 63
Starting With the Starting Aid Switch (If Equipped) 64
Configuration Parameters 57
Parameter Descriptions 57
Parameter Table 59
Control Panel 48
DSE2548 Expansion Module 52
GCCP1.2 (If Equipped) 48
GCCP1.3 (If Equipped) 50
Coolant (DEAC) - Change 105
Cooling Systems with Heavy Deposits or Plugging 106
Drain 105
Fill 106
Flush 105
Coolant (ELC) - Change 107
Drain 107
Fill 107
Flush 107
Coolant Extender (ELC) - Add 108
Coolant Level - Check 108
Coolant Sample (Level 1) - Obtain 109
Sampling Conditions 109
Timing of the Sampling 110
Coolant Sample (Level 2) - Obtain 110
Coolant Temperature Regulator - Replace 111
Cooling System Supplemental Coolant Additive (SCA) - Test/Add 111
Maintain the Proper Concentration of SCA in the Coolant 112
Crankshaft Vibration Damper - Inspect 112
Inspection 112
Removal and Installation 113
Crushing Prevention and Cutting Prevention 22
Customer Assistance 149
Outside of USA and of Canada 149
USA and Canada 149
Customer Service 149

D

Declaration of Conformity (European Union) 38
Declaration of Conformity (Great Britain) 37
Decommissioning and Disposal 153

E

Electrical Connections - Check 113
Electrical System 24
Grounding Practices 25
Emergency Stopping 80
Emergency Stop Button 80
Emissions Certification Film 39
Emissions Warranty Information 147
Engine - Clean 113
Engine Air Cleaner Element (Dual Element) - Inspect/Clean/Replace (If Equipped) 114
Cleaning the Primary Air Cleaner Elements 114
Servicing the Air Cleaner Elements 114
Engine Air Cleaner Service Indicator - Inspect 116

Inspect and Clean the Indicator.....116
Test the Service Indicator 116
Engine Crankcase Breather - Clean 117
Engine Diagnostics 56
Engine Electronics..... 25
Engine Mounts - Inspect.....118
Engine Oil and Filter - Change 119
Drain the Engine Oil..... 120
Fill the Engine Crankcase..... 120
Replace the Oil Filter 120
Engine Oil Level - Check.....118
Engine Oil Sample - Obtain.....119
Obtain the Sample and the Analysis 119
Engine Operation 68
Engine Operation (Hydrocarbon Mitigation) ... 68
Hydrocarbon Mitigation..... 68
Partial Load Operation..... 69
Engine Operation with Active Diagnostic Codes 56
Engine Operation with Intermittent Diagnostic Codes 56
Engine Performance - Test (Standby Generator Sets)..... 121
Engine Protective Devices - Check..... 122
Visual Inspection..... 123
Engine Rating Conditions..... 148
Engine Rating Definitions..... 148
Ratings for Generator Set Engines 148
Engine Ratings 148
Engine Speed/Timing Sensor - Clean/ Inspect 123
Engine Starting..... 24, 63
Ether 24
Engine Stopping..... 24, 80
Engine Valve Lash - Check 123

F

Fault Logging..... 56
Features and Controls..... 46
Film (Product Identification) - Clean..... 124
Cleaning of the Films 124
Fire Prevention and Explosion Prevention..... 21
Fire Extinguisher..... 22
Lines, Tubes, and Hoses 22
Fluid Recommendations 84
Cooling System..... 88
Diesel Engine Oil 84
Fuel 86
Greases 90
Foreword 4
California Proposition 65 Warning 4
Literature Information 4
Maintenance 4
Maintenance Intervals 5
Operation 4
Overhaul 5
Safety..... 4
Fuel and the Effect from Cold Weather..... 78
Fuel Conservation Practices 69
Fuel Related Components in Cold Weather ... 78
Fuel Filters 78
Fuel Heaters 79
Fuel Tanks 78
Fuel System - Prime..... 125
Fuel System Primary Filter (Water Separator) Element - Replace..... 126
Fuel System Primary Filter/Water Separator - Drain 127
Fuel Tank Water and Sediment - Drain 127
Drain the Water and the Sediment 127
Fuel Storage Tanks..... 128
Fuel Tank 127

G

General Hazard Information..... 16
Containing Fluid Spillage..... 18
Dispose of Waste Properly 20
Fluid Penetration 18
Inhalation 19
Lines, Tubes, and Hoses 18
Pressurized Air and Water..... 17
Softwrap..... 20
Static Electricity Hazard when Fueling with Ultra-low Sulfur Diesel Fuel 18
General Information 27
General Maintenance Information..... 92
Generator - Dry..... 128
Circulating Current..... 130
External Heat 129
Internal Heating 130
Generator - Inspect 130
Cleaning (Assembled Generators)..... 130
Cleaning (Disassembled Generators)..... 131
Generator Bearing - Inspect..... 131
Generator Bearing - Lubricate..... 131
Generator Bearing - Replace 131
Generator Bearing Temperature - Test/ Record 132
Infrared Thermometers..... 132
Generator Isolating for Maintenance..... 25

Generator Lead (Round Cable) - Check (If Equipped) 132
Generator Load - Check 132
Generator Operation 70
Block Loading 70
Excitation Systems 71
Generator Options 71
Loading of the Generator 70
Low Idle Adjustment 71
Power Factor 71
Standby Generator Sets 71
Generator Set - Test 133
Generator Set Alignment - Check 134
Generator Set Intended for Stationary Use Only 39
Generator Set Vibration - Inspect 134
Generator Set Vibration - Test/Record 135
Generator Start-up Checklist 94

H

Hoses and Clamps - Inspect/Replace 135
Inspect Tubes, Hoses, Bellows, and Clamps 135
Replace the Hoses and the Clamps 136

I

Important Safety Information 2
Installation 44

J

Jacket Water Heater - Check 138

L

Lifting and Storage 40

M

Maintenance Interval Schedule 99
Commissioning 100
Every 250 Service Hours 99
Every 3 Years 100
Every 6 Months 99
Every Week 99
Every Year 99
Overhaul 100
When Required 99
Maintenance Log 152
Maintenance Recommendations 92
Maintenance Records 151
Maintenance Section 83
Manual Stop Procedure 81
Model View Illustrations 27
Mounting and Dismounting 22

O

Operation Section 40
Ordering Replacement Parts 150
Overhaul Considerations 138
Oil Consumption as an Overhaul Indicator 138
Overhaul Recommendation 138
Overspeed 52

P

Parallel Operation 73
Plate Locations and Film Locations 32
Engine Identification 32
Engine Information Plate (2) 32
Engine Serial Number Plate (1) 32
Eurasian Economic Union 36
Generator Serial Number Plate and Information Plate (3) 32
Rating Plate 34
Regional Product Marking (If Equipped) 35
Serial Number Plate for the Genset (4) 34
Sound Certification 36
Power Factor - Check 140
Product Description 29
Aftermarket Products and Caterpillar Engines 31
Engine Information 29
Generator Description 30
Intended Use 29
Product Identification Information 32
Product Information Section 27
Product Installation 44
Assembly Instructions for Partially Completed Machinery 44
Batteries 45
Bearing Inspection 44
Load Connections - Generator Set Output 45
Location 44
Receiving Inspection 44
Storage 44
Unpacking and Storage 44
Product Lifting 40
Product Storage 40
Additional Information 43
Engine 40

Generator 42

R

Radiator - Clean 141
Reference Information 39
Record for Reference 39
Reference Information Section 148
Reference Material 153
Reference Materials 151
Refill Capacities 83
Cooling System 83
Diesel Engine Oil 83
Rotating Rectifier - Check 141–142
Testing a Three-Diode Rectifier Block 141

S

Safety Messages 6
Automatic Starting (2) 14
Crush Falling Object (3) 14
Electrical Shock (7) 16
Electrocution (4) 15
Hot Fluid Under Pressure (6) 15
Hot Surface (5) 15
Universal Warning (1) 13
Safety Section 6
Sensors and Electrical Components 53
Coolant Temperature Sensor 55
Engine Speed/Timing Sensors 54
Failure of Sensors 54
Inlet Air Temperature Sensor 54
Sensor Locations 53
Severe Service Application 97
Improper Maintenance Procedures (Maintenance Procedures Which May Contribute to a Severe Service Application) 97
Severe Environmental Factors 97
Severe Operating Conditions 97
Single Unit Operation 72
Adjust the Voltage 72
Initial Start-Up 72
Starting 72
Stopping 72
Sound Information 23
Sound Level Information for Products Required by the Applicable Regional Regulations 23
Standby Generator Set Maintenance Recommendations 142
Maintenance and Operation Procedures .. 143
Starting Motor - Inspect 143
Starting the Engine (DSE6310 and DSE6320 Control Modules) 64
Starting with Jump Start Cables 66
Stator Lead - Check 143
Stopping the Engine 80
System Pressure Release 92
Coolant System 92
Engine Oil 93
Fuel System 92

T

Table of Contents 3
Turbocharger - Inspect 143
Cleaning and Inspecting 144
Removal and Installation 144

V

Varistor - Check 144
Varistor - Inspect 144
Voltage and Frequency - Check 145
Voltage Regulators 73
D350 Digital Voltage Regulator 73

W

Walk-Around Inspection 145
Inspect the Engine for Leaks and for Loose Connections 145
Inspect the Insulation 145
Warranty Information 147
Warranty Section 147
Water Pump - Inspect 146
Welding on Engines with Electronic Controls 93

Product and Dealer Information

Note: For product identification plate locations, see the section “Product Identification Information” in the Operation and Maintenance Manual.

Delivery Date: _____

Product Information

Model: _____

Product Identification Number: _____

Engine Serial Number: _____

Transmission Serial Number: _____

Generator Serial Number: _____

Attachment Serial Numbers: _____

Attachment Information: _____

Customer Equipment Number: _____

Dealer Equipment Number: _____

Dealer Information

Name: _____ Branch: _____

Address: _____

_____

_____

	Dealer Contact	Phone Number	Hours
Sales:			
Parts:			
Service:			

M0112246
©2023 Caterpillar
All Rights Reserved

CAT, CATERPILLAR, LET'S DO THE WORK, their respective logos, "Caterpillar Corporate Yellow", the "Power Edge" and Cat "Modern Hex" trade dress as well as corporate and product identity used herein, are trademarks of Caterpillar and may not be used without permission.